SERVICE PARTS CATALOGUE
LISTE DE PIECES DE RECHANGE
ERSATZTEILLISTE
CATALOGO PEZZI DI RICAMBIO
ONDERDELENLIJST

NEW HOLLAND

MODELS 8070 - 8080 COMBINE

Valid from machine
Valable à partir de la machine
Gültig ab Machine
Valido a partire dalla macchina
Geldig vanaf machine
} No. 4214001 (8070)
No. 4113001 (8080)

ISSUE 497108 3 (Incl. PB1)

QUALITY PARTS

SERVICE PARTS CATALOGUE
LISTE DE PIECES DE RECHANGE
ERSATZTEILLISTE
CATALOGO PEZZI DI RICAMBIO
ONDERDELENLIJST

MODELS 8070-8080 COMBINE

VALID FROM MACHINE
VALABLE A PARTIR DE LA MACHINE
GÜLTIG AB MASCHINE
VALIDO A PARTIRE DALLA MACCHINA
GELDIG VANAF MACHINE
} No. 4214001 (8070)
No. 4113001 (8080)

REPLACES ISSUES
REMPLACE EDITIONS
ERSETZT AUSGABEN
SOSTITUISCE EDIZIONI
VERVANGT UITGAVEN
} 496917 - 496960 (8070)
496919 - 496964 (8080)
496999 - 497035 - 497065 1(8070 -8080)
497070 2 (8070 - 8080)

ISSUE 497108 3

NEW HOLLAND
B-8210 ZEDELGEM — BELGIUM
Tel. 050/20 00 20
Telegr. NEWHOLZED
Telex 81127 & 81377

© 1976 NEW HOLLAND N.V.

https://michelroger.be

GROUP
GROUPE
GRUPPE
GRUPPO
GROEP

1 ▶ 9

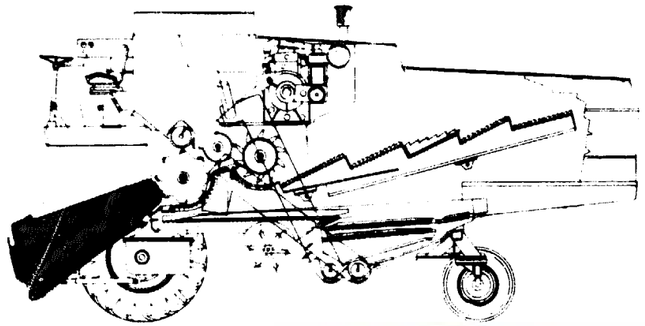

GROUP
GROUPE
GRUPPE
GRUPPO
GROEP

10 ▶ 26

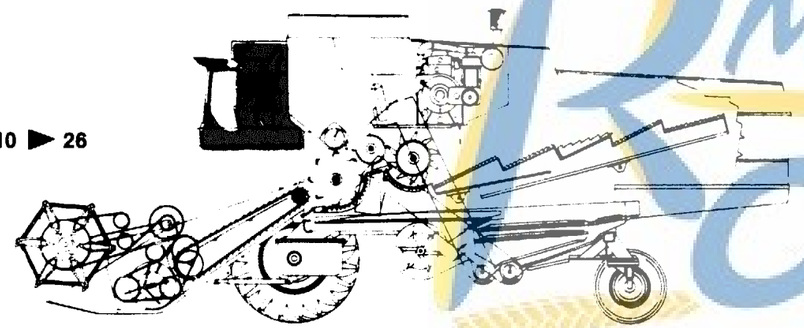

GROUP
GROUPE
GRUPPE
GRUPPO
GROEP

27 ▶ 43

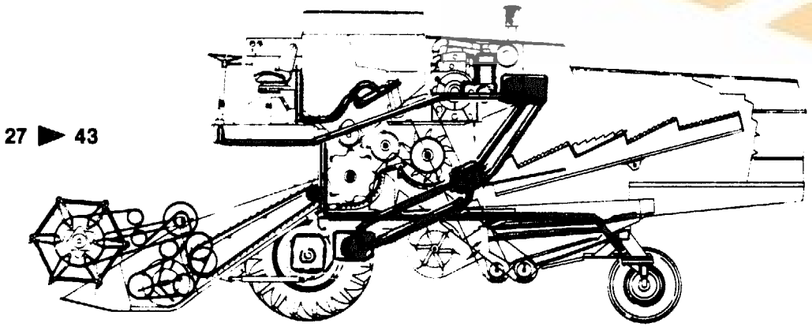

GROUP
GROUPE
GRUPPE
GRUPPO
GROEP

44 ▶ 53

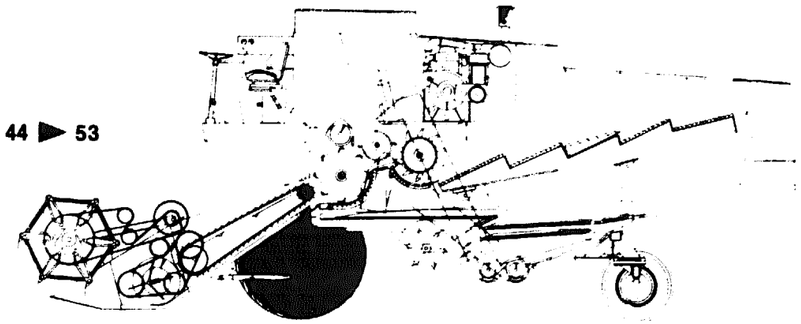

GROUP
GROUPE
GRUPPE
GRUPPO
GROEP

54 ▶ 62

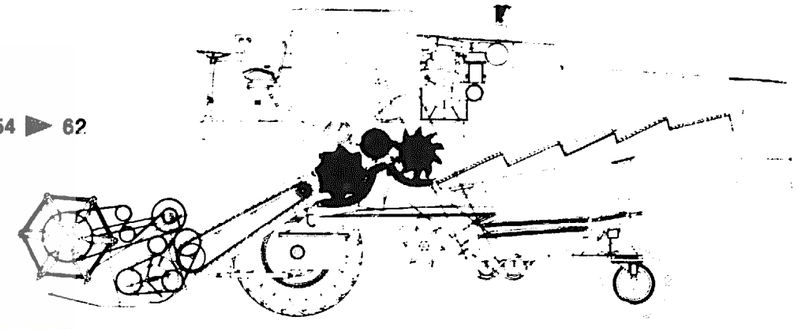

GROUP
GROUPE
GRUPPE
GRUPPO
GROEP

63 ▶ 64

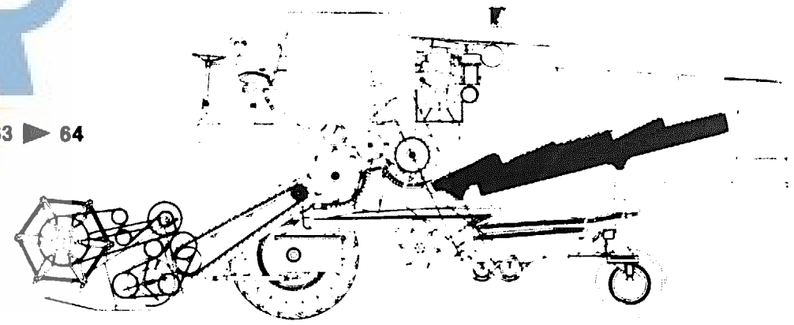

GROUP
GROUPE
GRUPPE
GRUPPO
GROEP

65 ▶ 70

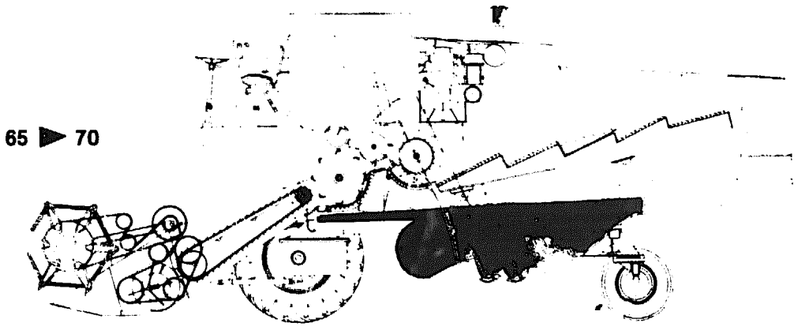

https://michelroger.be 2

GROUP
GROUPE
GRUPPE
GRUPPO
GROEP

71 ▶ 75

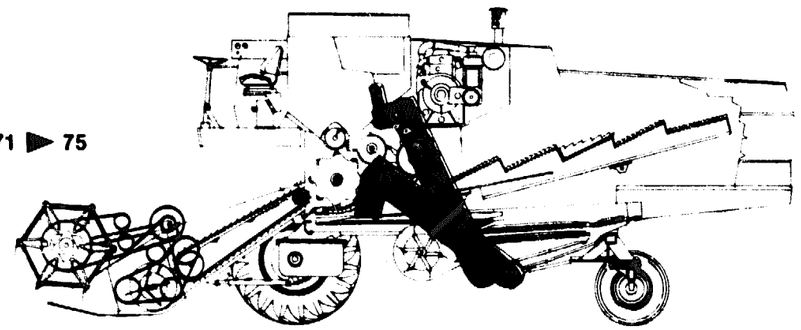

GROUP
GROUPE
GRUPPE
GRUPPO
GROEP

76 ▶ 79

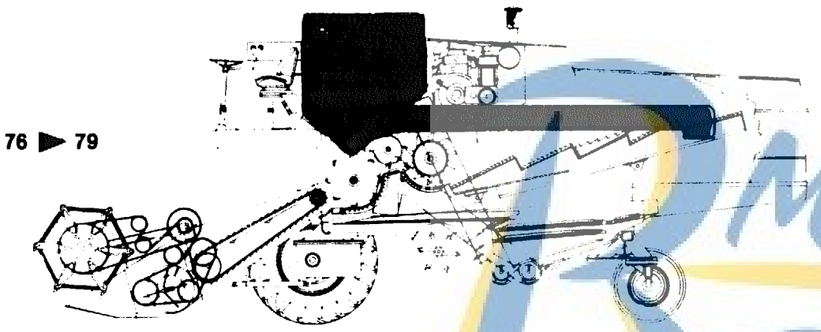

GROUP
GROUPE
GRUPPE
GRUPPO
GROEP

80 ▶ 103

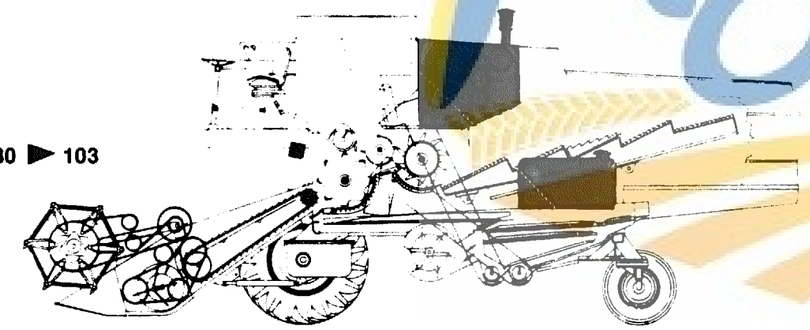

GROUP
GROUPE
GRUPPE
GRUPPO
GROEP

104 ▶ 115

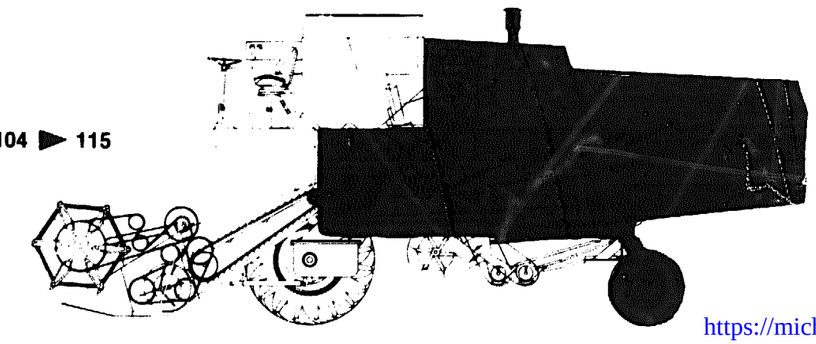

GENERAL INFORMATION

DIRECTIONS FOR USING THIS SERVICE PARTS CATALOGUE

- In order to locate a certain group or part, first refer to the pictorial index at the beginning of the catalogue
- CD : Check Digit (additional figure linked to the part number). The usage of it guarantees that only correct part numbers will be processed so that wrong shipments will be avoided
- Qty : Quantity
- Code : If there are figures in the code column, they refer to machine serial numbers mentioned on page 1. It indicates from which serial number the order reference is valid.
- N.B. : This column lists special information concerning the part.
  Whenever the terms "Left-hand" and "Right-hand" (LH and RH) are used, it should be understood to mean from a position facing in the direction of travel.

ABBREVIATIONS AND SYMBOLS

AR = As Required
NS = Not Serviced
NSS = Not Serviced Separately
* = Refer to a footnote
● = Seal kit
▲ = Seal repair kit
■ = Valve overhaul kit
\-- = See column headed "N.B."
\+ = Pre-bent hydraulic tubes are no longer available as a Service Part.
However, for repair work straight lengths of 0.5 m (1' 7 1/2") and 2 m (6' 7") for each tube size are available under the following part numbers:

w/a = weld assembly
Incl. = Includes
CL = "Clayson" sieve
HC = "Hart-Carter" sieve
LH = Left-hand
RH = Right-hand

Tube size	Order Ref.-CD 0,5 m length	Order Ref.-CD 2 m length
Ø 8 mm	371541 0	371540 8
Ø 10 mm	303052 1	371539 5
Ø 12 mm	303053 3	371538 3
Ø 16 mm	371537 1	371536 9
Ø 18 mm	371535 7	371534 5

Tube size	48" length (1219 mm)
3/8" OD	075931 8
1/2" OD	075932 0
5/8" OD	075933 2
3/4" OD	075934 4

ORDERING SERVICE PARTS FROM YOUR NEW HOLLAND DEALER

To prevent delay, always provide the following information with your order:

1. Model and serial number of the Combine base unit, Header or Engine.
2. Part number, description and quantity of the part(s) required.
3. The method of shipment and your address.

MACHINE DETAILS

For quick reference, when ordering Service Parts, record the details of your machine below.

Model: .....
Serial number: .....
Header width: .....
Serial number: .....
Date of putting into operation: .....

Manufacturer and model of engine: .....
Serial number: .....
Ignition key number: .....
Tyre size: Front: .....
Rear: .....

ALWAYS USE GENUINE NEW HOLLAND PARTS

https://michelroger.be

CONTENTS

	Group 8070	Group 8080
Belts & chains (left-hand and right-hand)	1 & 3	2 & 4
Straw elevator drive	5&7	6&8
Straw elevator	9	9
Operator's platform	10	10
Operator's platform ladder	11	11
Seat	12-12A	12-12A
Steering wheel	13	13
Hydrostatic steering valve	14	14
Handbrake on drive shaft	15	15
Handbrake on differential shaft	16	16
Pedals and circuit for hydraulic brakes	17	17
Circuit for hydraulic brakes	18	18
Clutch pedal and linkage	19	19
Clutch pedal and hydraulic circuit (Mechanical drive)	20	20
Gear shift lever and rods	21	21
Header reversing mechanism lever and linkage	22	22
Header drive engaging mechanism	23	23
Electrical equipment	24-26	24-26
Hydraulic equipment	27-32	27-32
Hydraulic pump	33	33
Hydraulic valve - Three way	34	34
Hydraulic oil reservoir	35	35
Hydraulic horizontal reel adjustment	36	36
Speed range control group	37	37
Hydrostatic drive group	38	38
Hydrostatic motor	39	39
Control valve and charge pump	40	40
Hydrostatic pump	41	41
Hydrostatic filter and reservoir (Hydrostatic drive)	42	42
Hydrostatic lines	43	43
Traction gearbox	44	44
Brakes	45	45
Gear selector group and gearbox studs	46	46
Drive gears	47	47
Final reduction	48	48
Hydraulic equipment (Mechanical drive)	49	49
Mechanical drive	50	50
Front axle	51	51
Traction wheels	52	52
Ground speed vari-drive	53	53
Drum and concave	54	54
Stone trap	55	55
Concave adjustment lever	56	56
Drum vari-drive and suspension linkage	57	57
Rear beater	58	58
Counter shaft and drive group	59	59
Rotary separator	60	60
Main drive idler	61	61
Engaging levers and linkage	62	62
Straw walkers	63	63
Straw walker shafts and bearings	64	64
Grain pan	65	65
Excentric shaft group	66	66
Shaker shoe	67	67
Adjustable sieve and special sieves	68	68
Fan vari-drive and bottom plate	69	69
Fan casing	70	70
Tailings elevator	71	71
Drive group for tailings elevator	72	72
Grain elevator	73	73
Drive group for grain elevator	74	74
Grain tank loading auger	75	75
Grain tank and discharge auger	76	76
Unloading auger pivot	77	77
Unloading auger drive	78	78
Unloading auger and tube	79	79
Accessories for Mercedes OM 401 and OM 421 engines	—	80-81
Air filter for Mercedes OM 401 and OM 421 engines	—	82
Throttle control for Mercedes OM 401 and OM 421 engines	—	83
Accessories for Aifo-Fiat 8361 SI & 8361 SI 10 engines	—	84-85
Throttle control for Aifo-Fiat 8361 SI & 8361 SI 10 engines	—	86
Air filter (Aifo-Fiat 8361 SI & 8361 SI 10 engines)	—	87
Rotary dust screen drive	88	88
Accessories for Mercedes OM 352 A engine	89-90	—
Air filter (Mercedes OM 352 A and Ford 2704 ET engines)	91	—
Air filter (Aifo-Fiat engine 8361 I)	92	—
Throttle control for Mercedes OM 352 A engine	93	—
Accessories for Ford 2704 ET engine	94	—
Assembly parts for Ford 2704 ET engine	95	—
Throttle control for Ford 2704 ET engine	96	—
Accessories for Aifo-Fiat 8361 I engine	97-98	—
Accessories hydrostatic drive (Aifo-Fiat engine)	99	—
Throttle control Aifo-Fiat type 8361 I	100	—
Rotary screen	101	101
High air filter ..... Option	101A	101A
Fuel tank	102	102
Guards for engine (left-hand & right-hand)	103-104	103-104
Frame and attaching parts (front & rear)	105-106	105-106
Steering axle	107-108	107-108
Steering wheels	109	109
Guards (Left-hand and right-hand)	110-111	110-111
Suppplementary equipment for Germany	112	112
Common guards	113	113
Decals	114	114
Tools	115	115
Index	198	198
Recommended initial Service Parts stock	199	199

https://michelroger.be 4

INFORMATION IMPORTANTE

INSTRUCTIONS POUR UTILISER CE CATALOGUE DE PIECES DE RECHANGE

- Pour chercher un groupe ou une pièce spécifique, consulter d'abord l'index illustré au commencement du catalogue.
- CD : Check Digit = Numéro de contrôle. Ce chiffre supplémentaire au numéro de pièce assure le traitement des numéros de pièce corrects et évite ainsi des livraisons erronées.
- Qty : Quantity = Quantité
- Code : Les chiffres figurant dans cette colonne se réfèrent aux numéros de série sur la page 1. Les numéros de pièce indiqués sont disponibles à partir de ce numéro de série.
- N.B. : Cette colonne fournit des informations supplémentaires concernant le numéro de pièce. Les termes "Left-hand et Right-hand" (gauche et droit) s'entendent toujours dans le sens d'avancement normal de la machine.

ABRÉVIATIONS ET SYMBOLES

AR = As Required = Selon besoin
NS = Not Serviced = N'est pas disponible
NSS = Not Serviced Separately = N'est pas disponible séparément
* = Se réfère à une note en bas de la page
● = Seal kit = Kit de joints
▲ = Seal repair kit = Kit de joints et de réparation
■ = Valve overhaul kit = Kit de réparation
– = Voir colonne "N.B."
+ = Les tubes prépliés non sont plus disponibles en pièce de rechange. Pour des travaux de réparation, des longueurs de 0,5 m et de 2 m, pour chaque diamètre, sont disponibles sous les numéros de pièces suivants:

w/a = weld assembly = ensemble soudé
Incl. = Includes = Comprend
CL = Grille "Clayson".
HC = Grille "Hart-Carter".
LH = Left-hand = Côté gauche
RH = Right-hand = Côté droit

Diamètre du tube	Numéro Longueur 0,5 m	Numéro Longueur 2 m
Ø 8 mm	371541 0	371540 8
Ø 10 mm	303052 1	371539 5
Ø 12 mm	303053 3	371538 3
Ø 16 mm	371537 1	371536 9
Ø 18 mm	371535 7	371534 5

Diamètre du tube	Longueur 48" (1219 mm)
3/8" OD	075931 8
1/2" OD	075932 0
5/8" OD	075933 2
3/4" OD	075934 4

COMMANDE DE PIECES DE RECHANGE AUPRES DE VOTRE AGENT NEW HOLLAND

Pour éviter toute perte de temps, mentionnez les points suivants dans vos commandes:

1. Modèle et numéro de série de la machine, du tablier, ou du moteur.
2. Numéro, description et quantité des pièces désirées.
3. Mode d'envoi et votre adresse complète.

COMPLETEZ D'ABORD LES DONNEES DE VOTRE MACHINE

Modèle de la machine: .....
Numéro de série: .....
Largeur du tablier: .....
Numéro de série: .....
Date de la mise en marche: .....

Marque et type de moteur: .....
Numéro de série: .....
Numéro de la clé de contact: .....
Dimension des pneux: Avant: .....
Arrière: .....

UTILISEZ UNIQUEMENT DES PIECES D'ORIGINE NEW HOLLAND

TABLE DES MATIERES

	Groupe 8070	8080
Courroies & chaines (à gauche et à droite)	1 & 3	2 & 4
Commande de l'élévateur de paille	5 & 7	6 & 8
Elévateur de paille	9	9
Plate-forme	10	10
Escalier vers plate-forme de conduite	11	11
Siège	12-12A	12-12A
Volant	13	13
Distributeur de direction	14	14
Frein sur l'arbre de commande	15	15
Frein sur l'arbre differentiel	16	16
Pédales et circuit du frein hydraulique	17	17
Circuit du frein hydraulique	18	18
Pédale de débrayage et tringlerie	19	19
Commande d'embrayage de la transmission méchanique	20	20
Changement de vitesse et tringlerie	21	21
Commande de l'entraînement inverseur de la plate-forme de coupe	22	22
Levier d'accouplement pour tablier	23	23
Equipement électrique	24-26	24-26
Equipement hydraulique	27-32	27-32
Pompe hydraulique	33-33A	33-33A
Valve hydraulique - Triple	34	34
Hydraulic oil	35	35
Déplacement hydraulique horizontale du rabatteur	36	36
Levier de vitesse de la transmission hydrostatique	37	37
Groupe d'entraînement hydrostatique	38	38
Moteur hydrostatique	39	39
Valve distributrice et pompe de gavage	40	40
Pompe hydrostatique	41	41
Filtre et réservoir (Transmission hydrostatique)	42	42
Tuyauterie hydrostatique	43	43
Boîte de vitesse	44	44
Freins	45	45
Commande des pignons de commande et goujon	46	46
Pignons de commande	47	47
Réduction finale	48	48
Equipement hydraulique (Transmission mécanique)	49	49
Transmission mécanique	50	50
Essieu avant	51	51
Roues de traction	52	52
Variateur de vitesse	53	53
Batteur et contre-batteur	54	54
Bac à pierres	55	55
Commande contre-batteur	56	56
Variateur du batteur - Commande et graissage principal	57	57
Tire paille	58	58
Arbre intermédiaire	59	59

https://michelroger.be 5

Séparateur rotatif	60	60
Galet tendeur principal	61	61
Leviers de commande pour galet tendeur principal	62	62
Secoueurs à paille	63	63
Arbre de secoueurs et paliers	64	64
Caisson de préparation	65	65
Excentrique	66	66
Caisson de nettoyage	67	67
Grille réglable et grilles interchangeables	68	68
Variateur du ventilateur et tôle de fond	69	69
Enveloppe du ventilateur	70	70
Elévateur d'otons	71	71
Commande d'élévateur d'otons	72	72
Elévateur de grain	73	73
Commande d'élévateur de grains	74	74
Vis de chargement de la trémie	75	75
Trémie et vis sans fin de décharge	76	76
Pivot de la vis de déchargement	77	77
Commande vis sans fin de décharge	78	78
Vis élévatrice et enveloppe	79	79
Accessoires pour moteur Mercedes OM 401 et OM 421	—	80-81
Filtre à air	—	82
Manette de commande des gaz pour moteurs Mercedes OM 401 et OM 421	—	83
Accessoires pour moteurs Aifo-Fiat 8361 SI & 8361 SI 10	—	84-85
Manette de commande des gaz pour Aifo-Fiat type 8361 SI & 8361 SI 10	—	86
Filtre à air (Aifo-Fiat 8361 SI & 8361 SI 10)	—	87
Commande de la prise d'air rotative	88	88
Accessoires pour moteur Mercedes OM 352 A	89/90	—
Filtre à air (Mercedes OM 352 A et Ford 2704 ET)	91	—
Filtre à air (Aifo-Fiat 8361 I)	92	—
Manette de commande des gaz pour Mercedes OM 352 A	93	—
Accessoires pour moteur Ford 2704 ET	94	—
Pièce d'assemblage pour Ford 2704 ET	95	—
Manette de commande des gaz pour moteur Ford 2704 ET	96	—
Accessoires pour moteur Aifo-Fiat 8361 I	97-98	—
Accessoires d'entraînement hydrostatique (Moteur Aifo-Fiat)	99	—
Manette de commande des gaz Aifo-Fiat type 8361 I	100	—
Tamis tournant	101	101
Filtre à air rallonge	Option 101A	101A
Réservoir de combustible	102	102
Protection pour moteur (à gauche et à droite)	103-104	103-104
Châssis et fixations (avant et arrière)	105-106	105-106
Essieu de direction	107-108	107-108
Roues de direction	109	109
Protections (à gauche et à droite)	110-111	110-111
Equipement supplémentaire pour l'Allemagne	112	112
Protecteurs spéciaux	113	113
Transfers	114	114
Outils	115	115
Index	198	198
Liste de proposition de pièces de rechange pour stock initial	199	199

WICHTIGE INFORMATION

GEBRAUCHSANWEISUNG FÜR DIESE ERSATZTEILLISTE

- Um eine Einzelgruppe oder einen Einzelteil aufzusuchen, zunächst den illustrierten Index vorn im Buch nachschlagen.
- CD : Check Digit = Kontrollnummer. Diese zusätliche Ziffer zur Teilnummer gewährleistet die Behandlung der richtigen Teilnummern und vermeidet somit ungenaue Lieferungen.
- Qty : Quantity = Quantität
- Code : Die Ziffern in dieser Spalte beziehen sich auf die Seriennummern auf Seite 1. Die Teilnummern sind lieferbar ab der angegebenen Seriennummer.
- N.B. : Diese Spalte gibt zusätzliche Auskünfte hinsichtlich der Teilnummer. Angaben wie "Left hand" und "Right-hand' (rechts und links) beziehen sich immer auf die Fahrtrichtung der Maschine.

ABKÜRZUNGEN UND SYMBOLE

AR	= As Required = Nach Bedarf	w/a	= weld assembly = Geschweißte Gruppe
NS	= Not Serviced = Nicht lieferbar	Incl.	= Includes = Enthält
NSS	= Not Serviced Separately = Nicht separat lieferbar	CL	= Sieb "Clayson"
		HC	= Sieb "Hart-Carter"
*	= Bezieht sich auf eine Fußnote	LH	= Left-hand = Links
●	= Seal kit = Dichtungensatz	RH	= Right-hand = Rechts
▲	= Seal repair kit = Dichtungen- und Reparatursatz		
■	= Valve overhaul kit = Reparatursatz		
–	= Siehe Spalte "N.B."		

\+ = Im voraus angefertigte hydraulische Rohre sind nicht länger als Ersatzteil erhältlich. Hydraulische Rohre in Längen von 0,5 m und 2 m, für jeden Durchmesser, bleiben unter den folgenden Teilnummern lieferbar:

Rohrdurchmesser	Teilnummern Länge 0,5 m	Teilnummern Länge 2 m
Ø 8 mm	371541 0	371540 8
Ø 10 mm	303052 1	371539 5
Ø 12 mm	303053 3	371538 3
Ø 16 mm	371537 1	371536 9
Ø 18 mm	371535 7	371534 5

Rohrdurchmesser	Länge 48" (1219 mm)
3/8" OD	075931 8
1/2" OD	075932 0
5/8" OD	075933 2
3/4" OD	075934 4

BESTELLEN DER ERSATZTEILE BEI IHREN NEW HOLLAND-AGENTEN

Um Zeitverlust zu vermeiden: Beachten Sie bitte folgende Hinweisung wenn Sie eine Bestellung machen.

1. Typ und Nummer von Maschine, Schneidwerk oder Motor.
2. Nummer und Stückzahl der gewünschten Ersatzteile.
3. Die Versandart und Ihre richtige Anschrift.

TRAGEN SIE BITTE ERST DIE DATEN IHRER MASCHINE EIN

Typ der Maschine: .....
Seriennummer: .....
Schnittbreite: .....
Seriennummer: .....
Datum der Inbetriebstellung: .....

Motortyp: .....
Seriennummer des Motors: .....
Nummer Zündschlüssel: .....
Reifenmaß: Vorn: .....
Hinten: .....

GEBRAUCHEN SIE NUR ORIGINALERSATZTEILE NEW HOLLAND

https://michelroger.be 6

INHALT

	Gruppe 8070	Gruppe 8080
Keilriemen & Ketten (links und rechts)	1 & 3	2 & 4
Strohforder Antrieb	5 & 7	6 & 8
Strohforder	9	9
Fahrerstand	10	10
Steigleiter zur Fahrerplattform	11	11
Sitz	12-12A	12-12A
Lenkrad	13	13
Hydrostatische Lenkung	14	14
Handbremse auf Antriebswelle	15	15
Handbremse auf Differentialwelle	16	16
Pedale und Kreislauf für hydr. Bremsen	17	17
Kreislauf für hydr. Bremsen	18	18
Kupplungspedal und Gestänge	19	19
Kupplungsbedienung für mechanische Antrieb	20	20
Gangschalthebel und Gestänge	21	21
Bedienung des reversiersystems des Schneidwerkes	22	22
Schalthebel für Plattformwanne	23	23
Elektrische Ausrüstung	24-26	24-26
Hydraulische Ausrüstung	27-32	27-32
Hydraulikpumpe	33-33A	33-33A
Steuerventil - Dreifachwirkend	34	34
Ölbehalter	35	35
Hydraulischer horizontale Haspelverstellung	36	36
Fahrhebel für hydrostatischen Antrieb	37	37
Hydrostatische Antriebsgruppe	38	38
Hydrostatik Motor	39	39
Steuerventil und Füllpumpe	40	40
Hydrostatik Pumpe	41	41
Filter und Behälter (Hydrostatischer Fahrantrieb)	42	42
Leitungen hydrostatik	43	43
Schaltgetriebe	44	44
Bremsen	45	45
Bedienung von Antriebszahnräder und Stehbolzen	46	46
Antriebszahnräder	47	47
Eindreduktion	48	48
Hydraulische Ausrüstung (Mechanischer Fahrantrieb)	49	49
Mechanischer Fahrantrieb	50	50
Vorderachse	51	51
Antriebsräder	52	52
Getriebevariator	53	53
Dreschtrommel und Dreschkorb	54	54
Steinfangmulde	55	55
Dreschkorb Steuerhebel	56	56
Trommelvariator - Bedienung und Hauptschmierung	57	57
Strohabnehmer	58	58
Zwischenwelle und Antrieb	59	59

Rotierende Abscheider	60	60
Spannrolle	61	61
Schalthebel für Hauptspannrolle	62	62
Strohschüttlerwelle	63	63
Strohschüttlerwelle und Lagerung	64	64
Siebkasten	65	65
Exzenter	66	66
Siebkasten	67	67
Regelbares Sieb und auswechselbare Siebe	68	68
Gebläse - Regeltrieb und Bodenblech	69	69
Gebläseverkleidung	70	70
Überkehrelevator	71	71
Getriebe und Überkehrelevator	72	72
Kornelevator	73	73
Getriebe für Kornelevator	74	74
Korntank Ladeschnecke	75	75
Korntank und Entladeschnecke	76	76
Drehpunkt der Entleerungsschnecke	77	77
Umladeschnecke Antrieb	78	78
Umladeschnecke und Rohr	79	79
Zubehör für Mercedes Motoren OM 401 und OM 421	—	80-81
Luftfilter für Mercedes Motoren OM 401 und OM 421	—	82
Gashandhebel für Motoren Mercedes OM 401 und OM 421	—	83
Zubehör für Motoren Aifo-Fiat 8361 SI & 8361 SI 10	—	84-85
Gashandhebel (Aifo-Fiat Typ 8361 SI & 8361 SI 10)	—	86
Luftfilter (Aifo-Fiat Typ 8361 SI & 8361 SI 10)	—	87
Antrieb des rotierenden Kühlersiebes	88	88
Zubehör für Motor Mercedes OM 352 A	89/90	—
Luftfilter (Mercedes OM 352 A und Ford 2704 ET)	91	—
Luftfilter (Aifo-Fiat 8361 I)	92	—
Gashandhebel Mercedes Typ OM 352 A	93	—
Zubehör für Motor Ford 2704 ET	94	—
Anbauteile für Motor Ford 2704 ET	95	—
Gashandhebel Motor Ford 2704 ET	96	—
Zubehör für Motor Aifo-Fiat 8361 I	97-98	—
Zubehör für hydrostatischen Fahrantrieb (Motor Aifo-Fiat)	99	—
Gashandhebel Motor Aifo-Fiat Typ 8361 I	100	—
Drehbarer Staubschirm	101	101
Erhöhter luftfilter ..... Option	101A	101A
Kraftstofftank	102	102
Schutzbleche für Motor (links und rechts)	103-104	103-104
Rahmen und Zubehör (vorn und hinten)	105-106	105-106
Fahrgestell	107-108	107-108
Lenkräder	109	109
Schutzbleche (links und rechts)	110-111	110-111
Zusätzliche Ausrüstung für Deutschland	112	112
Gemeinsame Abschirmungen	113	113
Klebebilder	114	114
Werkzeuge	115	115
Index	198	198
Empfohlener Anfangsvorrat	199	199

Michel ROGER

https://michelroger.be 7

INFORMAZIONE IMPORTANTE

ISTRUZIONI PER L'USO DI QUESTO CATALOGO RICAMBI

- Per cercare un gruppo ed un pezzo specifico, consultare dapprima l'indice illustrato in testa al catalogo.
- CD : Check Digit = Numero di controllo. Questa cifra supplementare al numero di pezzo assicura il trattamento dei corretti numeri di pezzo ed evita spedizioni erronee.
- Qty : Quantity = Quantità
- Code : Le cifre in questa colonna si riferiscono ai numeri di serie sulla pagina 1. I numeri di pezzo indicati sono disponibili a partire di questo numero di serie.
- N.B. : Questa colonna da informazioni supplementari riguardante il numero di pezzo. Le indicazioni "Left-hand" e "Right-hand" (sinistra e destra) si intendono sempre riferite al senso di avanzamento normale della macchina.

ABBREVIAZIONI E SIMBOLI

AR = As Required = Secondo necessità
NS = Not Serviced = Non disponibile
NSS = Not Serviced Separately = Non disponibile separatamente
* = Si riferisce a una nota a basso della pagina
● = Seal kit = Kit di giunti
▲ = Seal repair kit = Kit di giunti e di riparazione
■ = Valve overhaul kit = Kit di riparazione
– = Vedi colonna "N.B."
\+ = Tubi idraulici prepiegati non sono più disponibili come pezzo di ricambio. Per lavori di riparazione, le lunghezze di 0,5 m e di 2 m, per ciascun diametro, sono disponibili sotto i seguenti numeri di ordinazione:

w/a = weld assembly = Gruppo saldato
Incl. = Includes = Comprende
CL = Crivello "Clayson"
HC = Crivello "Hart-Carter"
LH = Left-hand = Lato sinistro
RH = Right-hand = Lato destro

Diametro del tubo	Numero pezzo Lunghezza 0,5 m	Numero pezzo Lunghezza 2 m
Ø 8 mm	371541 0	371540 8
Ø 10 mm	303052 1	371539 5
Ø 12 mm	303053 3	371538 3
Ø 16 mm	371537 1	371536 9
Ø 18 mm	371535 7	371534 5

Diametro del tubo	Lunghezza 48" (1219 mm)
3/8" OD	075931 8
1/2" OD	075932 0
5/8" OD	075933 2
3/4" OD	075934 4

ORDINE DI PEZZI DI RICAMBIO PRESSO IL VOSTRO CONCESSIONARIO NEW HOLLAND

Nel richiedere i pezzi di ricambio citare sempre i dati indicati qui di seguito:

1. Tipo e numero di serie della macchina, della barra di taglio o del motore.
2. Numero e quantità dei pezzi desiderati.
3. Indirizzo e mezzo di spedizione.

TRASCRIVETE QUI LE CARATTERISTICHE DELLA VOSTRA MACCHINA

Tipo della macchina: .....
Numero di serie della macchina: .....
Larghezza della piattaforma di taglio: .....
Numero di serie della piattaforma di taglio: .....
Data di messa in campo: .....

Tipo del motore: .....
Numero di serie del motore: .....
Numero della chiave d'accensione: .....
Dimensione pneumatici: Anteriore: .....
Posteriore: .....

USATE SOLTANTO PEZZI DI RICAMBIO ORIGINALI NEW HOLLAND

INDICE

	Gruppo 8070	8080
Cinghie e catene (lato sinistro e destro)	1 & 3	2 & 4
Comando canale elevatore paglia	5 & 7	6 & 8
Canale elevatore paglia	9	9
Piattaforma di guida	10	10
Scaletta d'accesso alla piattaforma di guida	11	11
Sedile del conducente	12-12A	12-12A
Volante	13	13
Valvola distributrice	14	14
Freno a mano sull'albero di comando	15	15
Freno a mano sull'albero del differenziale	16	16
Pedali e circuito idraulico	17	17
Circuito indraulico	18	18
Pedale e tiranteria	19	19
Pedale frizione e circuito idraulico	20	20
Leva di comando cambio della marce e biellismo di comando	21	21
Comando del sistema invertitore della piattaforma di taglio	22	22
Interruttore della piattaforma di taglio	23	23
Impianto elettrico	24-26	24-26
Impianto idraulico	27-32	27-32
Pompa idraulica	33-33A	33-33A
Distributore idraulico triplo	34	34
Serbatoio d'olio	35	35
Regolazione orizzontale idraulica dell'aspo	36	36
Distributore per il comando della sterzatura idrostatica	37	37
Gruppo di comando della sterzatura idrostatica	38	38
Motore idrostatico	39	39
Valvola di comando	40	40
Pompa idrostatica	41	41
Filtro e serbatoio d'olio (idrostatico)	42	42
Condutture idrostatiche	43	43
Cambio di velocita	44	44
Freni	45	45
Comando dei pignoni di comando e bulloni	46	46
Comando dei pignoni di comando	47	47
Riduzione finale	48	48
Impianto idraulico (Cambio meccanico)	49	49
Trazione meccanica	50	50
Assale anteriore	51	51
Ruote motrici	52	52
Variatore velocita avanzamento	53	53
Battitore e controbattitore	54	54
Parasassi	55	55
Comando del controbattitore	56	56
Variatore del battitore e comando - Lubrificazione centrale	57	57
Mulinello	58	58
Albero intermedio e comando	59	59

https://michelroger.be 8

Separatore rotativo	60	60
Tendicinghia principale	61	61
Levi di avviamento della tendicinghia principale	62	62
Scuotipaglia	63	63
Albero degli scuotipaglia - Cuscinetti	64	64
Tavolo di ricupero	65	65
Albero eccentrico	66	66
Cassone di pulizia	67	67
Crivello registrabile e criveili intercambiabili	68	68
Variatore di velocita del ventilatore e lamiera di fondo	69	69
Cassone del ventilatore	70	70
Elevatore del ricupero	71	71
Comando dell'elevatore del ricupero	72	72
Elevatore della granella	73	73
Comando dell'elevatore della granella	74	74
Coclea di carico del serbatoio del grano	75	75
Serbatoio del grano e coclea di fondo	76	76
Artoculazione della coclea di scarico	77	77
Comando della coclea di scarico	78	78
Coclea di scarico e tubo di scarico	79	79
Accessori per motore Mercedes, tipo OM 401 tipo OM 421	—	80-81
Filtro dell'aria motore Mercedes, tipo OM 401 tipo OM 421	—	82
Manopola comando acceleratore, motore Mercedes, tipo OM 401, tipo OM 421	—	83
Accessori per motore Aifo-Fiat 8361 SI & 8361 SI 10	—	84-85
Manopola comando acceleratore, motore Aifo-Fiat tipo 8361 SI & 8361 SI 10	—	86
Filtro dell'aria (motore Aifo-Fiat 8361 SI & 8361 SI 10)	—	87
Comando della coperchio antipolvere rotante	88	88
Accessori per motore Mercedes, tipo OM 352 A	89-90	—
Filtro dell'aria (Mercedes OM 352 A e Ford tipo 2704 ET)	91	—
Filtro dell'aria (motore Aifo-Fiat tipo 8361 I)	92	—
Manopola comando acceleratore, motore Mercedes, tipo OM 352 A	93	—
Accessori per motore Ford, tipo 2704 ET	94	—
Pezzi di montaggio per motore Ford 2704 ET	95	—
Manopola comando acceleratore, motore Ford, tipo 2704 ET	96	—
Accessori per motore Aifo-Fiat 8361 I	97-98	—
Accessori per gruppo idrostatico - Moteur Aifo-Fiat	99	—
Manopola e comando acceleratore, motore Aifo-Fiat tipo 8361 I	100	—
Coperchio antipolvere rotante	101	101
Filtro dell'aria ..... Option	101A	101A
Serbatoio del carburante	102	102
Protezione (sinistra e destra)	103-104	103-104
Telaio e parti del telaio (davanti e dietro)	105-106	105-106
Asse posteriore	107-108	107-108
Ruote direzionali	109	109
Protezioni (sinistra e destra)	110-111	110-111
Equipaggiamento supplementare per Germania	112	112
Protezioni speciale	113	113
Decalcomanie	114	114
Utensili	115	115
Indici	198	198
Scorta iniziale suggerita	199	199

BELANGRIJKE INFORMATIE

GEBRUIKSAANWIJZING VOOR DEZE ONDERDELENBOEK

- Om een bepaalde groep of onderdeel op te zoeken, raadpleeg eerst de geïllustreerde index vooraan in het boek.
- CD : Check Digit = Controlenummer. Dit bijkomend cijfer bij het stuknummer verzekert dat alleen juiste stuknummers behandeld worden en vermijdt aldus verkeerde leveringen.
- Qty : Quantity = Hoeveelheid
- Code : De getallen in deze kolom verwijzen naar de serienummers op blz. 1. De code duidt aan vanaf welk serienummer het bestelnummer geldig is
- N.B. : In deze kolom staat bijkomende informatie betreffende het stuknummer. Indien de termen "Left-hand" en "Right-hand" (links en rechts) worden gebruikt, is dit steeds volgens de rijrichting van de machine.

AFKORTINGEN EN SYMBOLEN

AR	= As required = Naar believen	w/a	= weld assembly = Lasgroep
NS	= Not serviced = Kan niet besteld worden	Incl.	= Includes = Bevat
NSS	= Not Serviced Separately = Wordt niet afzonderlijk geleverd.	CL	= Zeef "Clayson"
*	= Zie voetnota	HC	= Zeef "Hart-Carter"
●	= Seal kit = Afdichtingskit	LH	= Left-hand = Linkse kant
▲	= Seal repair kit = Afdichtings- en herstelkit	RH	= Right-hand = Rechtse kant
■	= Vaive overhaul kit = Algemene herstelkit		
–	= Zie kolom "N.B."		
+	= Voorgeplooide hydraulische leidingen zijn niet langer beschikbaar als wisselstuk. Wel blijven hydraulische leidingen met lengte van 0,5 m en 2 m beschikbaar onder volgende bestelnummers:		

Diameter	Bestelnummer lengte 0,5 m	Bestelnummer lengte 2 m
Ø 8 mm	371541 0	371540 8
Ø 10 mm	303052 1	371539 5
Ø 12 mm	303053 3	371538 3
Ø 16 mm	371537 1	371536 9
Ø 18 mm	371535 7	371534 5

Diameter	48" lengte (1219 mm)
3/8" OD	075931 8
1/2" OD	075932 0
5/8" OD	075933 2
3/4" OD	075934 4

HET BESTELLEN VAN WISSELSTUKKEN BIJ UW NEW HOLLAND AGENT

Doe Uw bestellingen met opgave van volgende gegevens om tijdverlies te vermijden:

1. Model en serienummer van uw machine, uw maaibord of uw motor.
2. Stuknummer, benaming en aantal van de gewenste wisselstukken.
3. Verzendingswijze en Uw juiste adres.

MACHINEGEGEVENS

Vul nu de gegevens in van uw machine om vlug de goede referenties te kunnen opgeven bij het bestellen van wisselstukken:

Model: .....
Serienummer: .....
Maaibordbreedte: .....
Serienummer: .....
Datum in bedrijfstelling: .....

Merk en type motor: .....
Serienummer: .....
Nummer kontaktsleutel: .....
Bandenmaat: Vóór: .....
Achter: .....

GEBRUIK ALTIJD ORIGINELE WISSELSTUKKEN NEW HOLLAND

https://michelroger.be 9

INHOUD

	Groep 8070	Groep 8080
Riemen en kettingen (links en rechts)	1 & 3	2 & 4
Aandrijving stroëlevator	5 & 7	6 & 8
Stroëlevator	9	9
Stuurplatform	10	10
Trap voor stuurplatform	11	11
Stuurzetel	12-12A	12-12A
Stuurwiel	13	13
Verdeelklep	14	14
Handrem op aandrijfas	15	15
Handrem op differentieelas	16	16
Pedalen en circuit voor hydraulische rem	17	17
Circuit voor hydraulische rem	18	18
Ontkoppeling en stangenstelsel	19	19
Koppelingsbediening voor mechanische aandrijving	20	20
Gangwisselhefboom en stangenstelsel	21	21
Bediening omkeermechanisme voor maaibord	22	22
Maaibordschakelaar	23	23
Elektrische uitrusting	24-26	24-26
Hydraulische uitrusting	27-32	27-32
Hydraulische pomp	33-33A	33-33A
Driedelig hydraulische besturingsventil	34	34
Reservoir	35	35
Hydraulische horizontale haspelverstelling	36	36
Bedieningsgroep voor hydrostatische aandrijving	37	37
Hydrostatische aandrijfgroep	38	38
Hydrostatiek motor	39	39
Bedieningsklep en vulpomp	40	40
Hydrostatische pomp	41	41
Filter en oliebehouder (Hydrostatische aandrijving)	42	42
Leidingen hydrostatiek	43	43
Versnellingskast	44	44
Remmen	45	45
Bediening aandrijftandwielen & draadeinden	46	46
Aandrijftandwielen	47	47
Eindreduktie	48	48
Hydraulische uitrusting (Mechanische aandrijving)	49	49
Mechanische aandrijving	50	50
Draagbalk	51	51
Aandrijfwielen	52	52
Rijvariator	53	53
Dorstrommel en dorsmantel	54	54
Steenvanggoot	55	55
Dorskorfbediening	56	56
Trommelvariator - Bediening en centrale smering	57	57
Afneemtrommel	58	58
Tussenas en aandrijving	59	59

Roterende afscheider	60	60
Hoofdspanrol	61	61
Schakelhefbomen voor hoofdspanrol	62	62
Stroschudders	63	63
Stroschudderassen en lageringen	64	64
Voorbereidingsbodem	65	65
Excentriek	66	66
Zeefkast	67	67
Regelbare zeef en wisselzeven	68	68
Windmolenvariator en bodemplaat	69	69
Windmolenkast	70	70
Terugvoerelevator	71	71
Aandrijving terugvoerelevator	72	72
Graanelevator	73	73
Aandrijving graanelevator	74	74
Laadvijzel graantank	75	75
Graantank en bodemvijzel	76	76
Scharnierpunt losvijzel	77	77
Aandrijving losvijzel	78	78
Losvijzel en losbuis	79	79
Toebehoren voor motoren Mercedes OM 401 en OM 421	—	80-81
Luchtfilter voor motoren Mercedes OM 401 en OM 421	—	82
Gashandgreep motoren Mercedes OM 401 en OM 421	—	83
Toebehoren voor motoren Aifo-Fiat 8361 SI & 8361 SI 10	—	84-85
Gashandgreep (Aifo-Fiat type 8361 SI & 8361 SI 10)	—	86
Luchtfilter (Aifo-Fiat type 8361 SI & 8361 SI 10)	—	87
Aandrijving roterende stofkap	88	88
Toebehoren voor motor Mercedes OM 352 A	89-90	—
Luchtfilter (Mercedes OM 352 A en Ford 2704 ET)	91	—
Luchtfilter (Aifo-Fiat 8361 I)	92	—
Gashandgreep Mercedes type OM 352 A	93	—
Toebehoren voor motor Ford 2704 ET	94	—
Aanbouwdelen motor Ford 2704 ET	95	—
Gashandgreep motor Ford 2704 ET	96	—
Toebehoren voor motor Aifo-Fiat 8361 I	97-98	—
Aanbouwdelen hydrostatische aandrijving (Aifo-Fiat motor)	99	—
Gashandgreep Aifo-Fiat type 8361 I	100	—
Draaiende stofkap	101	101
Verhoogde luchtfilter ..... Option	101A	101A
Brandstoftank	102	102
Afscherming motor (links en rechts)	103-104	103-104
Raam en raamdelen (vooraan en achteraan)	105-106	105-106
Stuurbrug	107-108	107-108
Stuurwielen	109	109
Afschermingen (links en rechts)	110-111	110-111
Bijkomende uitrusting voor Duitsland	112	112
Gemeenschappelijk veiligheidsafscherming	113	113
Plakplaatjes	114	114
Gereedschap	115	115
Index	198	198
Voorstellijst minimum stock wisselstukken	199	199

https://michelroger.be 10

CODE TABLE
TABLEAU DE CODES
KODENTABELLE
TABELLA DI CODICI
CODE TABEL

CODES 8070

33	: 4215001	57	: 4239001	32	: 4114001	47	: 4129001
35	: 4217001	58	: 4240001	35	: 4117001	48	: 4130001
36	: 4218001	59	: 4241001	36	: 4118001	49	: 4131001
38	: 4220001	60	: 4242001	39	: 4121001	50	: 4132001
39	: 4221001	61	: 4243001	40	: 4122001	51	: 4133001
40	: 4222001	62	: 4244001	41	: 4123001	52	: 4134001
41	: 4223001	63	: 4245001	43	: 4125001	53	: 4135001
42	: 4224001	64	: 4246001	44	: 4126001	54	: 4136001
43	: 4225001	65	: 4247001	45	: 4127001	55	: 4137001
44	: 4226001	66	: 4248001	46	: 4128001	56	: 4138001
45	: 4227001	67	: 4249001			57	: 4144001
46	: 4228001	68	: 4250001			58	: 4141001
47	: 4229001	69	: 4251001			59	: 4142001
48	: 4230001	70	: 4252001				
51	: 4233001	71	: 4253001				
52	: 4234001	72	: 4254001				
53	: 4235001	73	: 4258001				
54	: 4236001	74	: 4260001				
55	: 4237001	75	: 4263001				
56	: 4238001	76	: 4266001				

336	: 4214001	4214999	322	: 4113001	4113999
338	: 4214001	4216999	325	: 4113001	4116999
341	: 4214001	4219999	326	: 4113001	4117999
342	: 4214001	4220999	329	: 4113001	4120999
343	: 4214001	4221999	★	: 4113001	4121999
344	: 4214001	4222999	330	: 4113001	4121999
345	: 4214001	4223999	333	: 4113001	4125999
346	: 4214001	4224999	334	: 4113001	4125999
347	: 4214001	4225999	343	: 4114001	4121999
★	: 4214001	4226999	364	: 4117001	4124999
438	: 4214001	4226999	379	: 4117001	4124999
448	: 4224001	4225999	385	: 4118001	4121999
464	: 4214001	4227999	441	: 4117001	4126999
492	: 4214001	4228999	447	: 4122001	4125999
504	: 4226001	4228999	450	: 4126001	4126999
610	: 4214001	4232999	491	: 4113001	4128999
616	: 4221001	4332999	500	: 4122001	4127999
643	: 4214001	4233999	519	: 4113001	4129999
676	: 4214001	4234999	609	: 4113001	4132999
691	: 4229001	4234999	610	: 4121001	4136999
717	: 4229001	4235999	611	: 4113001	4136999
745	: 4214001	4236999	612	: 4113001	4137999
758	: 4227001	4236999	613	: 4113001	4130999
802	: 4235001	4237999	614	: 4122001	4136999

https://michelroger.be 11

CODE TABLE
TABLEAU DE CODES
KODENTABELLE
TABELLA DI CODICI
CODE TABEL

CODES 8070

844	: 4214001	4239999
845	: 4214001	4240999
846	: 4237001	4240999
847	: 4214001	4242999
848	: 4214001	4245999
849	: 4223001	4242999
850	: 4229001	4252999
851	: 4214001	4253999
852	: 4214001	4246999
853	: 4214001	4241999
854	: 4214001	4247999
855	: 4214001	4252999
856	: 4226001	4252999
857	: 4237001	4257999
858	: 4214001	4257999
859	: 4229001	4257999
860	: 4253001	4257999
861	: 4241001	4257999
862	: 4214001	4248999
863	: 4229001	4247999
864	: 4214001	4259999
865	: 4214001	4262999
866	: 4220001	4265999
867	: 4214001	4265999
868	: 4263001	4265999

CODES 8080

615	: 4126001	4136999
616	: 4133001	4136999
617	: 4126001	4137999
618	: 4125001	4137999
619	: 4113001	4140999
620	: 4130001	4140999
621	: 4113001	4133999
622	: 4129001	4133999
623	: 4122001	4133999
624	: 4122001	4141999
625	: 4117001	4143999

Michel ROGER GROUP

1 ➧ 8

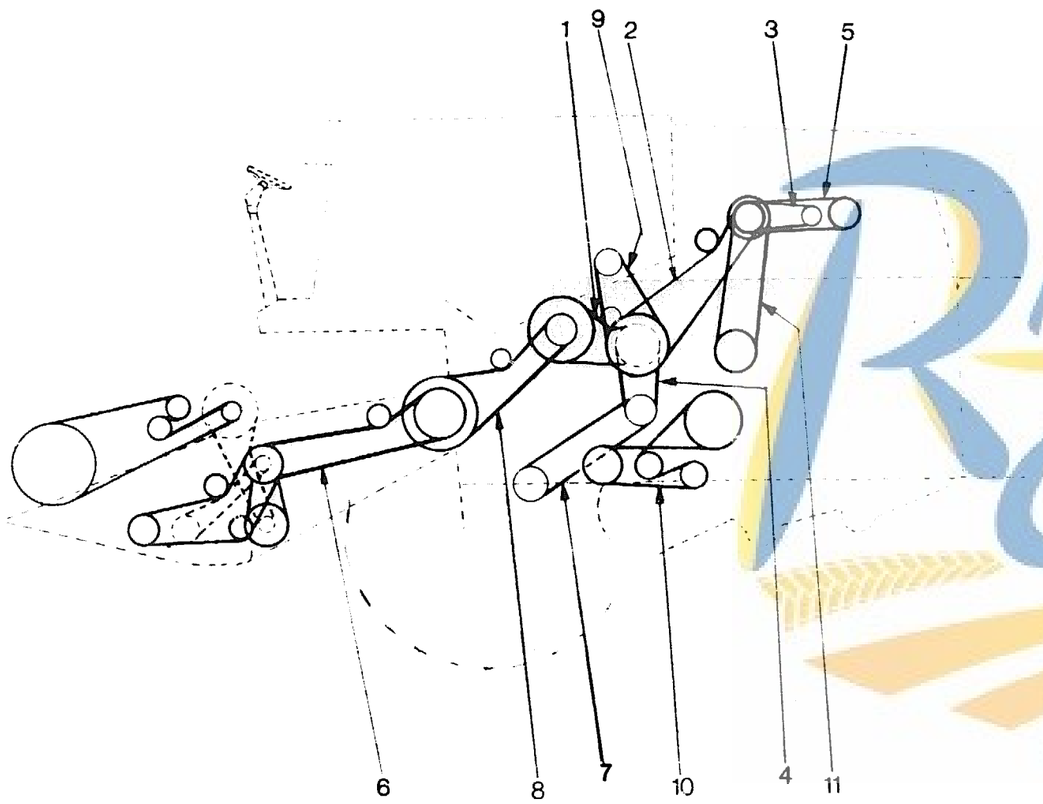

BELTS & CHAINS (LEFT-HAND)
COURROIES & CHAINES (GAUCHE)
KEILRIEMEN & KETTEN (LINKS)
CINGHIE E CATENE (LATO SINISTRO)
RIEMEN & KETTINGEN (LINKS)

MODEL 8070

Fig.	Order Ref.	CD	8070	8080	Code	Description		N.B.
1	387454	3	1		610	Powerband belt, Rethresher drive	6.5	
	451481	9	1		51	Powerband belt, Rethresher drive		
2	391650	5	1			Powerband belt, Drum variator	2.1	
3	230151	3	1			"V" belt, Hydr. pump drive	2.6	
4	321559	7	1			"V" belt,Ground speed	1.5	For normal speed:Ø 404 mm pulley
	417643	1	1			"V" belt,Ground speed		For low speed: Ø 350 mm pulley
5	389245	2	1			"V" belt, Intermediate drive shaft	0.7	
6	394426	3	1			"V" belt, Header drive	1.1	
7	356025	7	1			"V" belt,Ground speed vari-drive	1.5	
8	393326	0	1			"V" belt, Straw elevator drive	1.5	
9	410896	9	1			"V" belt, Intermediate shaft (grain auger)	3.9	
10	605529	7	1			"V" belt, Straw walker drive	0.9	
11	411543	3	1			Powerband belt, Hydrostatic drive	2.1	

ROGER Mjchel

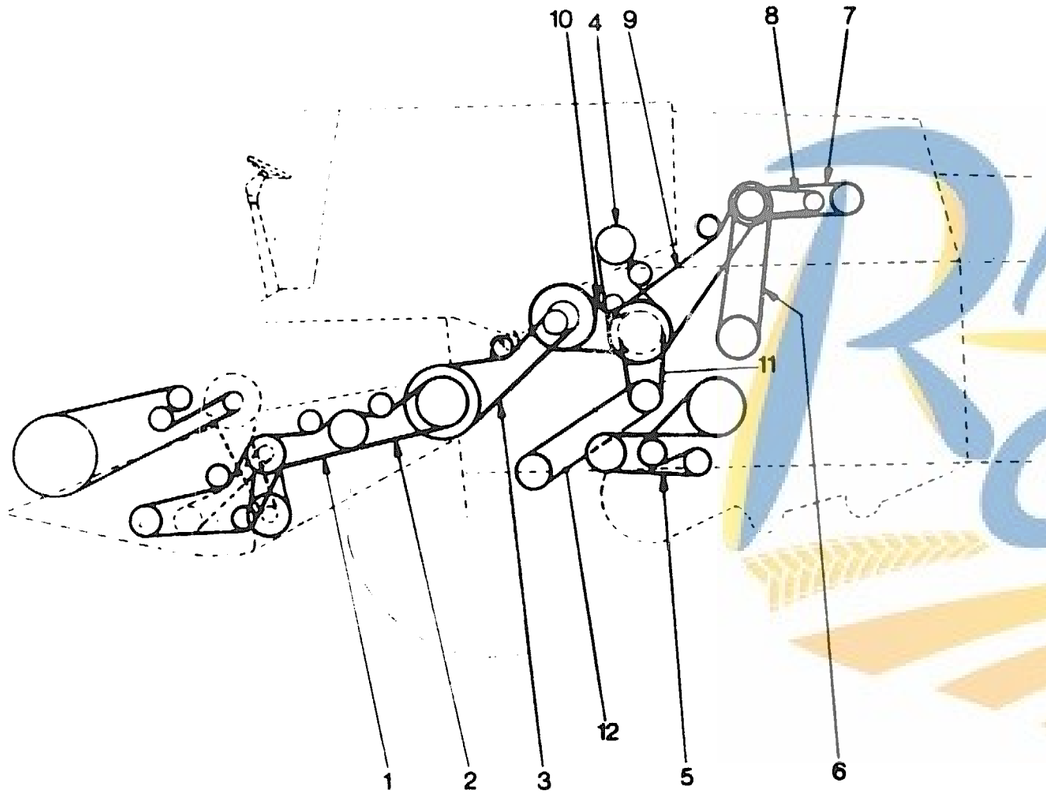

BELTS & CHAINS (LEFT-HAND)
COURROIES & CHAINES (GAUCHE)
KEILRIEMEN & KETTEN (LINKS)
CINGHIE E CATENE (LATO SINISTRO)
RIEMEN & KETTINGEN (LINKS)

MODEL 8080

Fig.	Order Ref.	CD	8070	8080	Code	Description	N.B.	
1	387931 5			1		"V" belt,(Set of 2) Header drive	1.3	
2	391143 0			1		"V" belt, (Set of 2) Header drive	1.1	
3	393326 0			1		"V" belt,	0.7	
4	410896 9			1		"V" belt, Intermediate shaft (Grain auger)	1.2	
5	605529 7			1		"V" belt, Straw walker drive	0.9	
6	411543 3			1		Powerband belt, Hydrostatic drive	2.1	
7	389245 2			1		"V" belt, Intermediate drive shaft	0.7	
8	230151 3			1		"V" belt, Hydr. pump drive	2.6	
9	391650 5			1		Powerband belt, Drum variator	0.9	
10	387454 3			1	330	Powerband belt, Rethresher drive	5.4	
	451481 9			1	40	Powerband belt, Rethresher drive		
11	444935 3			1		"V" belt, Ground speed	1.5	For normal speed: Ø 404 mm pulley
	444934 1			1		"V" belt, Ground speed	1.5	For low speed: Ø 350 mm pulley
12	444936 5			1		"V" belt, Ground speed	1.5	

Michel ROGER

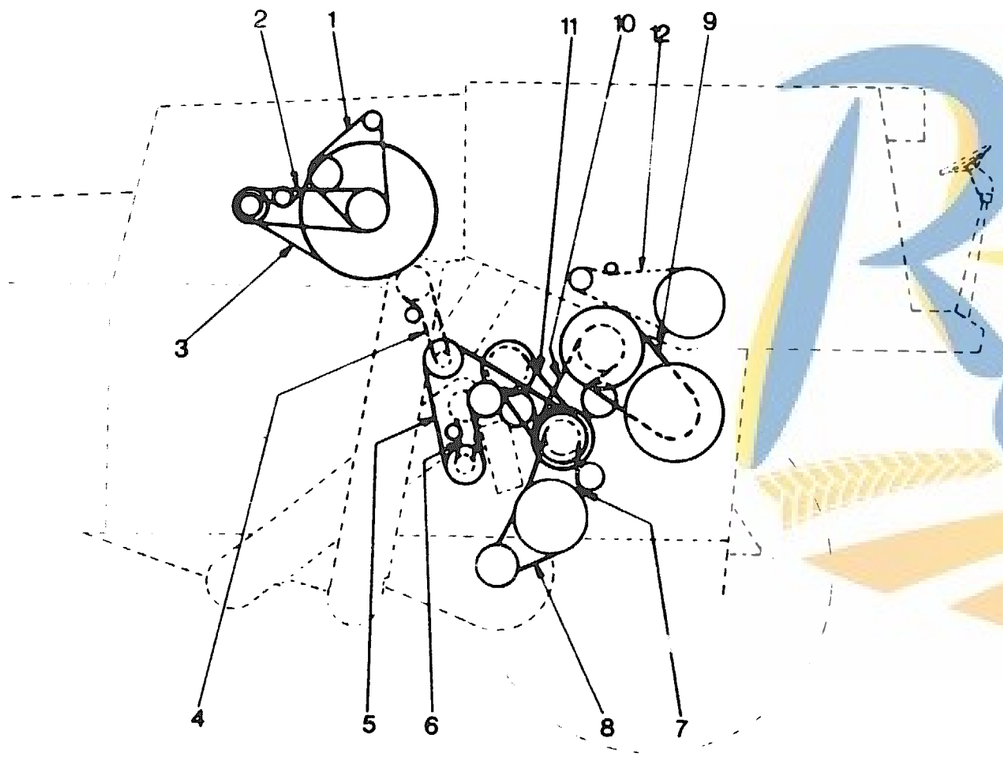

BELTS & CHAINS (RIGHT-HAND)
COURROIES & CHAINES (DROITE)
KEILRIEMEN & KETTEN (RECHTS)
CINGHIE E CATENE (LATO DESTRO)
RIEMEN & KETTINGEN (RECHTS)

MODEL 8070

Fig.	Order Ref.	CD	8070	8080	Code	Description		N.B.
1	421173 0		1			"V" belt, Alternator drive		Mercedes OM 352 A engine
	371222 4		1			"V" belt, Alternator drive	0.5	Ford 2704 ET engine
2	384397 8		1			"V" belt, Fan drive	2.2	
3	381489 0		1			"V" belt, Dust screen drive	1.5	
4	350418 4		1			Chain, Grain elevator drive	0.5	
5	387469 4		1			"V" belt, Tailings elevator drive	0.7	
6	395313 5		1			Chain, Tailings elevator drive	0.5	
7	378989 5		1			"V" belt, Fan vari-drive	1.7	
8	388280 5		1			"V" belt, Fan vari-drive	1.0	
9	387460 6		1			"V" belt, Drum vari-drive	2.0	
10	396750 2		1		344	"V" belt, (set of 2) Counter shaft drive	4.0	
	437033 2		1		41	"V" belt, (set of 2) Counter shaft drive		
11	395955 5		1			"V" belt, Variator drive	0.8	
12	410962 0		1			Chain, Grain tank auger drive	0.5	

https://michelroger.be 15

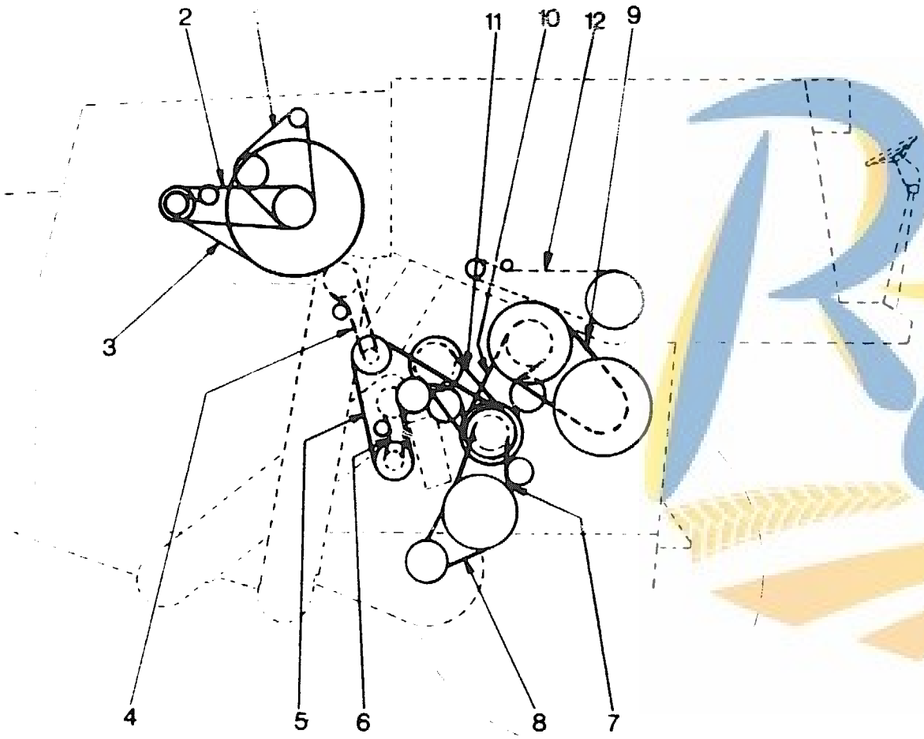

BELTS & CHAINS (RIGHT-HAND)
COURROIES & CHAINES (DROITE)
KEILRIEMEN UND KETTEN (RECHTS)
CINGHIE E CATENE (LATO DESTRO)
RIEMEN & KETTINGEN (RECHTS)

MODEL 8080

Fig.	Order Ref.	CD	8070	8080	Code	Description		N.B.
1	393519 9			1		"V" belt, Alternator drive	0.5	Mercedes OM 401 engine
	432642 8			1		"V" belt, Alternator drive		Mercedes OM 421 engine
2	384397 8			1		"V" belt, Fan drive	2.2	Mercedes OM 401 engine
3	381489 0			1		"V" belt, Dust screen drive	1.5	
4	350418 4			1		Chain, Grain elevator drive	0.5	
5	387469 4			1		"V" belt, Tailings elevator drive	0.7	
6	395313 5			1		Chain, Tailings elevator drive	0.5	
7	378989 5			1		"V" belt, Fan vari-drive	1.7	
8	388280 5			1		"V" belt, Fan vari-drive	1.0	
9	387460 6			1		"V" belt, Drum vari-drive	2.0	
10	396750 2			1	326	"V" belt,(Set of 2) Counter shaft drive		
	437033 2			1	36	"V" belt, (Set of 2) Counter shaft drive		
11	395955 5			1		"V" belt, Variator drive	0.8	
12	410962 0			1		Chain, Grain tank auger drive	0.5	

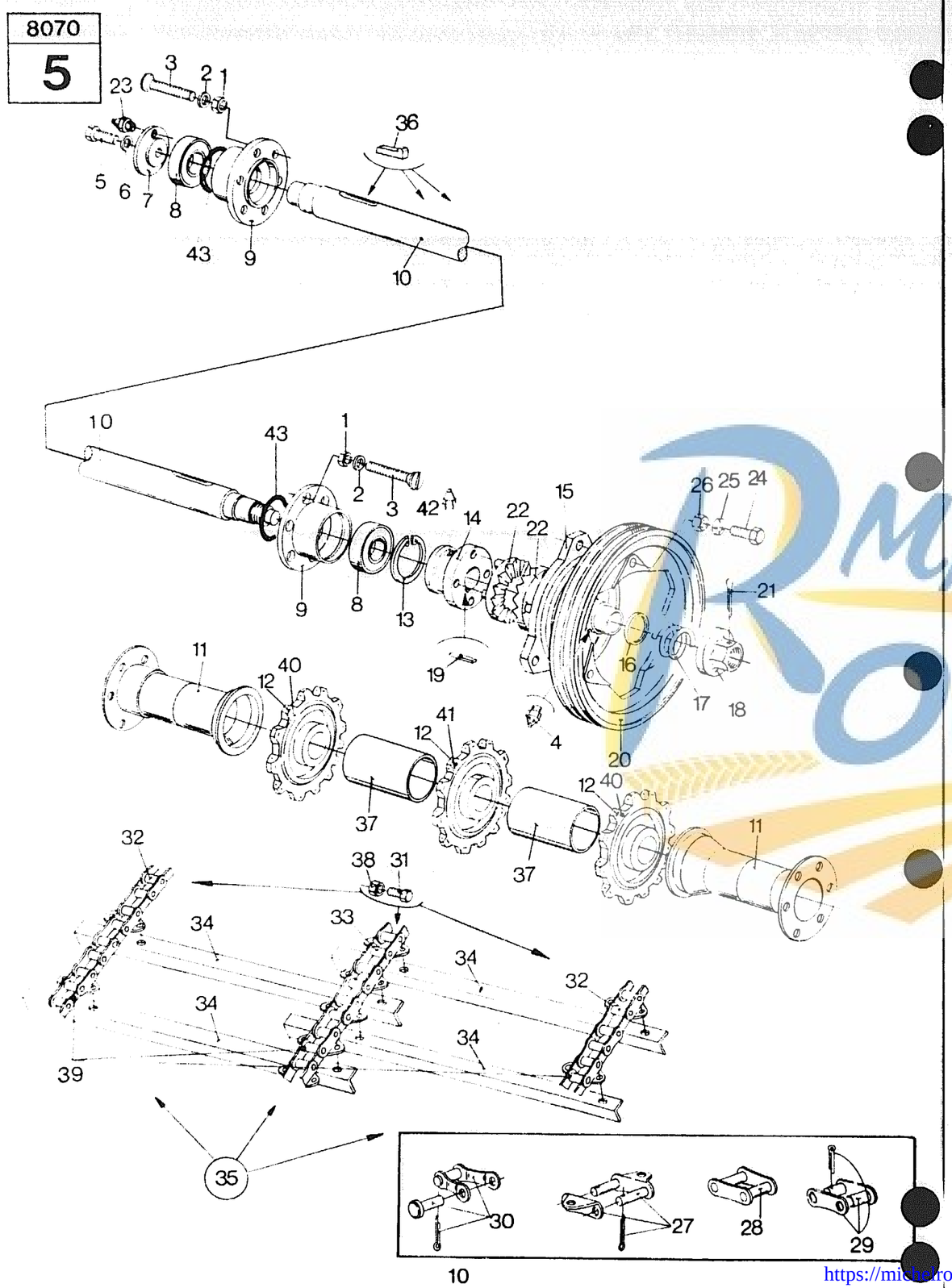

STRAW ELEVATOR DRIVE
COMMANDE DE L'ELEVATEUR DE PAILLE
STROHFORDER ANTRIEB
COMANDO CANALE ELEVATORE PAGLIA
AANDRIJVING STROËLEVATOR

MODEL 8070

Fig.	Order Ref.	CD	8070	8080	Code	Description	N.B	
1	100016 0		25			Hex. nut		
2	140045 9		25			Tooth lockwasher		
3	320772 8		12			Machine screw		
4	321204 6		2			Grease fitting		
5	120120 5		1			Special bolt		
6	140046 1		2			Tooth lockwasher		
7	482744 4		1			Cover	0.3	
8	210034 1		2			Ball bearing	]	
9	394154 6		2			Bearing housing	] 4.6	
10	433085 7		1		346	Shaft	5.3	
	448042 4		1		504	Shaft	5.3	
	455106 9		1		850	Shaft	5.3	
	916863 1		1		71	Shaft	5.3	
11	394648 3		2			Protection tube		
12	392932 4		3		346	Sprocket		
13	370018 0		1			Circlip	1.6	
14	393902 2		1		610	Flange	1.5	
	451651 0		1		51	Flange	1.5	
15	393903 4		1			Hub	1.7	
16	140125 9		1		746	Washer	0.8	
	9512983 5		1		76	Washer		
17	420927 8		1			Spring		
18	309135 3		1			Special nut		
19	170012 6		1			Flat key	1.5	
20	391118 7		1			"V" pulley	1.7	
21	130016 6		1			Cotter pin		
22	362801 1		2			Clutch half	1.5	
23	332038 6		1			Grease fitting	0.3	
24	120083 5		3			Hex. cap screw		
25	140046 1		3			Tooth lockwasher		
26	337475 7		9			Hex. nut		
27	397380 8		AR			Attachment link	]	
28	043278 4		AR			Roller link	]	
29	040241 4		AR			Coupler link	] 1.6	
30	040242 6		AR			Offset link	]	
31	120103 9		176			Hex. cap screw		
32	-NSS-		2			Chain, RH & LH		Incl. figs. 27,28,29,30,31 and 38
33	-NSS-		1			Chain, middle	3.0	Incl. figs. 27,28,29,30,31 and 38
34	394650 8		44		338	Lath	0.7	
	439178 0		44		35	Lath	0.7	
35	394675 0		1		858	Elevator chain assy	1.9	Incl. figs. 32,33 and 34
	918280 7		1		73	Elevator chain assy	1.9	Incl. figs. 32,33 and 34
36	412241 4		3			Key, Gib head	1.4	

https://michelroger.be

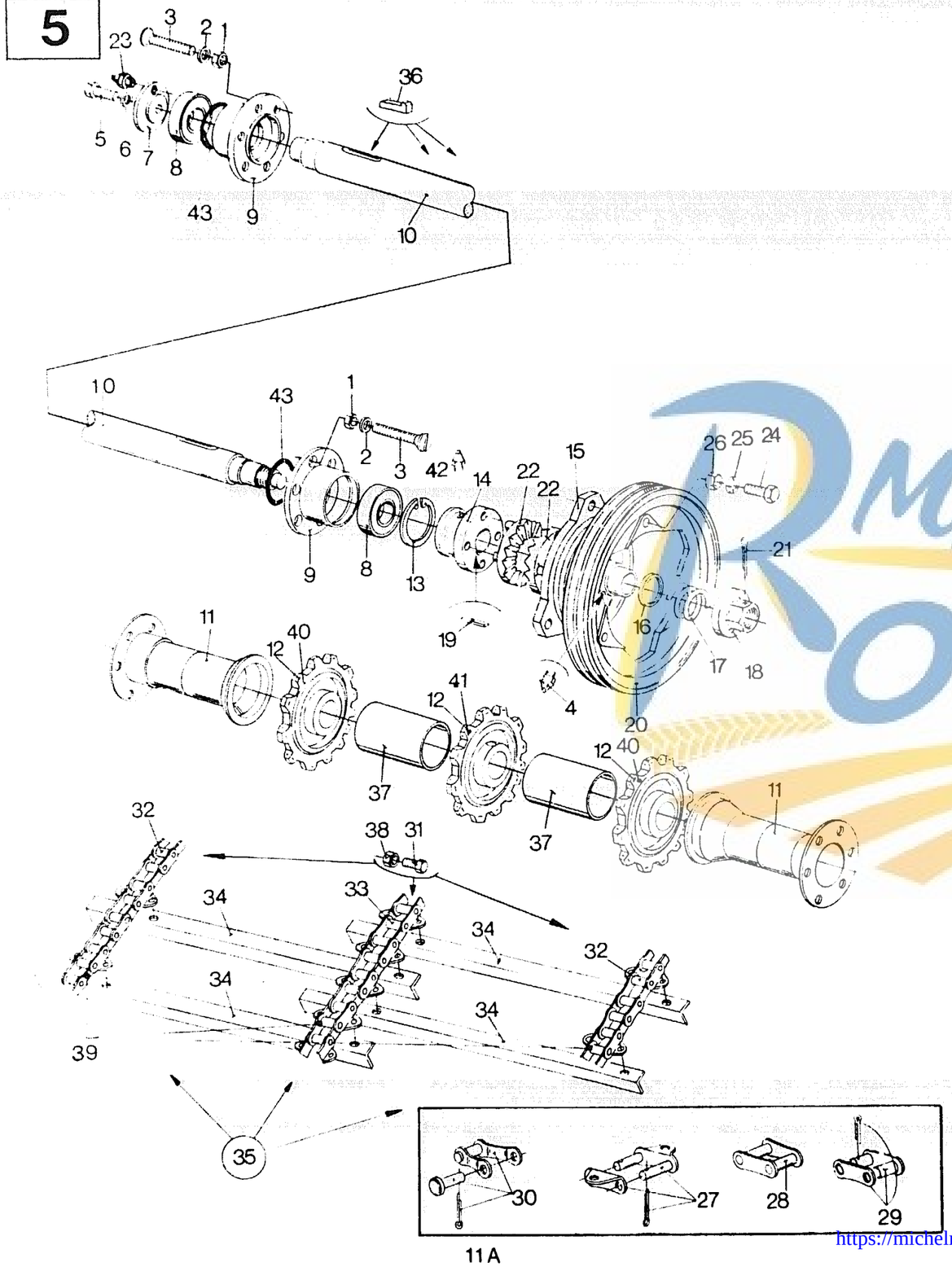

STRAW ELEVATOR DRIVE
COMMANDE DE L'ELEVATEUR DE PAILLE
STROFORDER ANTRIEB
COMANDO CANALE ELEVATORE PAGLIA
AANDRIJVING STROËLEVATOR

Fig.	Order Ref.	CD	8070	8080 Code	Description		N.B
37	333744 4		2		Protection tube	0.5	
38	100067 7		176		Hex. lock nut		
39	427018 8		1	858	Elevator chain (Set of 3)	7.4	Incl. figs. (2 x 32) and (1 x 33)
	918279 4		1	73	Elevator chain (Set of 3)	7.4	Incl. figs. (2 x 32) and (1 x 33)
40	392932 4		2	**43**	Sprocket, RH & LH		
41	448041 2		1	**43**	Sprocket, middle		
42	321204 6		1	610	Grease fitting		
	323787 2		1	51	Grease fitting		
43	220011 5		2	71	Seal ring		

Michel ROGER

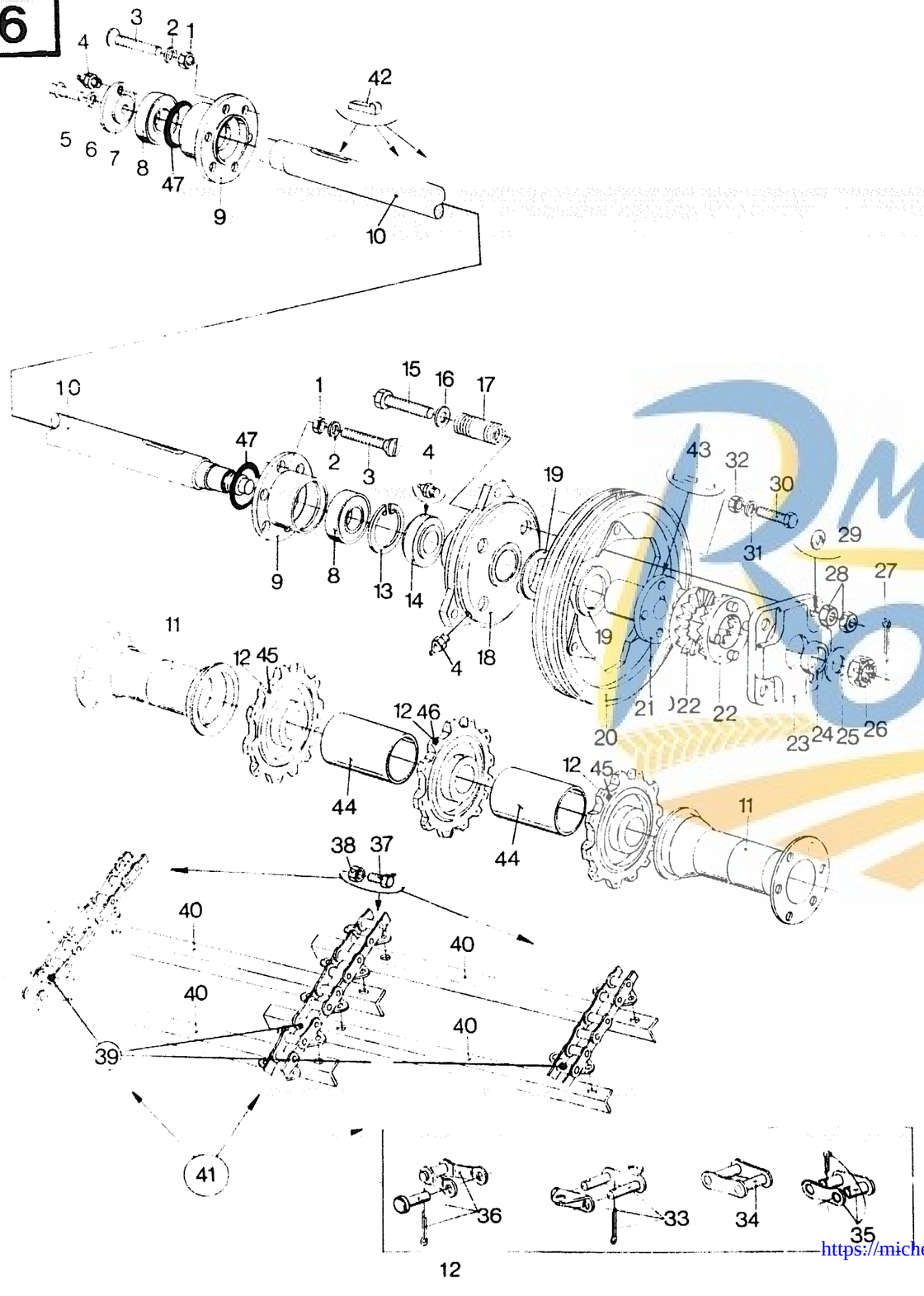

STRAW ELEVATOR DRIVE
COMMANDE DE L'ELEVATEUR DE PAILLE
STROHFORDER ANTRIEB
COMANDO CANALE ELEVATORE PAGLIA
AANDRIJVING STROELEVATOR

MODEL 8080

Fig.	Order Ref.	CD	8070	8080	Code	Description	N.B.
1	100016	0		25		Hex. nut	
2	140045	9		25		Tooth lockwasher	
3	388654	8		12		Machine screw	
4	321204	6		2		Grease fitting	
5	120120	5		1		Special bolt	
6	140046	1		2		Tooth lockwasher	
7	482744	4		1		Cover	0.3
8	210034	1		2		Ball bearing	4.8
9	394154	6		2		Bearing housing	
10	432831	9		1	329	Shaft	
	448043	6		1	610	Shaft	
	919437	1		1	56	Shaft	
11	388814	8		2		Protection tube	5.5
12	392932	4		3	329	Sprocket	
13	370018	0		1		Circlip	1.6
14	388813	6		1		Bushing	1.7
15	120214	4		4		Hex. cap screw	
16	378246	1		4		Plain washer	
17	396359	2		4		Spring	
18	387948	0		1		Hub	1.8
19	334483	1		3		Shim	
20	391118	7		1	330	"V" pulley	1.8
	449083	1		1	40	"V" pulley	
21	372843	1		1		Flange	
22	362801	1		2		Clutch half	1.7
23	362277	8		1		Clutch housing	
24	200149	2		1		Bushing	
25	378248	3		1		Plain washer	
26	309090	7		1		Hex. castle nut	
27	130012	8		1		Cotter pin	
28	100020	9		12		Hex. nut	
29	140020	7		4		Plain washer	
30	120083	5		3		Hex. cap screw	
31	140046	1		3		Tooth lockwasher	
32	337475	7		9		Hex. nut	
33	397380	8		AR		Attachment link	
34	043278	4		AR		Roller link	1.6
35	040241	4		AR		Coupler link	
36	040242	6		AR		Offset link	
37	120103	9		176		Hex. cap screw	
38	100067	7		176		Hex. lock nut	

https://michelroger.be 19

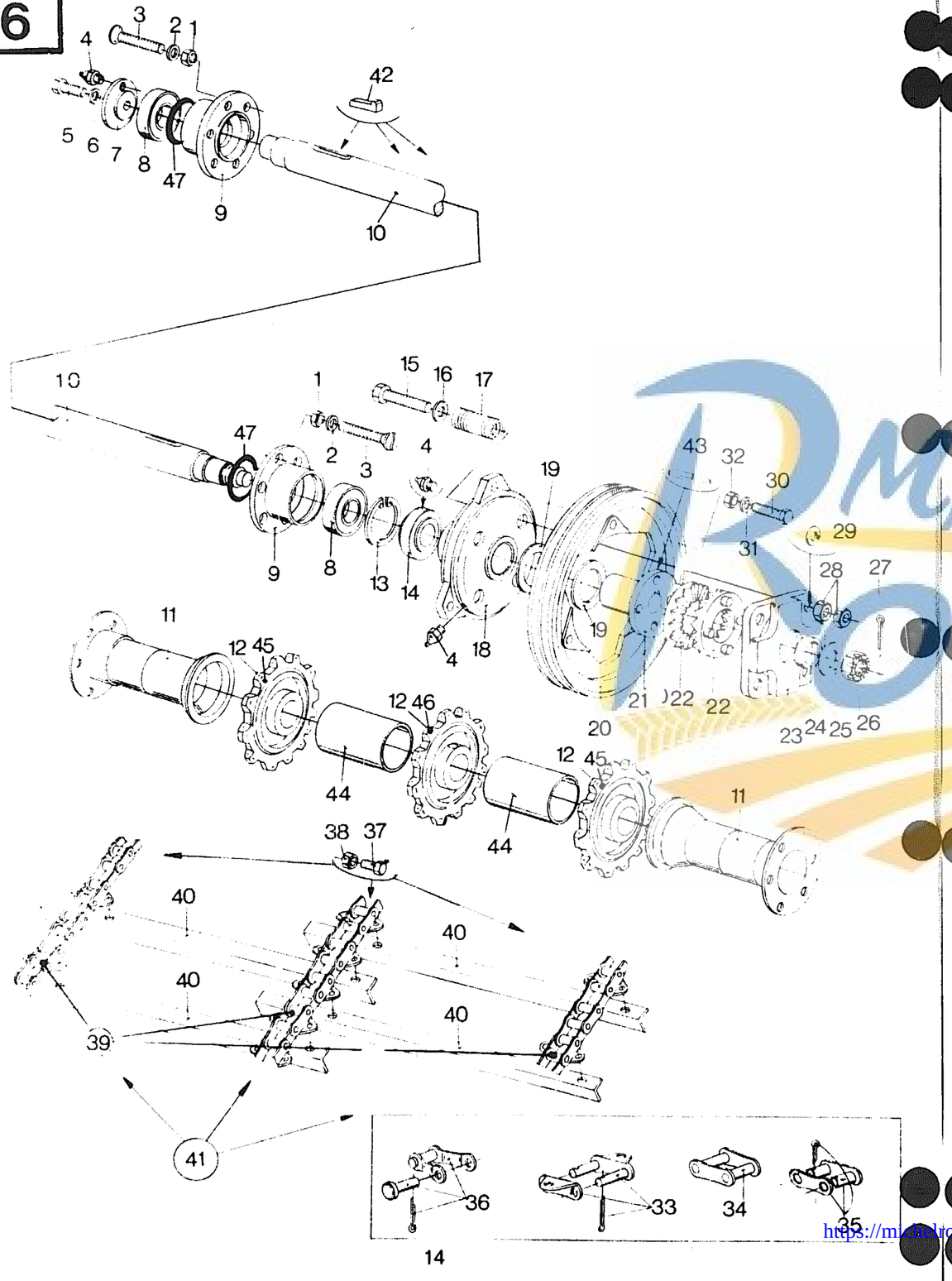

STRAW ELEVATOR DRIVE
COMMANDE DE L'ELEVATEUR DE PAILLE
STROHFORDER ANTRIEB
COMANDO CANALE ELEVATORE PAGLIA
AANDRIJVING STROELEVATOR

MODEL 8080

Fig.	Order Ref.	CD	8070	8080	Code	Description		N.B.
39	427018	8		1	611	Elevator chain (Set of 3)	3.0	Incl.figs.34,35,36 and 37
	918279	4		1	56	Elevator chain (Set of 3)		
40	388818	6		44	325	Lath	0.7	
	439181	7		44	35	Lath		
41	388819	8		1	611	Elevator chain assy.	1.9	Incl. figs. 38,39 and 40
	918281	9		1	56	Elevator chain assy.		Incl. figs. 38,39 and 40
42	412241	4		3		Key, Gib head	1.4	
43	170011	4		1		Flat key	1.7	
44	333744	4		2		Anti-wrap guard	0.5	
45	392932	4		2	39	Sprocket, RH & LH		
46	448041	2		1	39	Sprocket, middle		
47	220011	5		2	56	Seal ring		

Michel ROGER

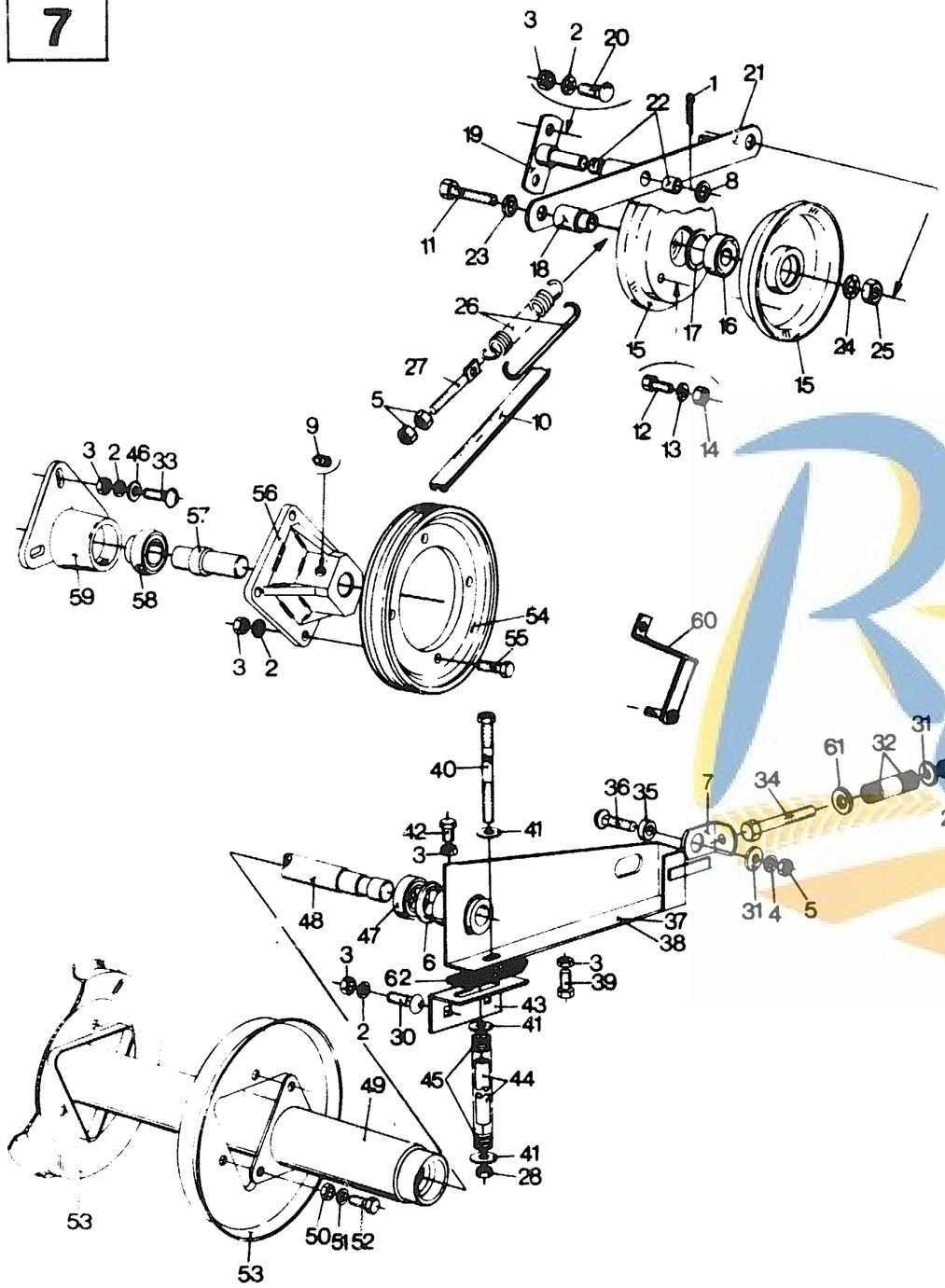

STRAW ELEVATOR DRIVE
COMMANDE DE L'ELEVATEUR DE PAILLE
SCHRÄGFÖRDERERANTRIEB
COMANDO CANALE ELEVATORE PAGLIA
AANDRIJVING STROËLEVATOR

MODEL 8070

Fig.	Order Ref.	CD	8070	8080	Code	Description	N.B
1	130008 9		4		858	Cotter pin	
	412685 4		4		73	Cotter pin	
2	140045 9		AR			Tooth lockwasher	
3	100016 6		AR			Hex. nut	
4	140046 1		3			Tooth lockwasher	
5	337475 7		3			Hex. nut	
6	393319 5		2			Seal ring	1.8
7	410858 9		2			Angle bracket	
8	140096 6		2			Plain washer	
9	300488 1		1			Set screw, socket head	
10	394426 3		1			Powerband belt	0.9
11	350613 8		2			Hex. cap screw	
12	120099 8		6			Hex. cap screw	
13	322357 0		6			Tooth lockwasher	
14	100014 6		6			Hex. nut	
15	290122 4		4			Pulley half, Idler	
16	034439 5		2			Ball bearing	1.0
17	323505 6		2			Washer	
18	377951 5		2			Bushing	1.0
19	372630 0		1		864	Support	1.0
	9507144 0		1		74	Support	1.0
20	338949 3		2			Carriage bolt	
21	394006 3		1		864	Lever assembly	Incl. fig. 22
	9507146 4		1		74	Lever assembly	Incl. fig. 22
22	332685 7		2		864	Bushing	
	382974 0		2		74	Bushing	
23	378246 1		2			Plain washer	
24	140048 5		2			Tooth lockwasher	
25	100020 9		2			Hex. nut	
26	362403 7		2		342	Spring	1.0
	441587 1		2		616	Connecting rod	
	450320 8		2		51	Connecting rod	
27	398878 4		2			Adjusting rod	
28	100037 4		2			Hex. lock nut	
29	100038 6		2			Plain washer	
30	338949 3		4			Carriage bolt	
31	140085 3		4			Plain washer	
32	379772 7		2		341	Spring	
	426325 8		2		38	Spring	
33	120245 9		3			Carriage bolt	
34	412150 1		2			Hex. cap screw	
35	427078 4		2			Bushing	0.8
36	328754 8		2			Carriage bolt	
37	427083 5		1		858	Adjusting plate, RH	2.9
	918299 6		1		73	Adjusting plate, RH	2.9

https://michelroger.be 21

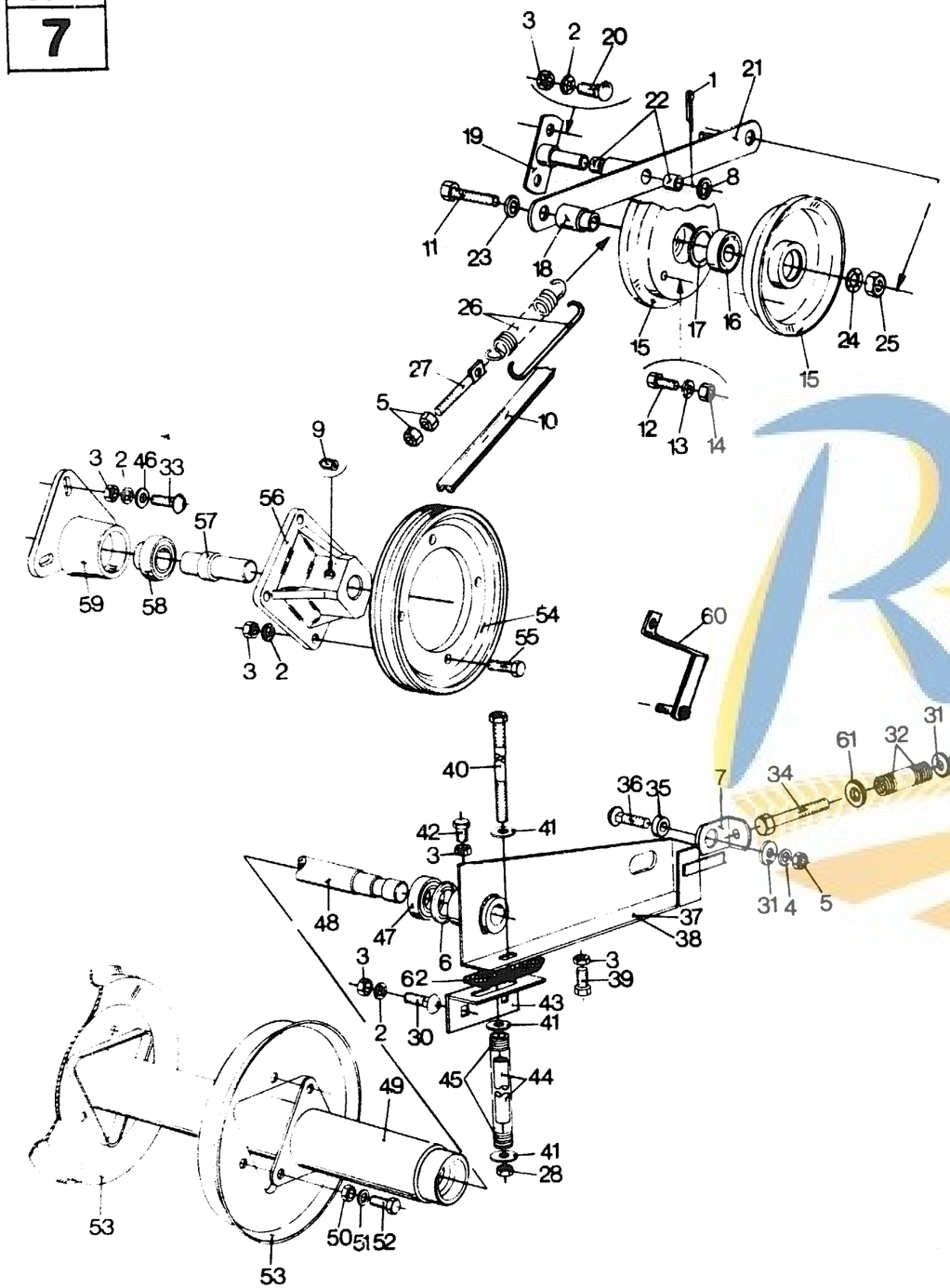

STRAW ELEVATOR DRIVE
COMMANDE DE L'ELEVATEUR DE PAILLE
STROHFORDER ANTRIEB
COMANDO CANALE ELEVATORE PAGLIA
AANDRIJVING STROËLEVATOR

MODEL 8070

Fig.	Order Ref.	CD	8070	8080	Code	Description	N.B
38	427082 2		1		858	Adjusting plate, LH	2.9
	918297 2		1		73	Adjusting plate, LH	2.9
39	120112 8		2			Hex. cap screw	
40	412005 4		2		341	Adjusting bolt	
	412350 5		2		38	Adjusting bolt	
41	395900 0		6			Plain washer	
42	120111 6		2			Hex. cap screw	
43	384222 9		2			Stop	
44	410174 9		2		610	Bushing	0.5
	449027 3		2		51	Bushing	
45	354085 1		2			Spring	0.5
46	378244 7		7			Plain washer	
47	210043 0		2			Ball bearing	4.8
48	394700 5		1			Shaft	
49	394701 7		1		858	Shaft	4.6
	442408 4		1		73	Shaft	
50	100015 8		9			Hex. nut	
51	322358 2		9			Tooth lockwasher	
52	120104 1		9			Hex. cap screw	
53	388917 6		3		858	Disc	3.5
	9503109 2		3		73	Disc	3.5
54	392682 3		1		492	"V" pulley	1.1
	449084 3		1		47	"V" pulley	
55	412466 0		4		851	Hex. cap screw	
	120201 7		4		72	Hex. cap screw	
56	427048 1		1		851	Hub	1.1
	922426 3		1		72	Hub	
57	390218 8		1			Shaft	
58	325106 2		1			Ball bearing	
59	387947 8		1		610	Bearing housing	2.1
	441020 1		1		51	Bearing housing	
60	424601 2		1			Support	
61	140087 7		2			Plain washer	
62	437773 0		2		616	Rubber bumper	
	922014 0		2		51	Rubber bumper	

https://michelroger.be

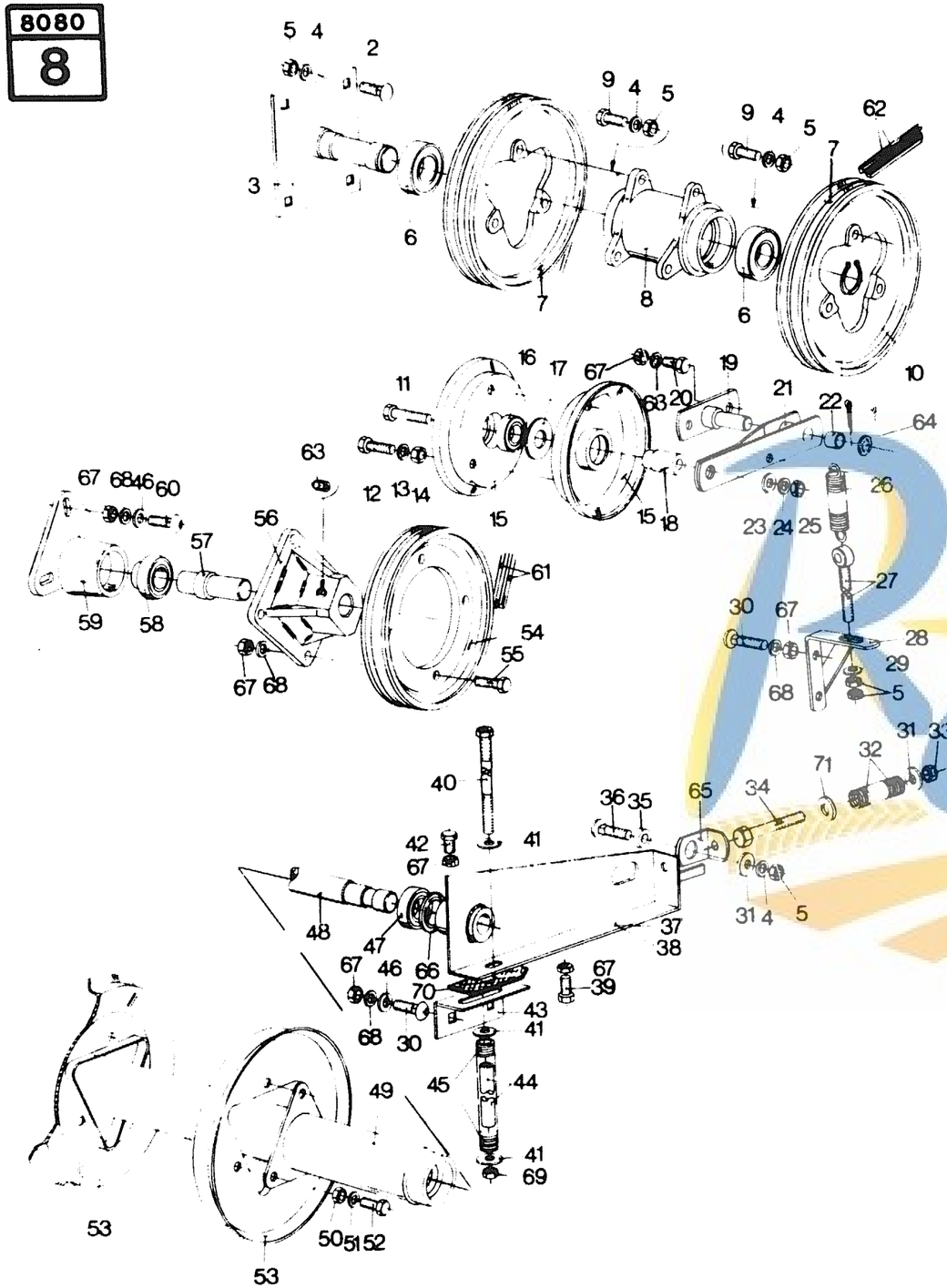

STRAW ELEVATOR DRIVE
COMMANDE DE L'ELEVATEUR DE PAILLE
STROHFORDER ANTRIEB
COMANDO CANALE ELEVATORE PAGLIA
AANDRIJVING STROËLEVATOR

MODEL 8080

Fig.	Order Ref.	CD	8070	8080	Code	Description	N.B
1	130008 9		4	4	618	Cotter pin	
	412685 4		4	4	35	Cotter pin	
2	120044 3		4	4		Carriage bolt	
3	388797 0		1	1		Support	1.8
4	140046 1		3	3		Tooth lockwasher	
5	337475 7		3	3		Hex. nut	
6	025953 4		2	2		Ball bearing	1.7
7	391117 5		2	2		"V" pulley	1.5
8	387946 6		1	1		Hub	1.7
9	120080 9		69	69		Hex. cap screw	
10	370004 1		1	1		Circlip	
11	374889 9		2	2		Hex. cap screw	
12	120099 8		6	6		Hex. cap screw	
13	322357 0		6	6		Tooth lockwasher	
14	100014 6		4	4		Hex. nut	
15	290122 4		4	4		Pulley half, Idler	
16	034439 5		2	2		Ball bearing	1.0
17	323505 6		2	2		Washer	
18	396864 3		2	2		Bushing	
19	388804 7		2	2		Support	
20	120110 4		4	4		Hex. cap screw	
21	388801 1		2	2		Lever assembly	Incl.fig.22
22	382974 0		2	2		Bushing	
23	378246 1		2	2		Plain washer	
24	140048 5		2	2		Tooth lockwasher	
25	100020 9		2	2		Hex. nut	
26	362403 7		2	2		Spring	1.0
27	398878 4		2	2		Adjusting rod	
28	388808 5		2	2		Bracket	
29	378245 9		2	2		Plain washer	
30	338949 3		4	4		Carriage bolt	
31	140085 3		4	4		Plain washer	
32	379772 7		2	2	325	Spring	
	426325 8		2	2	35	Spring	
33	412126 8		2	2		Hex. lock nut	
34	412150 1		2	2		Hex. cap screw	
35	427078 4		2	2		Bushing	0.8
36	328754 8		2	2		Carriage bolt	
37	427083 5		1	1	613	Adjusting plate, LH	2.9
	918299 6		1	1	49	Adjusting plate, LH	2.9
38	427082 3		1	1	613	Adjusting plate, RH	2.9
	918297 2		1	1	49	Adjusting plate, RH	2.9
39	120112 8		2	2		Hex. cap screw	

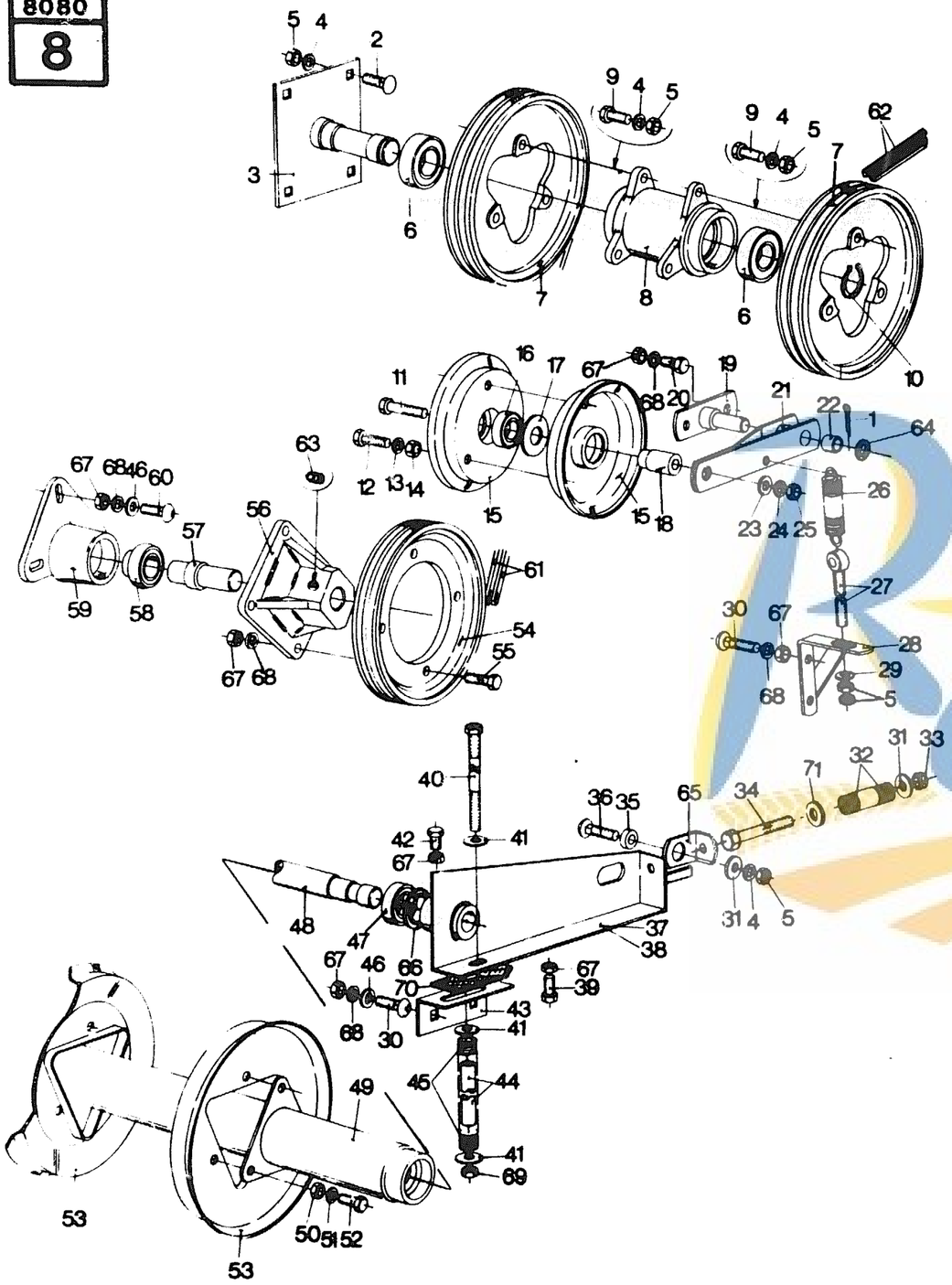

STRAW ELEVATOR DRIVE
COMMANDE DE L'ELEVATEUR DE PAILLE
STROHFORDER ANTRIEB
COMANDO CANALE ELEVATORE PAGLIA
AANDRIJVING STROËLEVATOR

MOODEL 8080

Fig.	Order Ref.	CD	8070	8080	Code	Description	N.B
40	412005 4		2		325	Adjusting bolt	
	412350 5		2		364	Adjusting bolt	
	412579 9		2		43	Adjusting bolt	
41	395900 0		6			Plain washer	
42	120111 6		2			Hex. cap screw	
43	384222 9		2			Stop	
44	410174 9		2		333	Bushing	0.5
	449027 3		2		43	Bushing	
45	354085 1		2			Spring	
46	378244 7		7			Plain washer	
47	210043 0		2			Ball bearing	
48	388918 8		1			Shaft	4.8
49	388916 4		1			Shaft	
50	100015 8		9			Hex. nut	
51	322358 2		9			Tooth lockwasher	
52	120104 1		9			Hex. cap screw	
53	388917 6		3			Disc	3.5
54	392682 3		1		330	"V" pulley	1.1
	449084 3		1		40	"V" pulley	1.1
55	412466 0		4		613	Hex. cap screw	
	120201 7		4		49	Hex. cap screw	
56	427049 3		1		613	Hub	1.1
	922427 5		1		49	Hub	1.1
57	390218 8		1			Shaft	
58	325106 2		1			Ball bearing	
59	387947 8		1		330	Bearing housing	2.1
	441020 1		1		40	Bearing housing	
60	120245 9		3			Carriage bolt	
61	387931 5		1			"V" belt (Set of 2)	1.1
62	391143 0		1			"V" belt (Set of 2)	1.3
63	300488 1		1			Set screw, socket head	
64	140096 6		2			Plain washer	
65	410858 9		2			Angle bracket	
66	393319 5		2			Seal ring	1.8
67	100016 0		AR			Hex. nut	
68	140045 9		AR			Tooth lockwasher	
69	412141 2		2			Hex. lock nut	
70	442534 1		2		379	Rubber bumper	
	450191 3		2		618	Rubber bumper	
	922014 0		2		56	Rubber bumper	
71	140087 7		2		35	Plain washer	

ROGER
https://michelroger.be

Michel ROGER GROUP

9 ➧ 12A

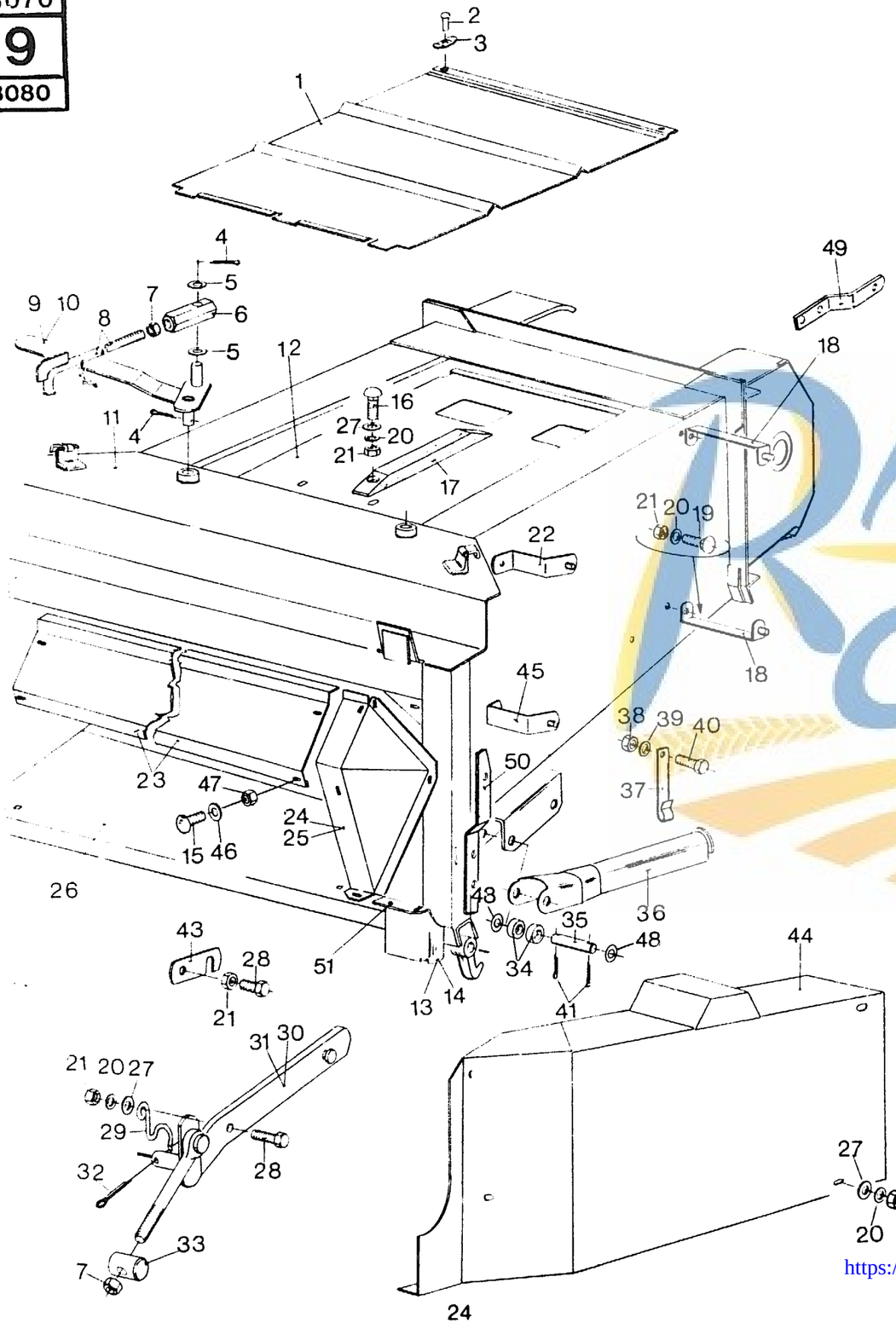

STRAW ELEVATOR
ELEVATEUR DE PAILLE
STROHFORDER
CANALE ELEVATORE PAGLIA
STROËLEVATOR

MODEL 8070-8080

Fig.	Order Ref.	CD	8070	8080	Code	Description	N.B
1	390229 1			1		Cover	
	394521 5		1			Cover	
2	130024 3		2	2		Rivet	
3	362786 7		2	2		Turnbuckle	
4	130010 4		4	4		Cotter pin	
5	140096 6		10	10		Plain washer	
6	488131 1		2	2		Adjusting block	0.4
7	100020 9		4	4		Hex. nut	
8	354307 3		2	2		Adjusting rod	
9	354301 1		1	1		Lever, RH	0.4
10	354302 3		1	1		Lever, LH	
11	427126 7			1	326	Elevator casing	10.7
	427127 5		1		344	Elevator casing	
	444791 7			1	379	Elevator casing	
	451393 2			1	43	Elevator casing	
	444792 9		1		610	Elevator casing	
	451394 4		1		51	Elevator casing	
12	390213 8			1	610	Plate	
	750804 7			1	55	Plate	
	394660 9		1		850	Plate	
	750802 3		1		71	Plate	
13	410518 9			1	333	Cover, RH	
	449261 9			1	615	Cover	
	918127 3			1	55	Cover	
14	410517 7			1	333	Cover, LH	
	449260 7			1	615	Cover	
	918126 1			1	55	Cover	
15	120031 6		19	19		Carriage bolt	
16	308761 9		6	6		Carriage bolt	
17	392459 0		3	3		Chain support	
18	390732 8			2		Bracket	
	394654 6		4			Bracket	
19	120037 8		2	2		Carriage bolt	
20	322358 2		2	2		Tooth lockwasher	
21	100015 8		2	2		Hex. nut	
22	390733 0			1		Bracket	
23	390293 6			1	610	Plate	
	754992 8			1	55	Plate	
	394519 0		1		858	Plate	
	754218 8		1		73	Plate	

https://michelroger.be

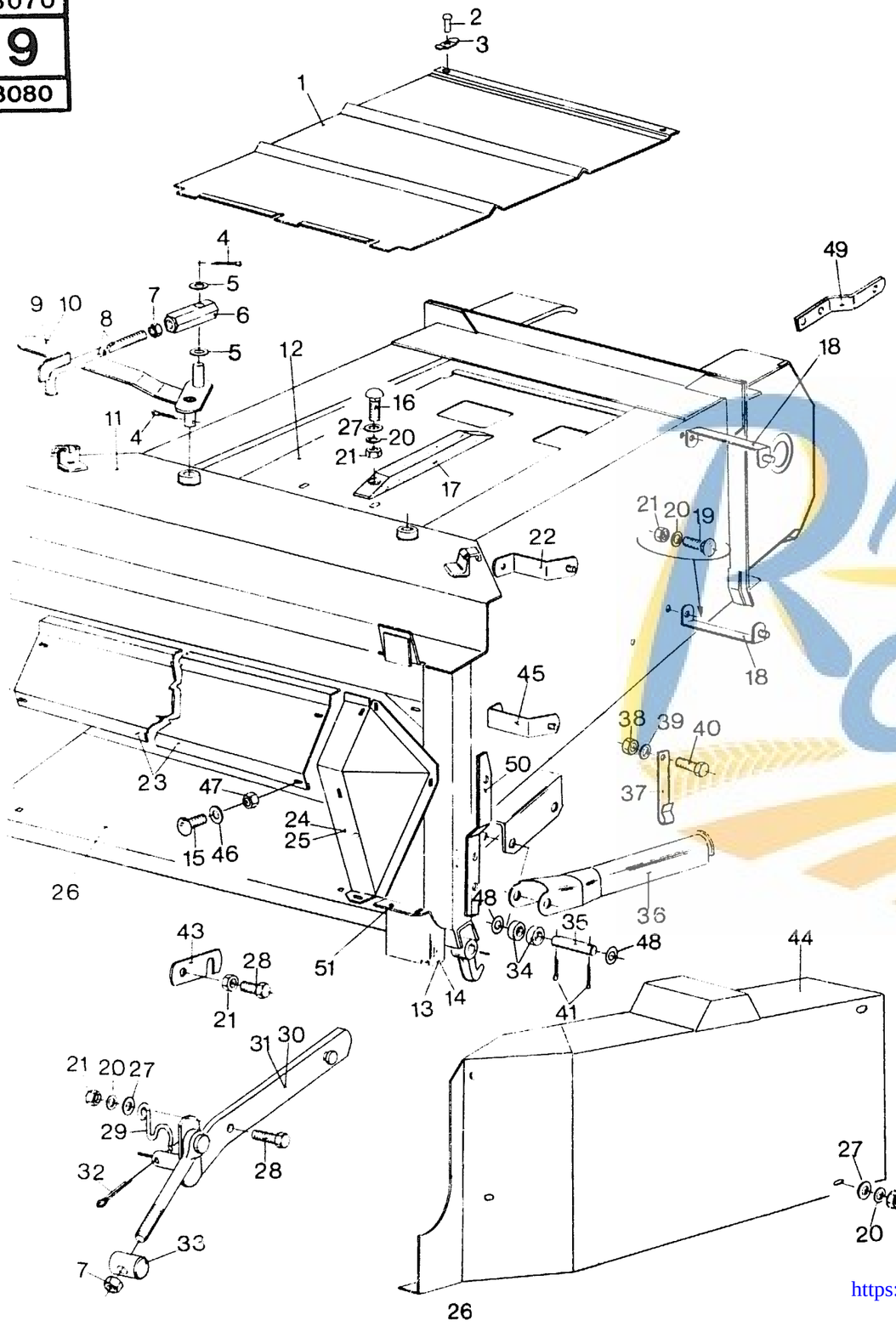

STRAW ELEVATOR
ELEVATEUR DE PAILLE
STROHFORDER
CANALE ELEVATORE PAGLIA
STROËLEVATOR

Fig.	Order Ref.	CD	8070	8080	Code	Description	N.B
24	390224 1		1		504	Cap, RH	
	449564 1		1		859	Cap, RH	
	918129 7		1		73	Cap, RH	
	390224 1			1	330	Cap, RH	
	449564 1			1	614	Cap, RH	
	918129 9			1	55	Cap, RH	0.7
25	390222 7		1		504	Cap, LH	
	449565 3		1		859	Cap, LH	
	918128 5		1		73	Cap, LH	
	390222 7			1	330	Cap, LH	
	449565 3			1	614	Cap, LH	
	918128 5			1	56	Cap, LH	
26	390219 0			1		Bottom plate	1.2
	397000 4		1			Bottom plate	1.2
27	378243 5		2	2		Plain washer	
28	120161 1		2	2		Hex. cap screw	
29	360379 2		2		610	Spring clip	
	360379 2			2	333	Spring clip	
30	388716 0		1		610	Lever, LH	
	388716 0			1	333	Lever	
31	388717 2		1		610	Lever, RH	
	388717 2			1	333	Lever	
32	130008 9		2	2		Cotter pin	
33	354309 7		2		610	Pivot nut	0.4
	354309 7			2	333	Pivot nut	0.4
34	321603 2		2	2		Spacer ring, RH	0.5
	332673 2			2		Spacer ring, LH	
35	426932 5		2	2		Pivot pin	
36	354679 0		1	1		Safety latch	0.4
37	332672 0		1	1		Spring clip	
38	100014 6		1	1		Hex. nut	
39	322357 0		1	1		Tooth lockwasher	
40	120100 3		1	1		Hex. cap screw	
41	130014 2		4	4		Cotter pin	
42	100005 7		4	4		Wing nut	
43	338514 2		2	2		Hook	
44	394653 4		1		342	Guard	0.4
	439060 1		1		616	Guard	0.4
	452470 7		1		51	Guard	0.4
	420505 4			1	519	Guard	0.4
	747420 8			1	48	Guard	0.4
45	390737 8			1		Bracket	

https://michelboger.be

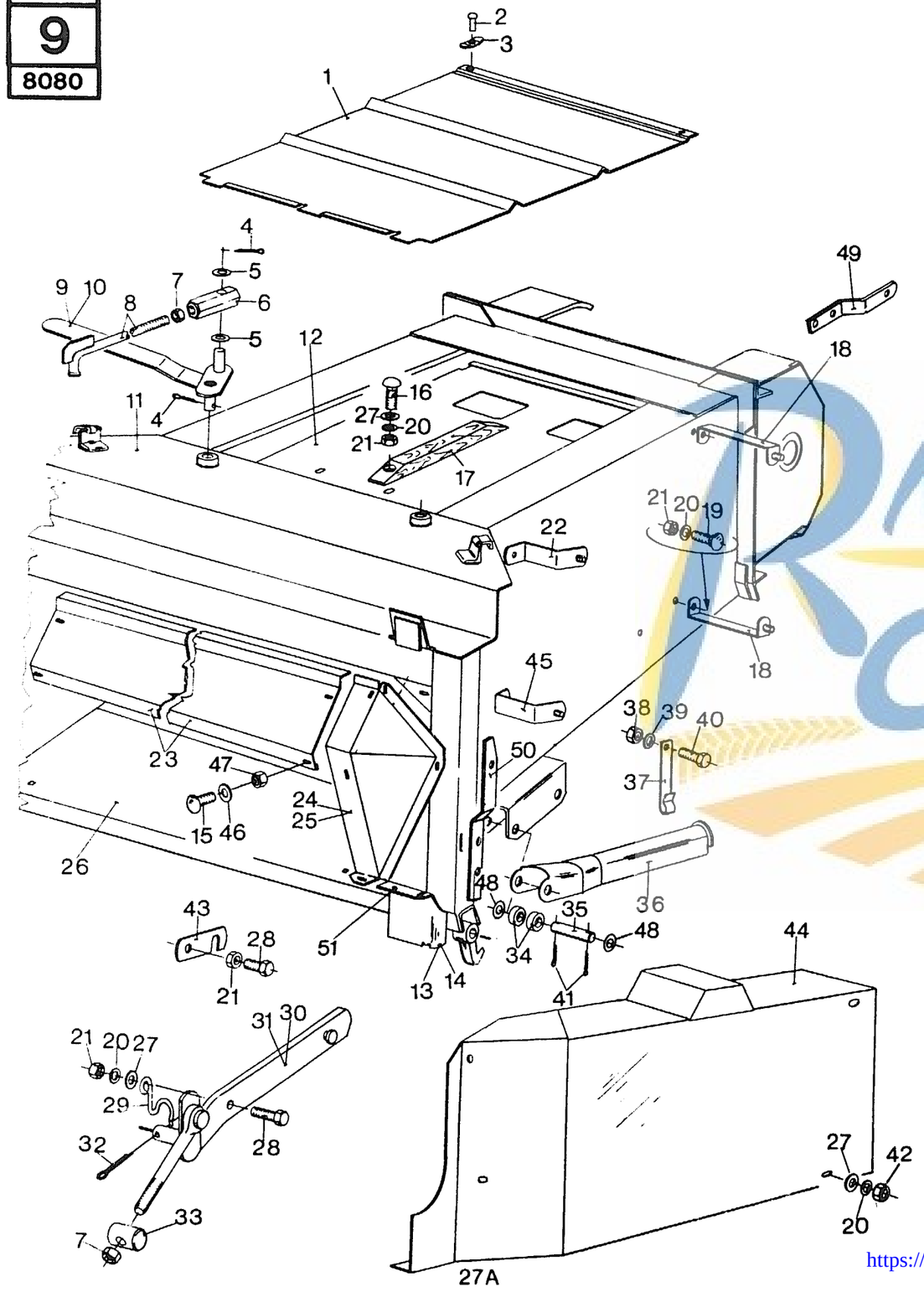

STRAW ELEVATOR
ELEVATEUR DE PAILLE
STROHFORDER
CANALE ELEVATORE PAGLIA
STROËLEVATOR

Fig.	Order Ref.	CD	8070	8080	Code	Description	N.B
46	140040 9		12	12		Plain washer	
47	353308 4			12		Hex. lock nut	
48	140103 3			4		Plain washer	
49	452723 4		1			Support	
50	433873 8		1	1		Lever	
51	394657 2		1		860	Angle	
	918302 5		1		73	Angle	
	9512703 3		2			Angle	

Michel ROGER

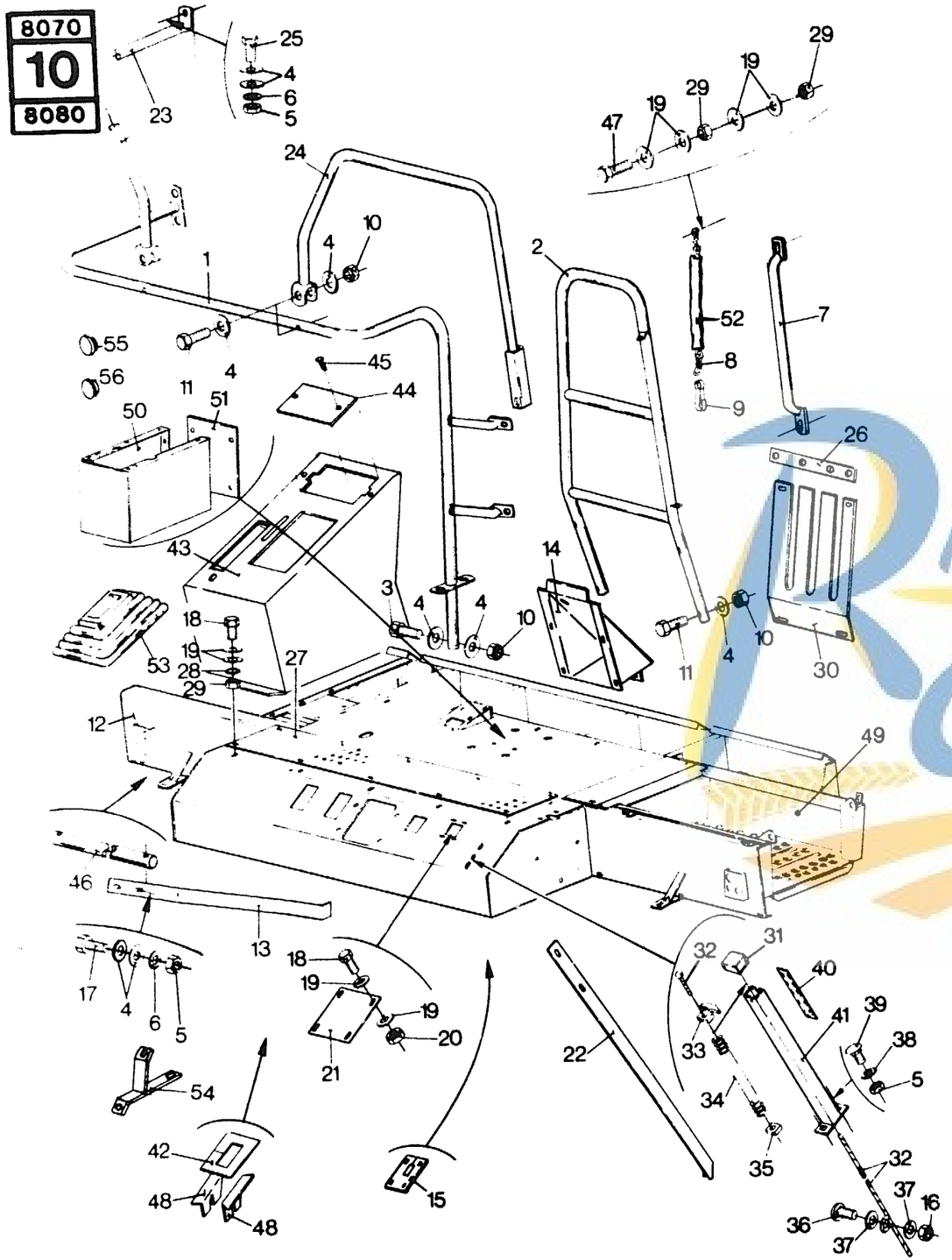

OPERATOR'S PLATFORM
PLATE-FORME
FAHRERSTAND
PIATTAFORMA DI GUIDA
STUURPLATFORM

MODEL 8070 - 8080

Fig.	Order Ref.	CD	8070	8080	Code	Description	N.B.
1	425640	5	1	1		Handrail	
2	432737	9	1	1		Handrail	
3	120106	5	2	2		Hex. cap screw	
4	378243	5	8	8		Plain Washer	
5	100015	8	12	12		Hex. nut	
6	322358	2	12	12		Tooth lockwasher	
7	388476	0	1	2		Hand grip	
8	323222	6	1	1		Chain	
9	354957	0	1	1		Hook	
10	412250	3	7	7		Hex. lock nut	
11	120107	7	4	4		Hex. cap screw	
12	425740	7		1		Platform w/a	
	432562	8	1			Platform w/a	
13	417993	2	1	1		Support	
14	396844	1	1	1		Seal plate	
15	396831	4	1	1		Seal	
16	100016	0	1	1		Hex. nut	
17	120161	1	8	8		Hex. cap screw	
18	120099	8	10	10		Hex. cap screw	
19	140015	6	16	16		Plain washer	
20	353308	4	4	4		Hex. lock nut	
21	398126	9	1	1		Cover	
22	421778	2	1	1		Support	
23	432520	0	1	1		Handrail	Right-hand
24	432522	4	1	1		Handrail	Left-hand
25	120104	1	6	6		Hex. cap screw	
26	420379	5	1	1		Lath	
27	427448	9	1	1		Anti slip plate	
28	322357	0	8	8		Tooth lockwasher	
29	100014	6	8	8		Hex. nut	
30	420209	6	1	1		Cover	
31	426305	6	1	1		Cover	
32	431888	7	1	1		Cable	
33	426303	2	1	1		Indicator	
34	426310	7	1	1		Spring	
35	426297	7	1	1		Bushing	
36	120041	7	1	1		Carriage bolt	
37	140017	0	2	2		Plain Washer	
38	140016	8	2	2		Plain Washer	
39	120037	8	2	2		Carriage bolt	
40	430347	0	1	1		Decal	
41	437904	9	1	1		Tube	
42	396832	6	3	3		Seal	

https://michelroger.be

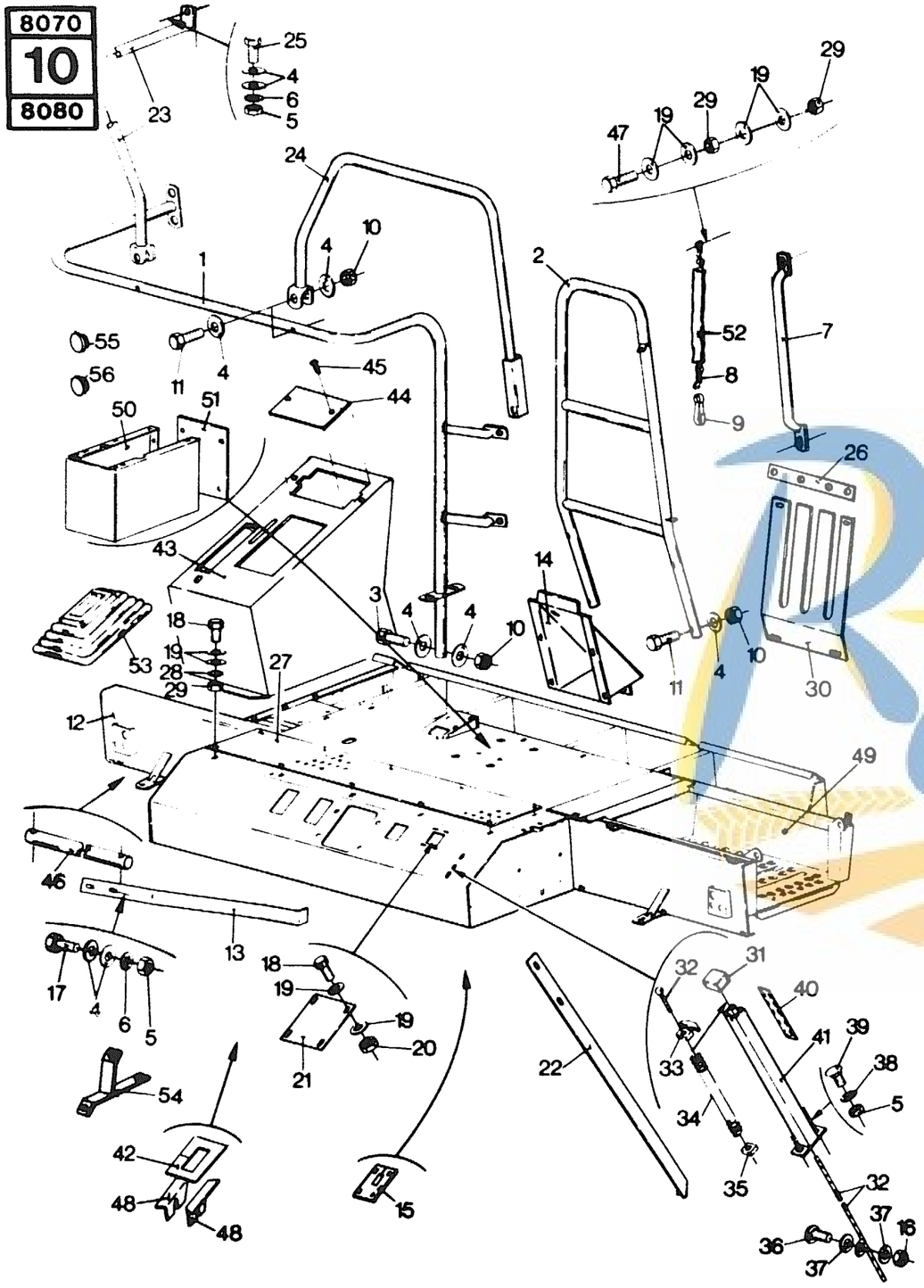

OPERATOR'S PLATFORM
PLATE-FORME
FAHRERSTAND
PIATTAFORMA DI GUIDA
STUURPLATFORM

MODEL 8070-8080

Fig.	Order Ref.	CD	8070	8080	Code	Description	N.B
43	428853 9		1	1		Console	
44	433529 9		1	1		Cover	
45	412114 5		2	2		Machine screw	
46	432748 2			1	619	Shaft	
	922832 4			1	58	Shaft	
	432749 4		1		858	Shaft	
	922835 0		1		73	Shaft	
47	120101 5		1	1		Hex. cap screw	
48	396833 8		1		346	Bracket	
	445400 1		1		44	Bracket, RH	
	445400 1			1	44	Bracket, RH	
	445401 3		1		44	Bracket, LH	
	445401 3			1	44	Bracket, LH	
49	388515 4		1	1		Upper step	0.8
50	432244 4			1	322	Support	
	439116 0			1	343	Support	
	448404 2			1	40	Support	
	439116 0		1		438	Support	
	448404 2		1		45	Support	
51	432243 2			1	322	Plate	
52	396141 1		1	1		Chain covering	
53	423918 3		1	1		Bellows	
54	441397 8		1		38	Bracket	
55	436173 7		1		38	Plug	
56	432621 4		1		38	Plug	

MICHEL ROGER

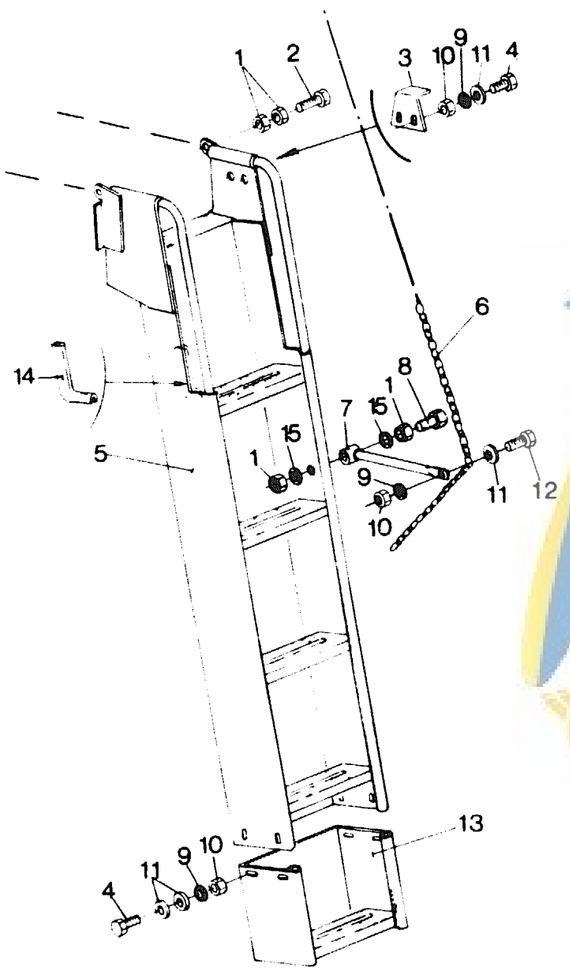

OPERATOR'S PLATFORM LADDER
ESCALIER VERS PLATE-FORME DE CONDUITE
STEIGLEITER FÜR FAHRERPLATFORM
SCALETTA D'ACCESSO ALLA PIATTAFORMA DI GUIDA
TRAP VOOR STUURPLATFORM

MODEL 8070 - 8080

Fig.	Order Ref.	CD	8070	8080	Code	Description	N.B.
1	100016	0	8	8		Hex. nut	
2	120111	6	2	2		Hex. cap screw	
3	392332	2	1	1		Bracket	
4	120104	1	6	6		Hex. cap screw	
5	388614	4	1	1		Ladder w/a	0.5
6	396142	3	1	1		Chain	
7	393931	3	1	1		Arm	
8	120114	2	1	1		Hex. cap screw	
9	322358	2	AR	AR		Tooth lockwasher	
10	100015	8	AR	AR		Hex. nut	
11	378243	5	AR	AR		Plain washer	
12	120161	1	2	2		Hex. cap screw	
13	393501	2	1	1		Step extension	
14	417115	2	2	2		Protection strip	
15	140045	9	2	2		Tooth lockwasher	

https://michelroger.be

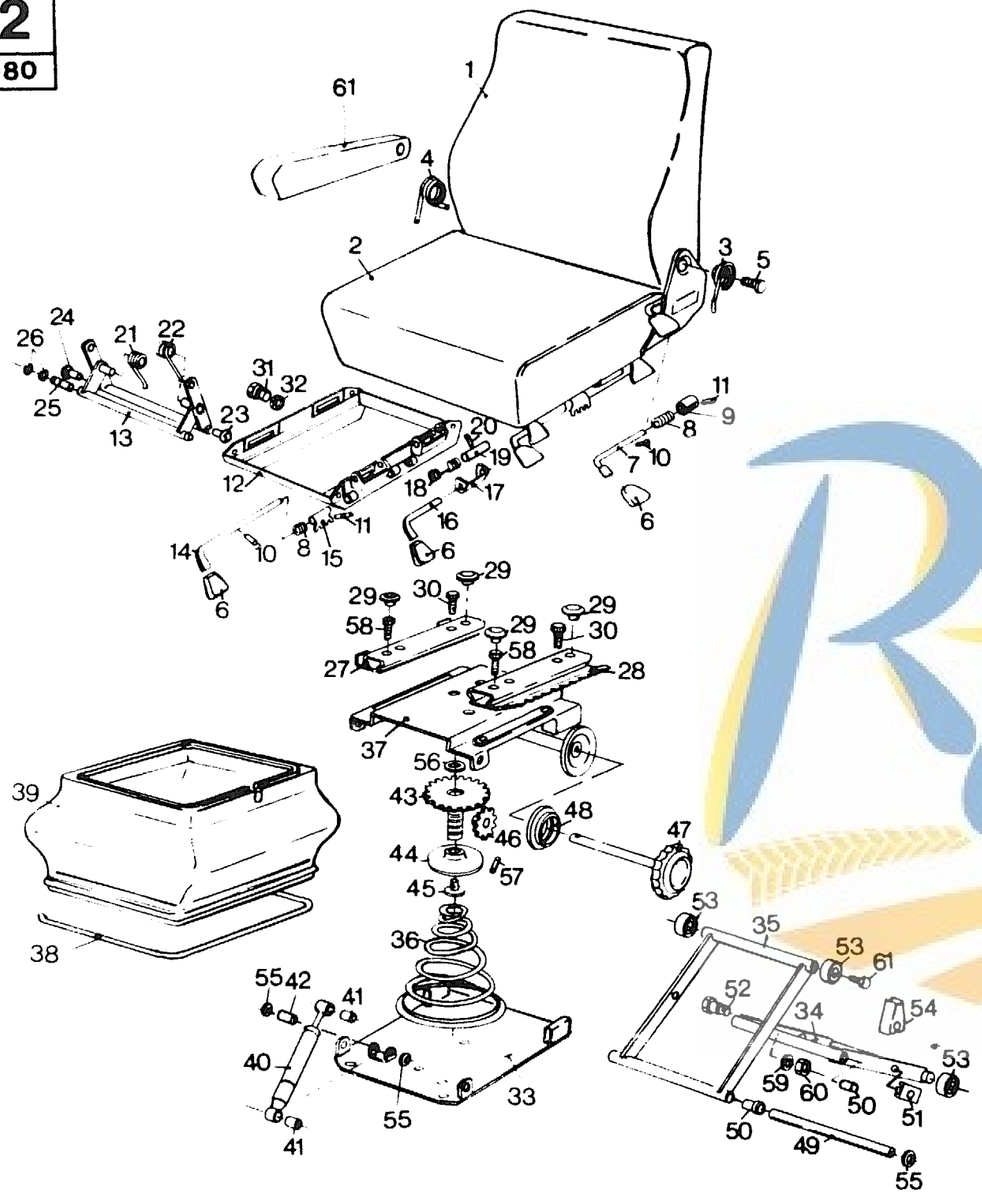

SEAT
SIEGE
SITZ
SEDILE DEL CONDUCENTE
STUURZETEL

MODEL 8070 - 8080

Fig.	Order Ref.	CD	8070	8080	Code	Description	N.B.
1	432351	1	1	1	*	Seat back	
2	432352	3	1	1	*	Seat cushion	
3	432353	5	1	1	*	Spring	
4	432354	7	1	1	*	Spring	
5	432355	9	2	2	*	Screw	
6	432356	1	4	4	*	Knob	
7	432357	3	1	1	*	Lever	
8	432358	5	2	2	*	Spring	
9	432359	7	1	1	*	Seal	
10	412221	2	2	2	*	Pin	
11	412222	4	2	2	*	Roll pin	
12	432376	3	1	1	*	Frame	
13	432377	5	2	2	*	Support	
14	432378	7	1	1	*	Lever	
15	432379	9	1	1	*	Tooth lever	
16	432380	2	2	2	*	Lever	
17	432381	4	2	2	*	Tooth support	
18	432382	6	2	2	*	Spring	
19	432384	0	2	2	*	Bushing	
20	412223	6	2	2	*	Roll pin	
21	432385	2	2	2	*	Spring	
22	432386	4	2	2	*	Spring	
23	432387	6	2	2	*	Rod	
24	432388	8	2	2	*	Guide	
25	432389	0	2	2	*	Guide	
26	412226	2	4	4	*	Circlip	
27	432383	8	1	1	*	Seat runner	] 0.5
28	432390	3	1	1	*	Seat runner	
29	432391	5	4	4	*	Guide disc	
30	120229	5	4	4	*	Screw	
31	432392	7	1	1	*	Screw	
32	412227	4	1	1	*	Tooth lockwasher	
33	432393	9	1	1	*	Base plate	
34	432394	1	1	1	*	Frame	
35	432395	3	1	1	*	Frame	
36	432396	5	1	1	*	Spring	
37	432397	7	1	1	*	Plate	
38	432398	9	1	1	*	Wire frame	
39	432399	1	1	1	*	Bellows	
40	432400	6	1	1	*	Shock absorber	
41	432401	8	2	2	*	Bearing bushing	
42	432402	0	1	1	*	Bearing bolt	
43	432403	2	1	1	*	Tooth wheel	

https://michelroger.be 32

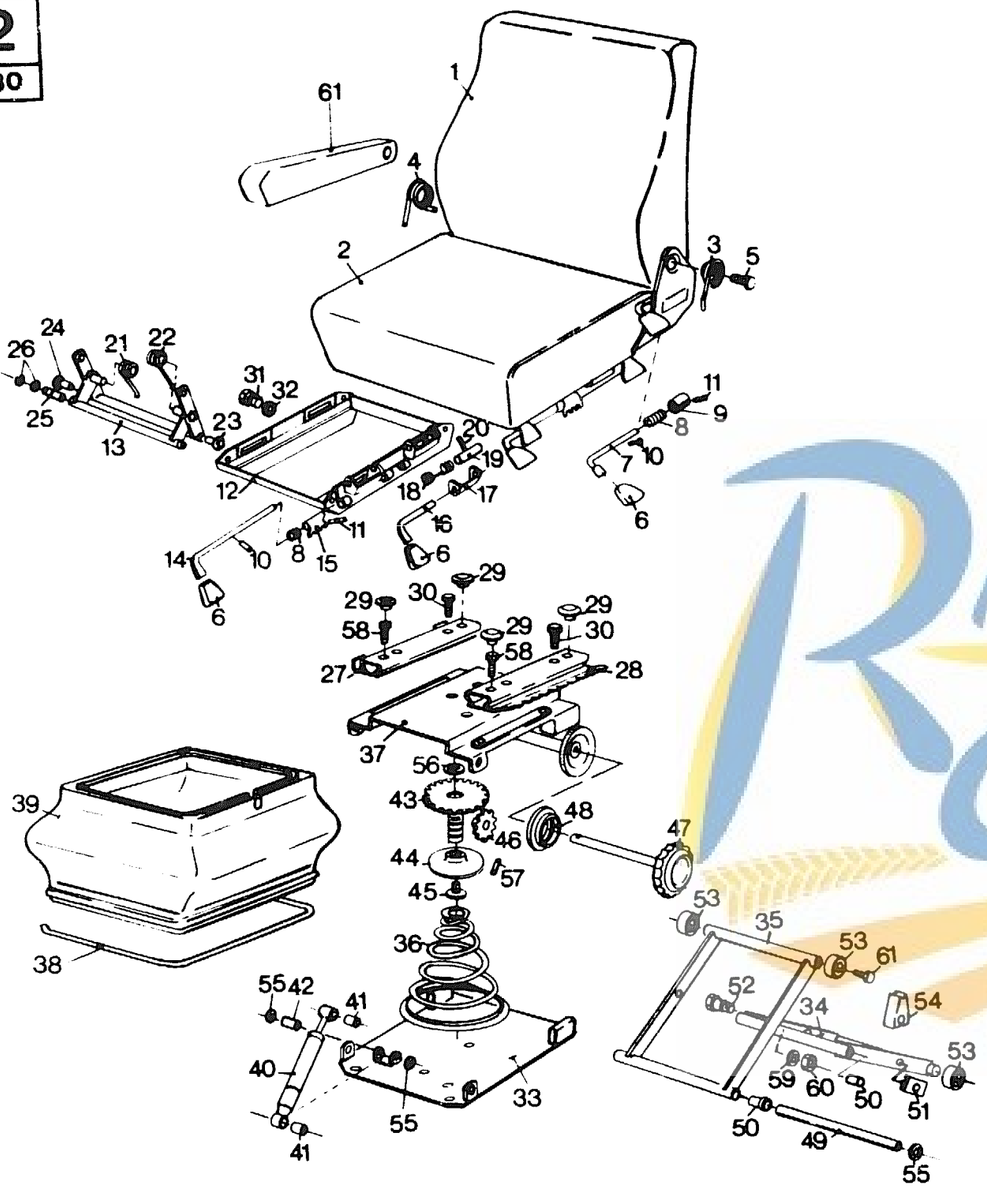

SEAT
SIEGE
SITZ
SEDILE DEL CONDUCENTE
STUURZETEL

MODEL 8070 - 8080

Fig.	Order Ref.	CD	8070	8080	Code	Description	N.B.
44	432404	4	1	1	*	Special nut	
45	432405	6	1	1	*	Lock screw	
46	432406	8	1	1	*	Sprocket	
47	432407	0	1	1	*	Adjusting screw	
48	432408	2	1	1	*	Disc, Scale reading	
49	432409	4	1	1	*	Shaft	
50	432410	7	4	4	*	Bushing	
51	432411	9	2	2	*	Bushing	
52	432412	1	2	2	*	Screw	
53	432413	3	4	4	*	Ball bearing	
54	432414	5	1	1	*	Block	
55	412225	0	6	6	*	Circlip	
56	432415	7	1	1	*	Washer	
57	412224	8	1	1	*	Roll pin	
58	300436	2	4	4	*	Screw	
59	412228	6	2	2	*	Plain washer	
60	100067	7	2	2	*	Hex. lock nut	
61	432416	9	1	1	*	Arm rest	

https://michelroger.be 33

8070
12A
8080

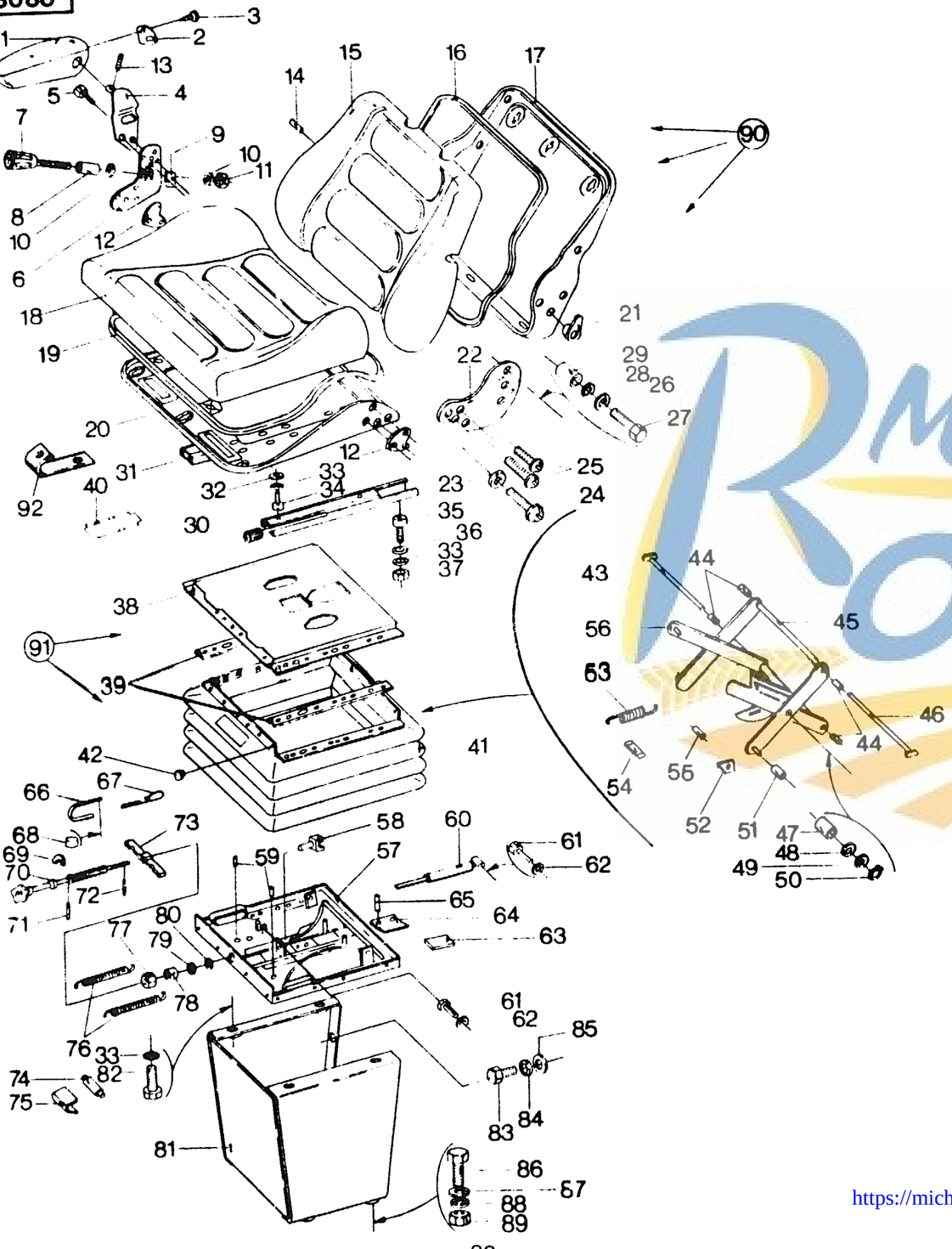

OPERATOR'S SEAT
SIEGE
SITZ
SEDILE DEL CONDUCENTE
STUURZETEL

ONLY VALID FROM SERIAL No : 4227001 (8070)
4122001 (8080)

MODEL 8070 - 8080

Fig.	Order Ref.	CD	8070	8080	Code	Description	N.B
1	448439 5		1	1		Arm rest	
2	448438 3		1	1		Cover	
3	412540 8		1	1		Screw	
4	448441 0		1	1		Support	
5	412510 5		2	2		Screw	
6	446898 5		1	1		Bracket, RH	
7	448437 1		1	1		Handle	
8	448434 5		1	1		Tube	
9	446897 3		1	1		Spacer	
10	331162 8		2	2		Plain washer	
11	100037 4		1	1		Lock nut	
12	446893 5		2	2		Spacer plate	
13	412541 0		1	1		Stud	
14	446902 6		1	1		Shaft	
15	448518 3		1	1		Seat back	Without operator's cab
	448444 6		1	1		Seat back	With operator's cab
16	448436 9		1	1		Protection strip	
17	448445 8		1	1		Back plate	
18	448517 7		1	1		Seat cushion	Without operator's cab
	448443 4		1	1		Seat cushion	With operator's cab
19	448440 8		1	1		Protection strip	
20	448435 7		1	1		Bottom plate	
21	446887 2		1	1		Spacer	
22	446888 4		1	1		Bracket, LH	
23	412505 4		2	2		Tooth lockwasher	
24	412504 2		2	2		Screw	
25	412503 0		2	4		Screw	
26	412228 6		4	4		Disc	
27	412502 8		4	4		Hex. cap screw	
28	412522 0		4	4		Washer	
29	446889 6		4	4		Tube	
30	9501068 2		1	1		Set seat runner	Incl. fig. 31
31	N.S.		1	1		Seat runner	Part of fig. 30
32	378244 7		4	4		Washer	
33	322358 2		14	14		Tooth lockwasher	
34	120018 8		4	4		Screw	
35	120020 3		6	6		Screw	
36	140016 8		6	6		Plain washer	
37	336256 2			6		Hex. nut	
	336256 2		6		746	Hex. nut	
	100015 8		6		76	Hex. nut	

https://michelroger.be

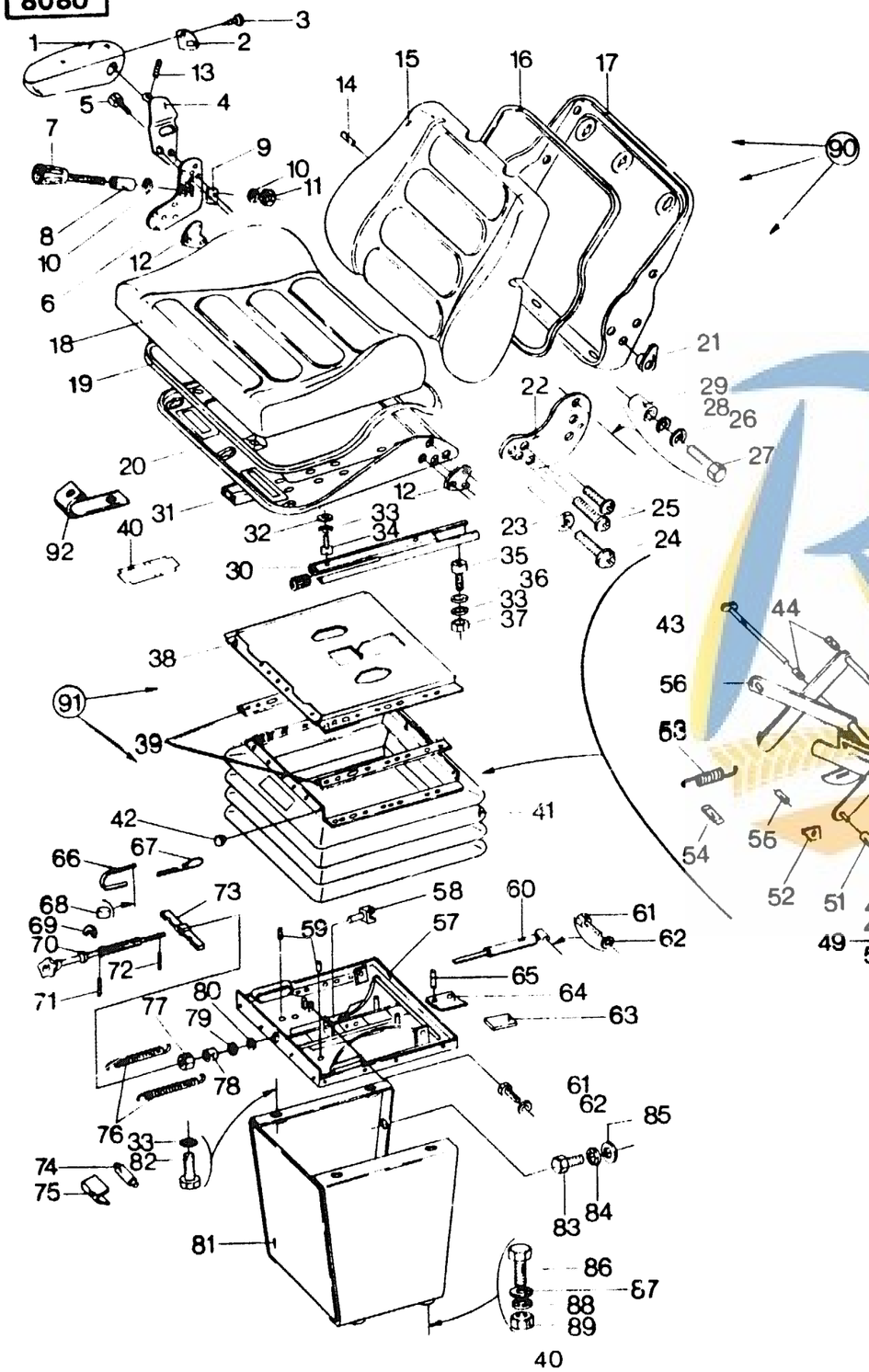

OPERATOR'S SEAT
SIEGE
SITZ
SEDILE DEL CONDUCENTE
STUURZETEL

ONLY VALID FROM SERIAL No : 4227001 (8070)
4122001 (8080)

MODEL 8070 - 8080

Fig.	Order Ref.	CD	8070	8080	Code	Description	N.B
38	4469153		1		758	Support plate	
	4577289		1		55	Support plate	
	4469153			1	500	Support plate	
	4577289			1	47	Support plate	
39	4469278		2	2		Reinforcement	
40	4469280		1	1		Cover	
41	4469139		1	1		Bellows	
42	4469141		26	26		Plug	
43	4469165		1	1		Shaft	
44	4469177		4	4		Bushing	
45	4469189		1	1		Hinge	
46	4469191		1	1		Shaft	
47	4469204		2	2		Bushing	
48	4125232		2	2		Washer	
49	4125066		2	2		Washer	
50	4125143		2	2		Circlip	
51	4469216		4	4		Roller	
52	4469228		2	2		Plate	
53	4469230		2	2		Spring	
54	4469242		1	1		Plate	
55	4469254		1	1		Shaft	
56	4469266		1	1		Hinge	
57	4484422		1		758	Support assembly	Incl. figs. 61,63,64 and 65
	4577304		1		55	Support	
	4484422			1	500	Support assembly	Incl. figs. 61,63,64 and 65
	4577304			1	47	Support	
58	4469456		1		758	Fork	
	4577330		1		55	Fork	
	4469456			1	500	Fork	
	4577330			1	47	Fork	
59	4469444		2	2		Plug	
60	4469292		1		758	Shock absorber	
	4577291		1		55	Shock absorber	
	4469292			1	500	Shock absorber	
	4577291			1	47	Shock absorber	
61	4125155		2	2		Hex. cap screw	
62	4125167		2	2		Lock ring	
63	4469329		1	1		Plate	
64	4469317		1	1		Profile	
65	4469305		2	2		Pin	

https://michelroger.be 35

8070
12A
8080

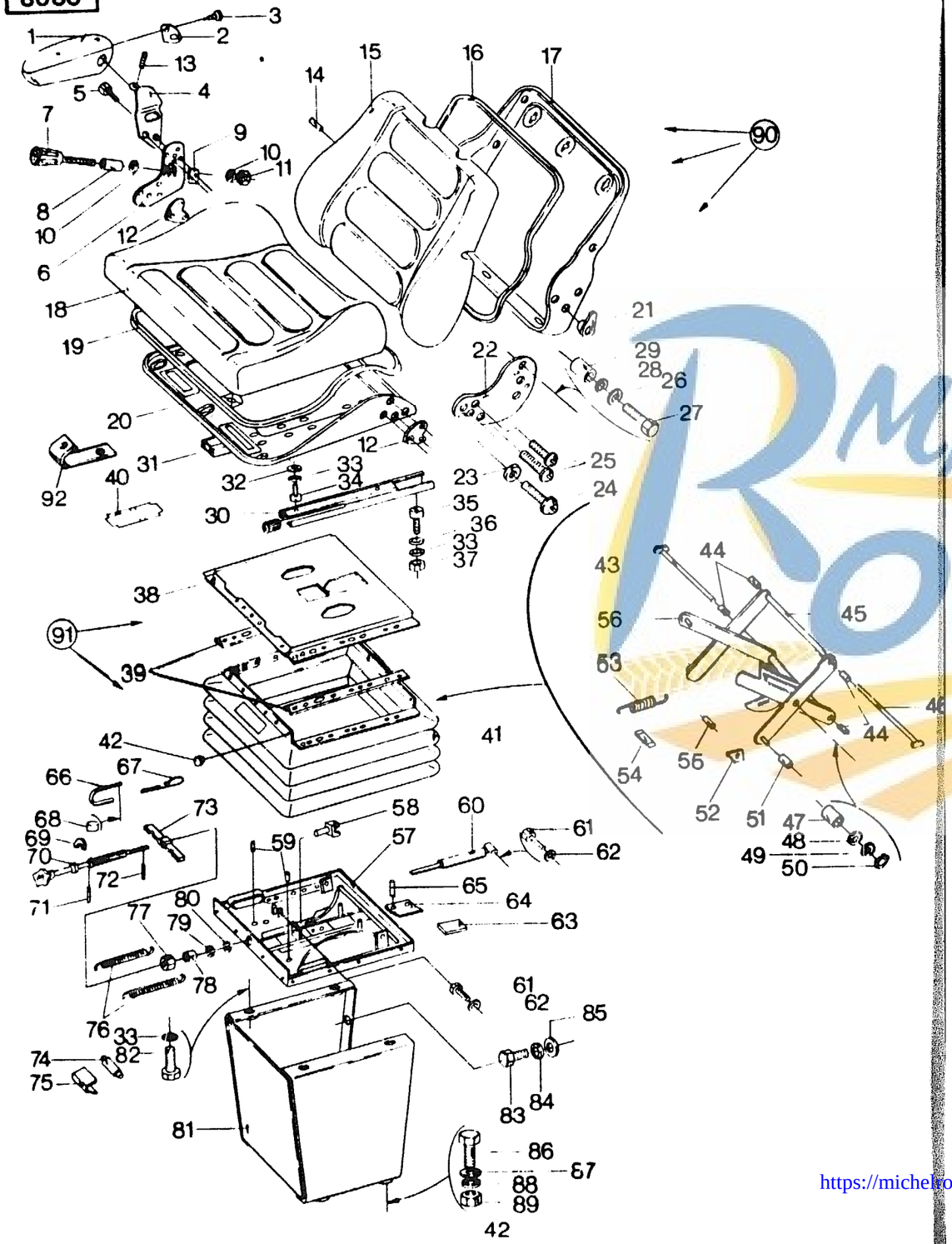

OPERATOR'S SEAT
SIEGE
SITZ
SEDILE DEL CONDUCENTE
STUURZETEL

ONLY VALID FROM SERIAL No : 4227001 (8070)
4122001 (8080)

MODEL 8070 - 8080

Fig.	Order Ref.	CD	8070	8080	Code	Description	N.B
66	4486894		1		758	Indicator	
	4577316		1		55	Indicator	
	4486894			1	500	Indicator	
	4577316			1	47	Indicator	
67	4469379		1	1		Spring	
68	4469381		1	1		Plug	
69	4125193		1	1		Lock ring	
70	4469418		1		758	Knob assembly	Incl. figs. 69,71 and 72
	4577328		1		55	Knob assembly	Incl. figs. 69,71 and 72
	4469418			1	500	Knob assembly	Incl. figs. 69,71 and 72
	4577328			1	47	Knob assembly	Incl. figs. 69,71 and 72
71	4125181		1	1		Lock pin	
72	4125179		1	1		Lock pin	
73	4469420		1	1		Bracket	
74	4469367		1	1		Roll	
75	4469355		1	1		Cap	
76	4469343		2	2		Spring	
77	4125206		1	1		Hex. nut	
78	4469432		1	1		Bearing	
79	4125218		1	1		Plain washer	
80	4469406		1	1		Rubber ring	
81	4484042		1	1		Support	
82	1201039		4	4		Hex. cap screw	
83	1200998		4	4		Hex. cap screw	
84	3223570		4	4		Tooth lockwasher	
85	1400156		4	4		Plain washer	
86	1202017		4	4		Hex. cap screw	
87	3782447		4	4		Plain washer	
88	1400459		4	4		Tooth lockwasher	
89	1000160		4	4		Hex. nut	
90	4496198		1	1		Seat assembly	Incl. figs. 1 to 37 – Without operator's cab
	4496275		1	1		Seat assembly	Incl. figs. 1 to 37 – With operator's cab
91	4496186		1	1		Seat mount assy	Incl. figs. 38 to 80 except fig. 42
92	**9514319**	**0**	1		76	Bracket	

https://michelroger.be 36

Michel ROGER GROUP

13 ➧ 20

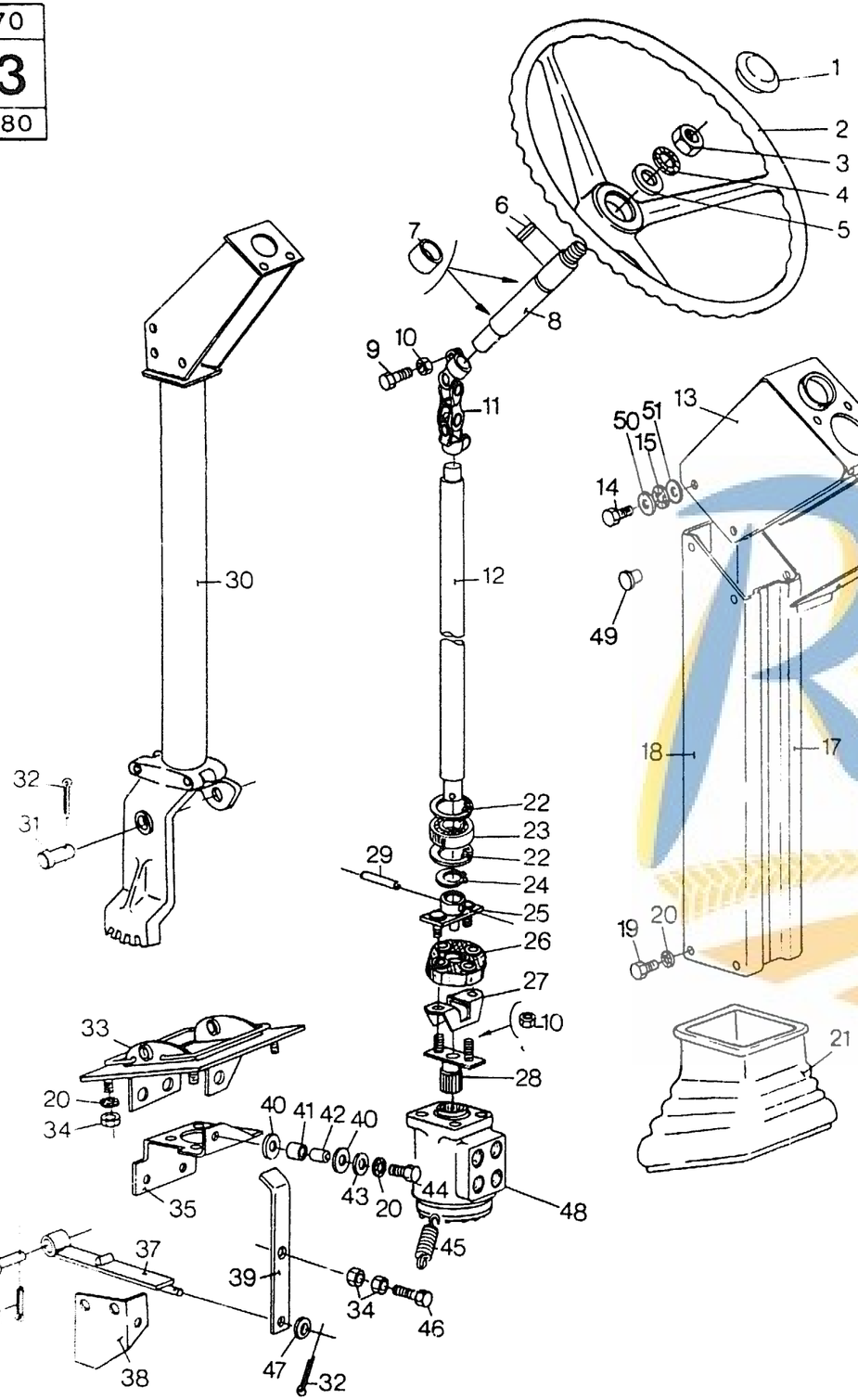

STEERING WHEEL
VOLANT
LENKRAD
VOLANTE
STUURWIEL

MODEL 8070 - 8080

Fig.	Order Ref.	CD	8070	8080	Code	Description	N.B
1	323009 4		1	1		Cap, Steering wheel	0.3
2	336125 5		1	1		Steering wheel	0.5
3	320771 6		1	1		Hex. jam nut	
4	322359 4		1	1		Lockwasher	
5	378247 3		1	1		Washer	
6	336126 7		1	1		Key	0.6
7	382975 2		3	3		Bushing	
8	428346 4		1	1		Shaft	
9	385772 5		2	2		Hex. cap screw	
10	100067 7		6	6		Hex. lock nut	
11	375804 2		1	1		Universal joint	2.0
12	428347 6		1	1		Shaft	2.0
13	432042 6		1		464	Console	
	449256 8		1		46	Console	
	432042 6			1	330	Console	
	449256 8			1	40	Console	
14	412064 8		6	6		Hex. cap screw	
15	322355 6		6	6		Tooth lockwasher	
16	430367 2		1	1		Cover	
17	430363 4		1	1		Guard, RH	
18	430364 6		1	1		Guard, LH	
19	120103 9		4	4		Hex. cap screw	
20	322358 2		15	15		Tooth lockwasher	
21	432567 8		1	1		Bellows	
22	300645 5		2	2		Circlip	
23	300313 2		1	1		Ball bearing	2.0
24	370024 3		1	1		Circlip	
25	433514 8		1	1		Coupling	
26	431485 3		1	1		Flexible coupling	
27	419637 0		1	1		Bracket	
28	433515 0		1		865	Coupling	
	433515 0			1	615	Coupling	
	9510233 4		1		75	Coupling	
	9510233 4			1	57	Coupling	
29	130046 9		1	1		Roll pin	
30	428429 0		1	1		Steering column	2.0
31	435352 6		2	2		Pivot pin	
32	130003 9		4	4		Cotter pin	
33	428351 5		1	1		Support plate	
34	100015 8		12	12		Hex. nut	
35	432632 7		1	1		Support	
36	336793 0		1	1		Pivot pin	

https://michelroger.be

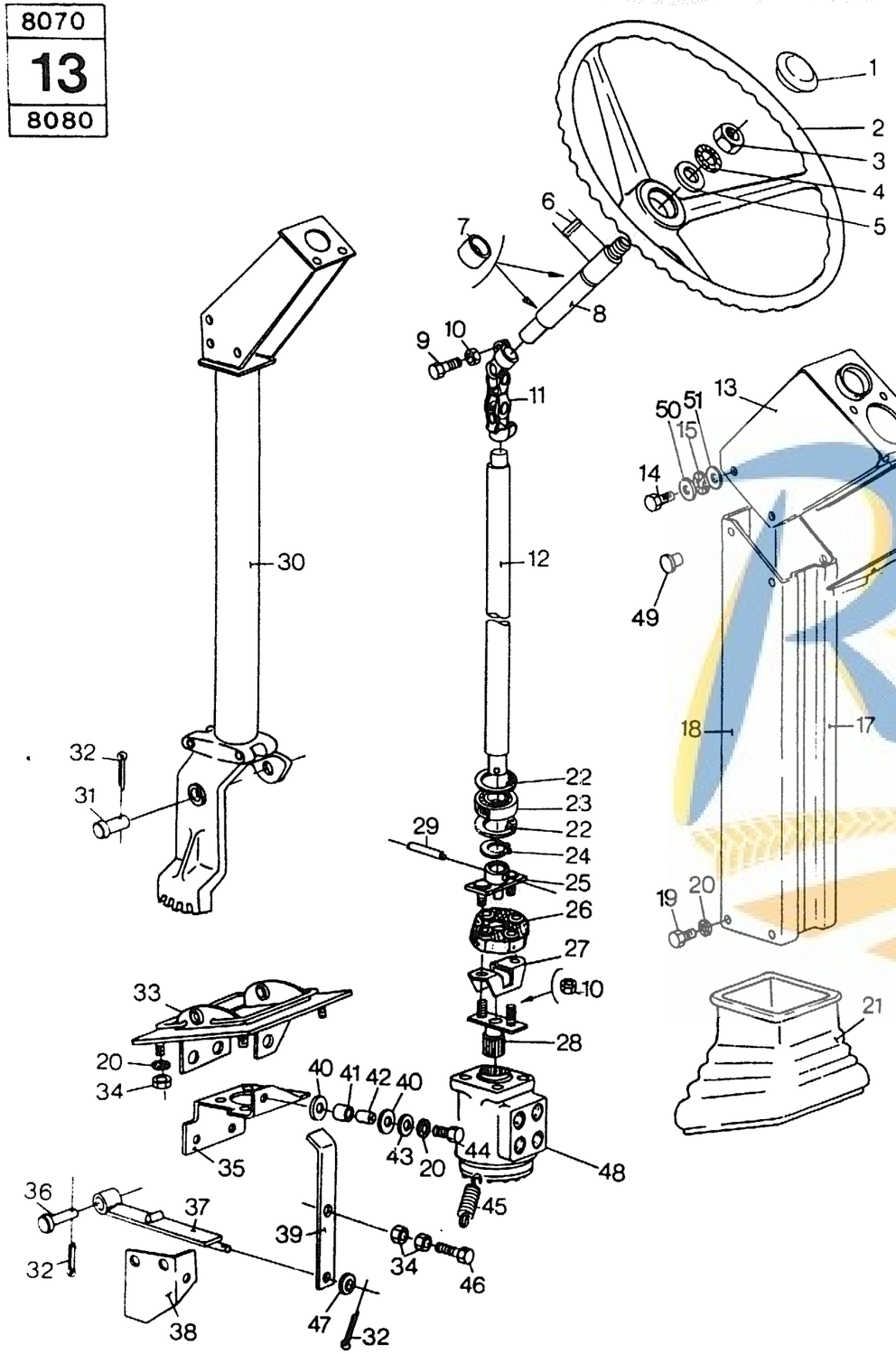

STEERING WHEEL
VOLANT
LENKRAD
VOLANTE
STUURWIEL

MODEL 8070 - 8080

Fig.	Order Ref.	CD	8070	8080	Code	Description	N.B
37	428349	0	1	1		Lock	
38	432631	5	1	1		Bracket	
39	428428	8	1	1		Lever	
40	427775	2	6	6		Rubber washer	
41	427774	0	3	3		Rubber washer	
42	428329	8	3	3		Bushing	
43	554195	6	3	3		Washer	
44	120161	1	3	3		Hex. cap screw	
45	354039	4	1	1		Spring	
46	300381	5	1	1		Hex. cap screw	
47	378243	5	5	5		Plain washer	
48	383941	2	1	1		Steering valve assy	1.4 For breakdown see group 14
49	432566	6	3	3		Plug	
50	335872	7	4	4		Plain washer	
51	140013	2	6	6		Plain washer	

https://michelroger.be 39

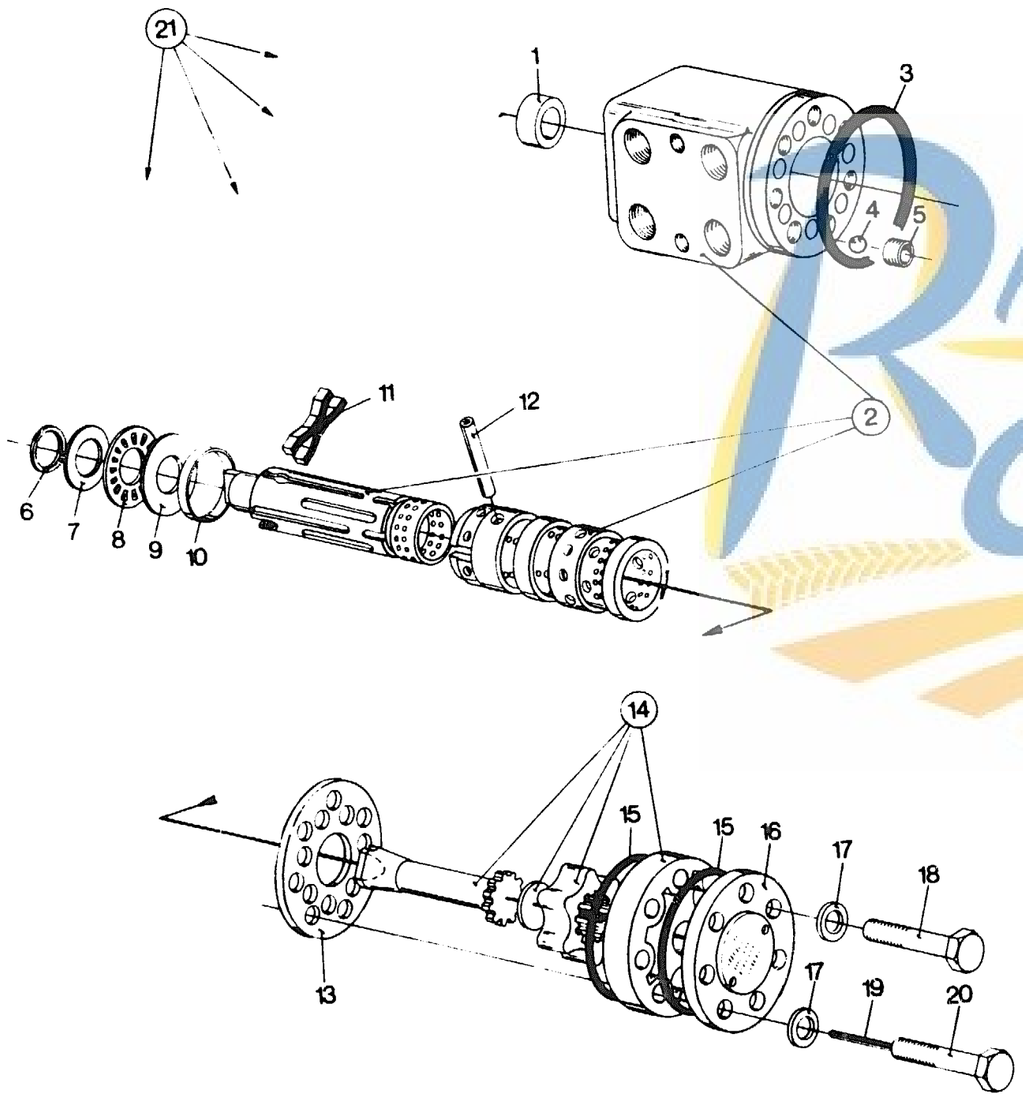

HYDROSTATIC STEERING VALVE
DISTRIBUTEUR DE DIRECTION
HYDROSTATISCHE LENKUNG
VALVOLA DISTRIBUTRICE
VERDEELKLEP

Fig.	Order Ref.	CD	8070	8080	Code	Description	N.B.
1	394855	2	1	1		Dust ring	
2	394854	0	1	1		Body & commutator assembly	2.6
3	327232	1	1	1		"O" ring	
4	326447	5	1	1		Steel ball	
5	326446	3	1	1		Set screw	2.6
6	418312	1	1	1		Seal	
7	394852	6	1		848	Thrust washer	
	394852	6		1	609	Thrust washer	
8	394851	4	1		848	Thrust bearing	
	751022	0	1		64	Thrust bearing	
	394851	4		1	609	Thrust bearing	
	751022	0		1	51	Thrust bearing	
9	394850	2	1		848	Thrust washer	
	394850	2		1	609	Thrust washer	
10	326432	4	1	1		Ring	
11	433273	6	6	6		Spring	2.6
12	394849	9	1	1		Pin	
13	326436	2	1	1		Spacer plate	
14	327323	4	1	1		Stator & orbit-set	2.6
15	326440	1	2	2		"O" ring	
16	326441	3	1	1		Cover	
17	326442	5	7	7		Washer	
18	326443	7	6	6		Hex. cap screw	
19	326444	7	1	1		Roll pin	
20	326445	1	1	1		Hex. cap screw	
21	383941	2	1	1		Valve assy, Steering	1.4

https://michelroger.be 40

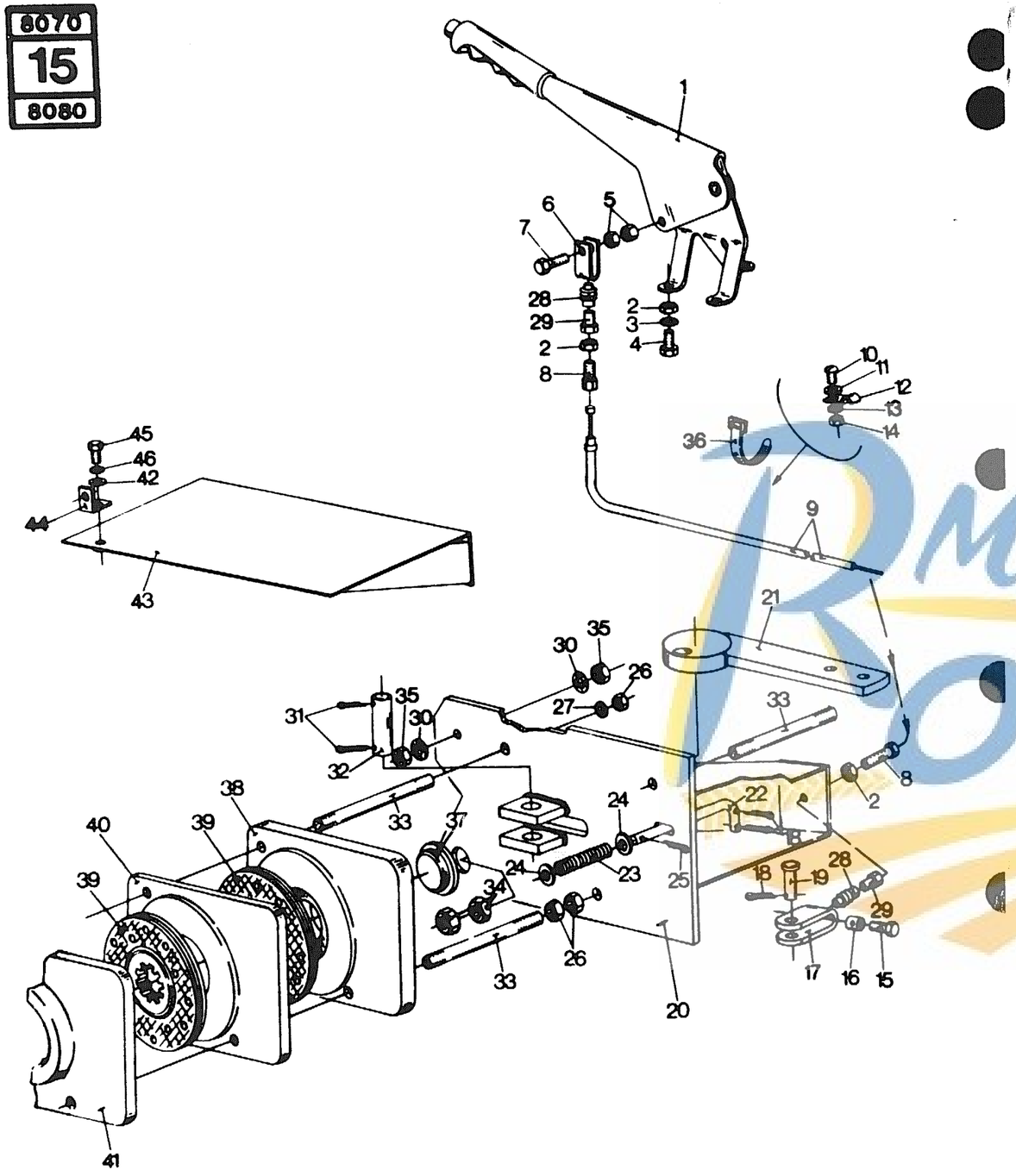

HANDBRAKE TRANSMISSION
FREIN SUR L'ARBRE DE COMMANDE
HANDBREMSE AUF ANTRIEBSWELLE
FRENO A MANO SULL'ALBERO DI COMANDO
HANDREM OP AANDRIJFAS

MODEL 8080-8070

Fig.	Order Ref.	CD	8070	8080	Code	Description	N.B
1	388341 5		1	1		Handbrake	0.9
2	100015 8		7	7		Hex. nut	
3	322358 2		3	3		Tooth lockwasher	
4	120104 1		3	3		Hex. cap screw	
5	100014 6		2	2		Hex. nut	
6	388340 3		1	1		Clevis	
7	300507 3		1	1		Hex. cap screw	
8	120194 0		2	2		Adjusting screw	1.5
9	423750 6		1	1		Brake cable	1.4
10	120007 5		3	3		Machine screw	
11	140013 2		2	2		Plain washer	
12	353147 2		2	2		Clamp	
13	322355 6		3	3		Tooth lockwasher	
14	100012 2		3	3		Hex. nut	
15	120100 3		1	1		Hex. cap screw	
16	381140 2		1	1		Cable Clamp	0.5
17	334249 5		1	1		Clevis	
18	130003 9		3	3		Cotter pin	
19	390039 8		1	1		Clevis pin	0.4
20	411547 1		1	1	865	Bracket	
	9513501 6		1		76	Bracket	
21	338073 6		1	1	865	Lever	
	9513500 4		1		76	Lever	
222	338074 8		1	1		Rod	
23	539140 2		1	1		Spring	
24	140041 1		2	2		Plain washer	
25	130006 5		1	1		Cotter pin	
26	337475 7		5	5		Hex. nut	
27	140046 1		2	2		Tooth lockwasher	
28	427705 5		2	2		Cable protection	
29	426599 7		2	2		Protection holder	
30	378245 9		2	2		Plain washer	
31	130008 9		2	2		Cotter pin	
32	390027 3		2	2		Pivot pin	
33	411515 4		3	3		Threaded rod	
34	100095 6		3	2		Hex. nut	
35	323238 9		2	2		Hex. nut	
36	323597 9		3	3		Cable strap	
37	411513 0		1	1		Thrust plate	
38	482301 6		1	1		Brake plate	
39	356723 7		2		845	Brake disc	1.0
	455914 2		2		861	Brake disc	
	751087 6		2		73	Brake disc	
	356723 7			2	519	Brake disc	
	455914 2			2	48	Brake disc	
	751087 6			2	58	Brake disc	

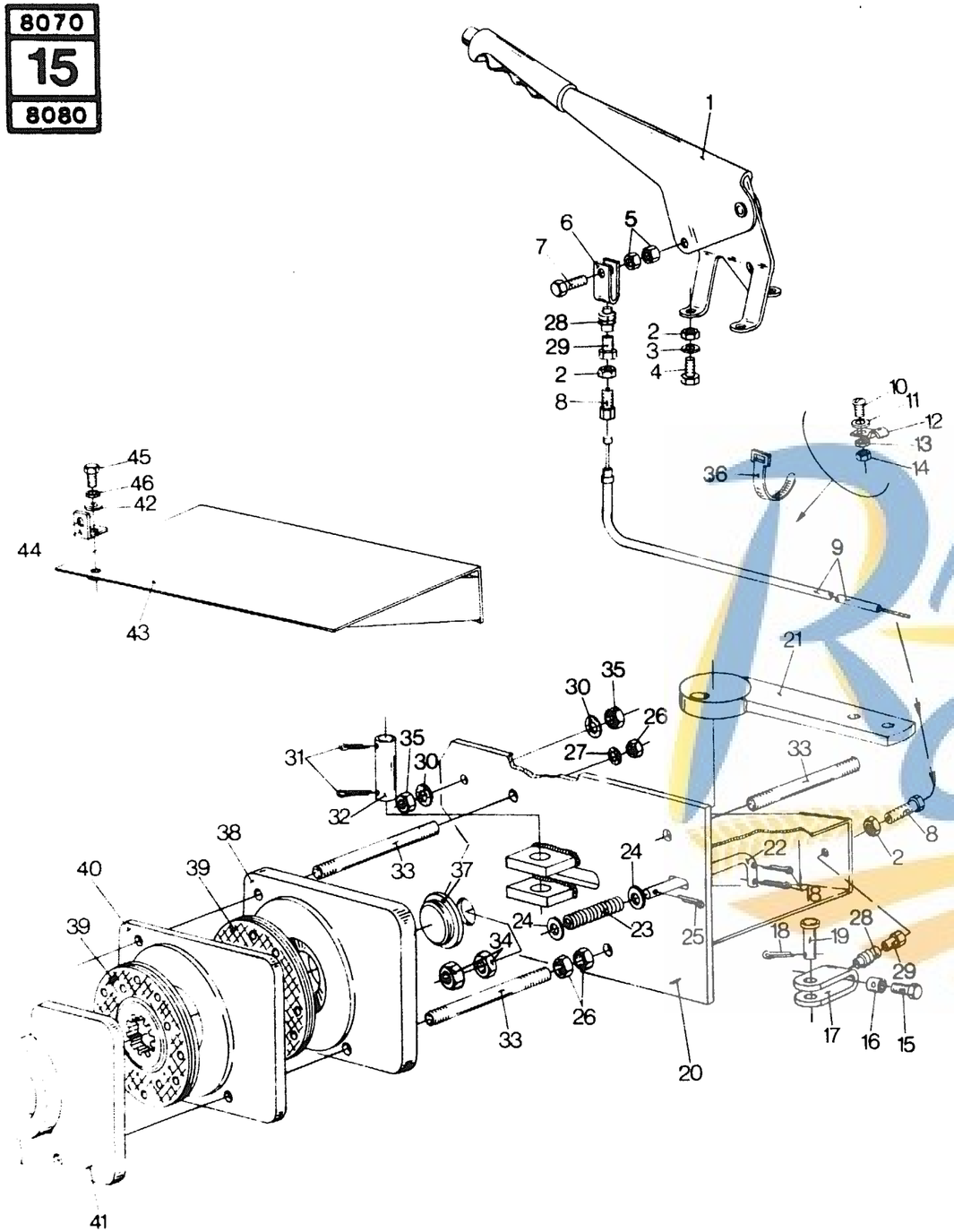

HANDBRAKE TRANSMISSION
FREIN SUR L'ARBRE DE COMMANDE
HANDBREMSE AUF ANTRIEBSWELLE
FRENO A MANO SULL'ALBERO DI COMANDO
HANDREM OP AANDRIJFAS

MODEL 8080-8070

Fig.	Order Ref.	CD	8070	8080	Code	Description	N.B
40	482300 4		1		858	Brake plate	
	751088 8		1		73	Brake plate	
	482300 4			1	619	Brake plate	
	751088 8			1	58	Brake plate	
41	410313 5		1		858	Brake plate	
	751089 0		1		73	Brake plate	
	410313 5			1	619	Brake plate	
	751089 0			1	58	Brake plate	
42	140015 6		1	1		Plain washer	
43	411797 0		1		745	Guard	
	446390 9		1		55	Guard	
	411797 0			1	491	Guard	
	446390 9			1	47	Guard	
44	411796 8		1	1		Bracket	
45	120099 6		1	1		Hex. cap screw	
46	322357 0		1	1		Tooth lockwasher	

Michel ROGER

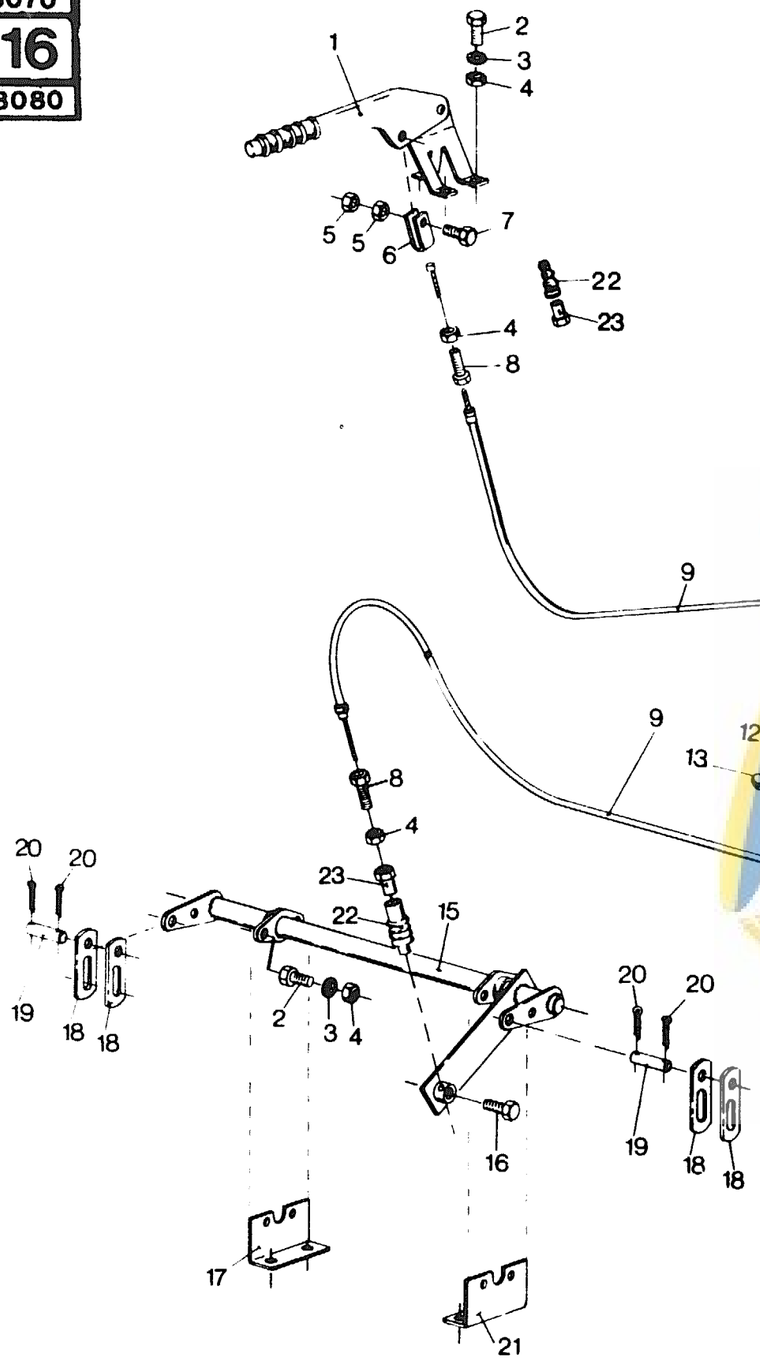

HANDBRAKE ON DIFFERENTIAL SHAFT
FREIN SUR L'ARBRE DIFFERENTIEL
HANDBREMSE AUF DIFFERENTIALWELLE
FRENO A MANO SULL'ALBERO DEL DIFFERENZIALE
HANDREM OP DIFFERENTIEELAS

MODEL 8070 - 8080

Fig.	Order Ref.	CD	8070	8080	Code	Description	N.B.
1	388341 5		1	1		Handbrake	0.9
2	120104 1		7	7		Hex. cap screw	
3	322358 2		7	7		Tooth lockwasher	
4	100015 8		11	11		Hex. nut	
5	100014 6		2	2		Hex. nut	
6	388340 3		1	1		Clevis	
7	300507 3		1	1		Hex. cap screw	
8	120194 0		2	2		Adjusting screw	1.5
9	423749 3		1	1		Cable	1.4
10	100012 2		2	2		Hex. nut	
11	322355 6		2	2		Tooth lockwasher	
12	353147 2		2	2		Clamp	
13	120007 5		2	2		Machine screw	
14	323597 9		1	1		Cable strap	
15	430800 2			1		Lever w/a	
	388293 2		1			Lever w/a	
16	120099 8		1	1		Hex. cap screw	
17	430888 6			1		Support	
	397451 9		1			Support	
18	334247 1		4	4		Link	
19	390015 8		2	2		Pivot pin	
20	130003 9		4	4		Cotter pin	
21	430889 8			1		Support	
	397452 1		1			Support	
22	427705 5		1	1		Cable protection	
23	426599 7		2	2		Protection holder	

https://michelroger.be 43

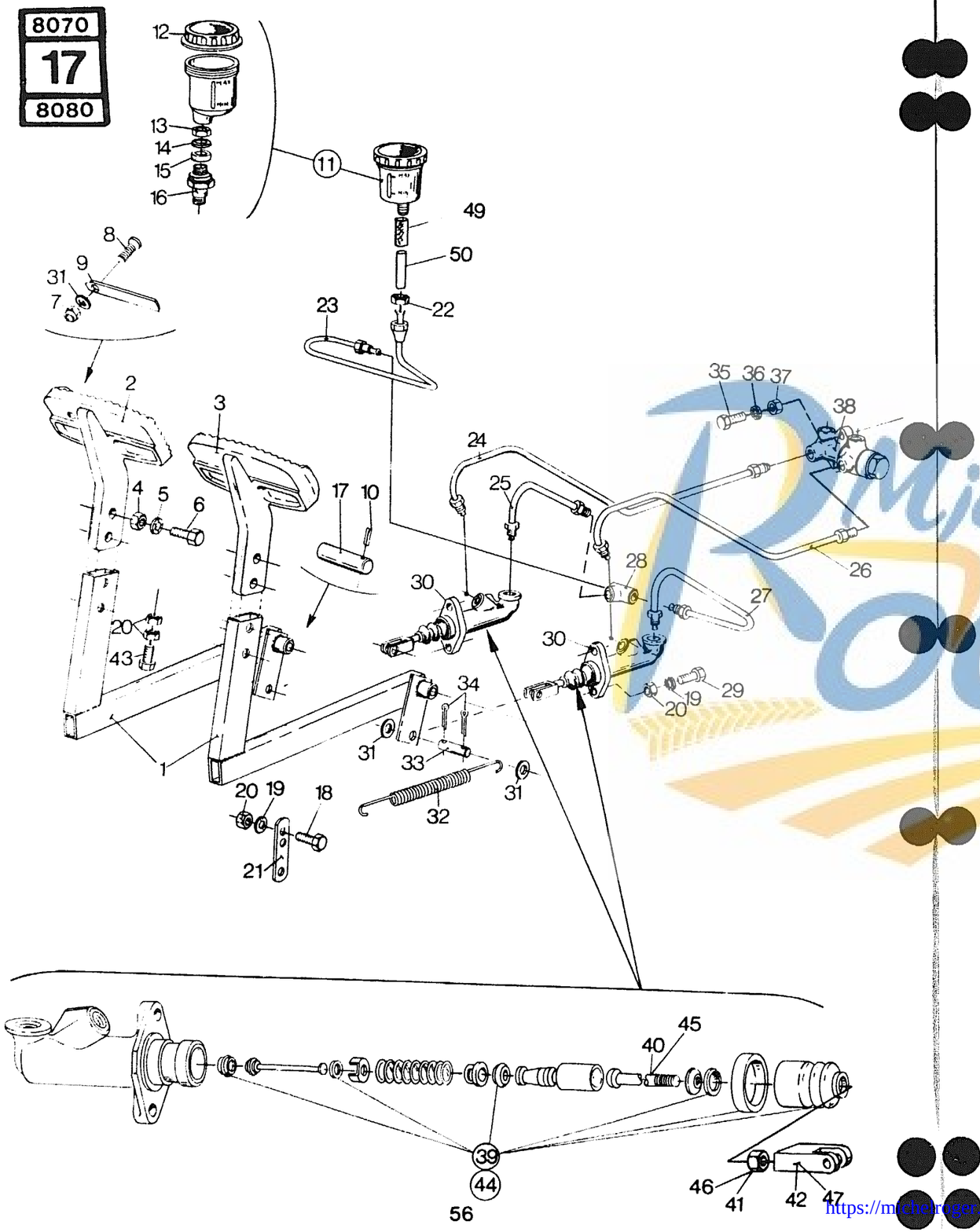

PEDALS AND CIRCUIT FOR HYDRAULIC BRAKES
PEDALES ET CIRCUIT DU FREIN HYDRAULIQUE
PEDALE UND KREISLAUF FÜR HYDR. BREMSEN
PEDALI E CIRCUITO IDRAULICO
PEDALEN EN CIRCUIT VOOR HYDRAULISCHE REM

MODEL 8070 - 8080

Fig.	Order Ref.	CD	8070	8080	Code	Description		N.B.
1	423848 3		2	2		Foot pedal		
2	417279 8		1	1		Pedal block, RH		
3	417280 1		1	1		Pedal block, LH		
4	354720 9		4	4		Hex. jam nut		
5	140045 9		4	4		Tooth lockwasher		
6	120111 6		4	4		Hex. cap screw		
7	100067 7		1	1		Hex. lock nut		
8	300351 2		1	1		Mach. screw, flat head		
9	426815 7		1	1		Interlocking arm		
10	130045 7		1	2		Roll pin		
11	336723 3		1	1		Reservoir assy, Brake fluid	0.7	Incl. figs. 12 to 16
12	359498 1		1	1		Cover	0.3	
13	087308 1		1	1		Hex. nut		
14	140077 6		1	1		Washer		
15	359500 8		1	1		Seal washer		
16	359499 3		1	1		Connector fitting		
17	419716 8		2	2		Pivot pin		
18	120104 5		10	10		Hex. cap screw		
19	322358 2		14	14		Tooth lockwasher		
20	100015 8		18	18		Hex. nut		
21	420831 5		1		345	Spring anchor		
	429623 3		1		42	Spring anchor		
	420831 5			1	326	Spring anchor		
	429623 3			1	36	Spring anchor		
22	087891 6		1	1		Hex. nut		
23	432588 2			1	609	Hydraulic pipe		
	754422 1			1	51	Hydraulic pipe		
	394958 0		1		352	Hydraulic pipe		
	754422 1		1		65	Hydraulic pipe		
24	394962 9			1		Hydraulic pipe		
			1			Hydraulic pipe		
25	394959 2		1	1		Hydraulic pipe		
26	394961 7		1	1		Hydraulic pipe		
27	394960 5		1	1		Hydraulic pipe		
28	336724 5		1	1		T-fitting	0.7	
29	120105 3		4	4		Hex. cap screw		
30	336728 3		2	2		Brake cylinder assy (Master)	0.8	Girling - Incl. figs. 39 to 42
						Brake cylinder assy (Master)		Tavisa - Incl. figs. 43 to 47
31	378243 5		4	4		Plain washer		

https://michelroger.be 44

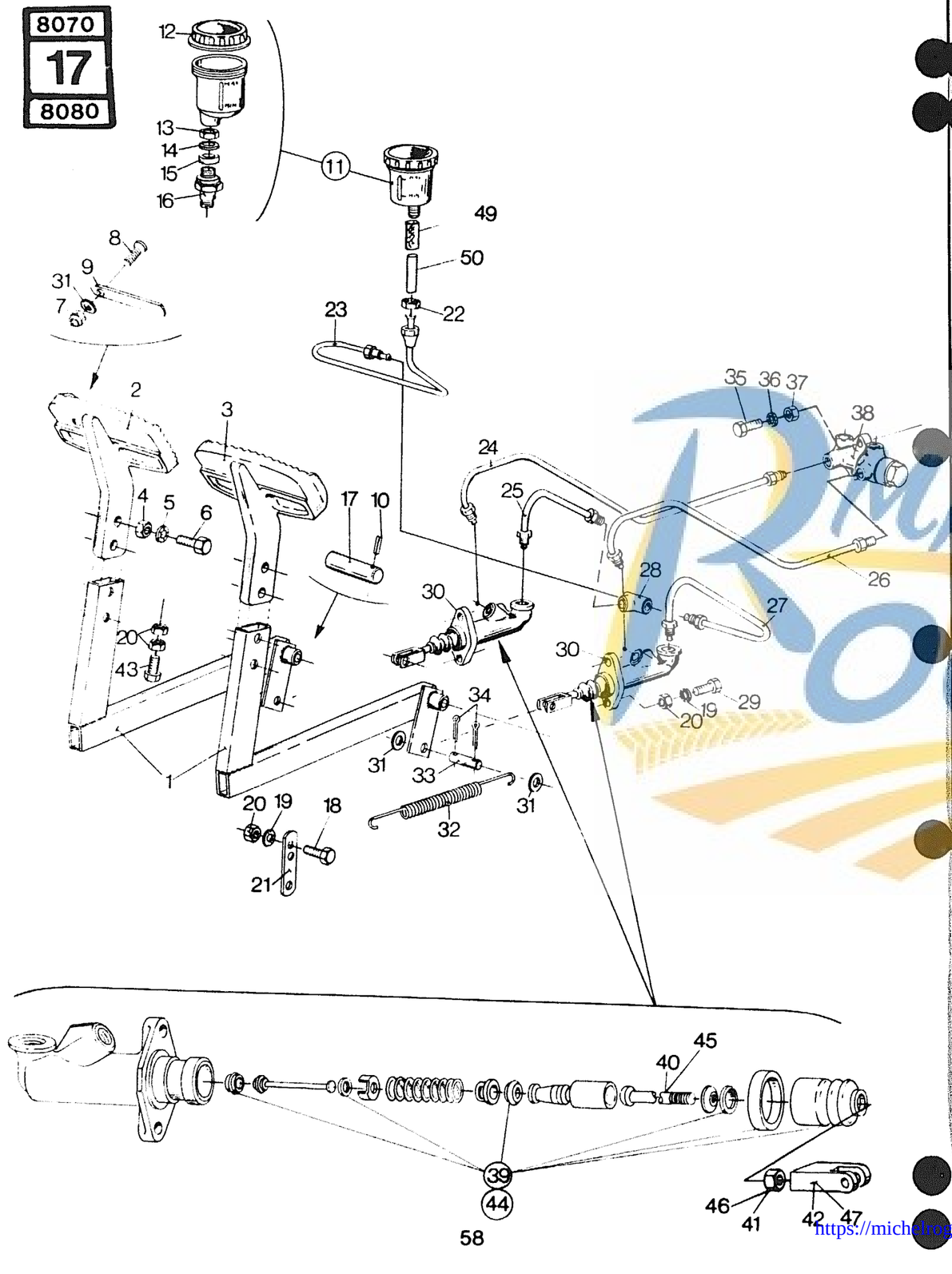

PEDALS AND CIRCUIT FOR HYDRAULIC BRAKES
PEDALES ET CIRCUIT DU FREIN HYDRAULIQUE
PEDALE UND KREISLAUF FÜR HYDR. BREMSEN
PEDALI E CIRCUITO IDRAULICO
PEDALEN EN CIRCUIT VOOR HYDRAULISCHE REM

MODEL 8070 - 8080

Fig.	Order Ref.	CD	8070	8080	Code	Description		N.B.
32	180035 6		1		345	Spring		
	432027 4		1		42	Spring		
	180035 6			1	326	Spring		
	432027 4			1	36	Spring		
33	390014 6		2	2		Pivot pin	0.5	
34	130002 7		8	8		Cotter pin		
35	300507 3		2	2		Hex. cap screw		
36	322357 0		8	8		Tooth lockwasher		
37	100014 6		4	4		Hex. nut		
38	367923 4		1	1		Compensating valve	1.1	Girling
						Compensating valve		Tavisa (Villar)
39	397349 2		1	1		Seal kit	1.7	Girling
40	359495 5		2	2		Rod		Girling
41	087307 9		2	2		Hex. nut		Girling
42	359497 9		2	2		Clevis		Girling
43	300381 5		2	2		Hex. cap screw		
44	437767 7		2	2		Seal kit		Tavisa (Villar)
45	437764 1		2	2		Rod		Tavisa (Villar)
46	437765 3		2	2		Hex. nut		Tavisa (Villar)
47	437766 5		2	2		Clevis		Tavisa (Villar)
48	428004 0		1			Support		
49	913888 0			1	51	Clamp, Hydraulic pipe		
	913888 0		1		65	Clamp, Hydraulic pipe		
50	410970 7			1	51	Hose		
	410970 7		1		65	Hose		

https://michelroger.be

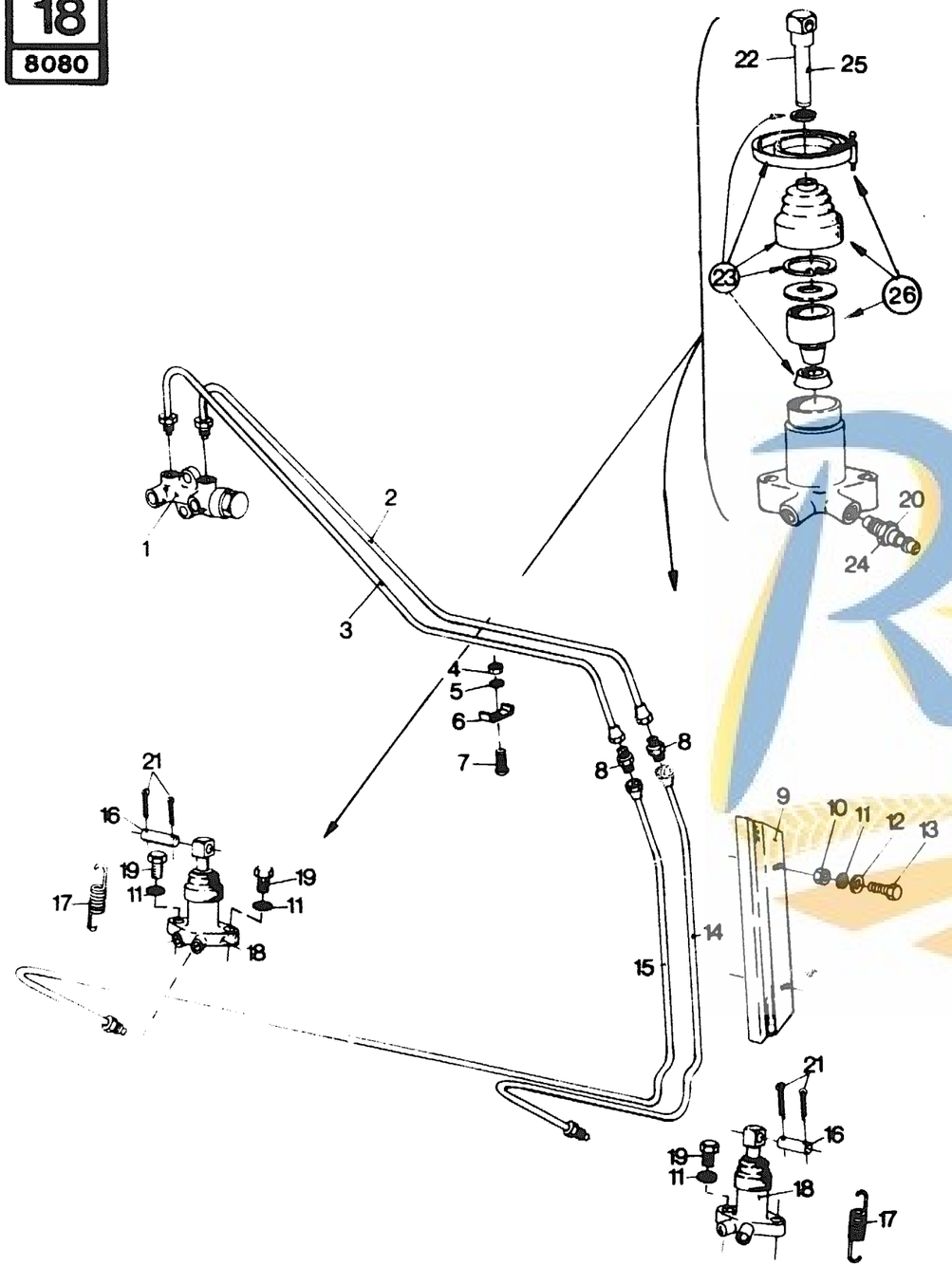

CIRCUIT FOR HYDRAULIC BRAKES
CIRCUIT DU FREIN HYDRAULIQUE
KREISLAUF FÜR HYDR. BREMSEN
CIRCUITO IDRAULICO
CIRCUIT VOOR HYDR. REM

MODEL 8070 - 8080

Fig.	Order Ref.	CD	8070	8080	Code	Description		N.B.
1	367923	4	1	1		Compensating valve	1.0	
2	394964	3	1	1		Hydraulic pipe		
3	394963	1	1	1		Hydraulic pipe		
4	100012	2	2	2		Hex. nut		
5	322355	6	2	2		Tooth lockwasher		
6	336760	1	2	2		Clamp		
7	120007	5	2	2		Machine screw		
8	336722	1	2	2		Connector fitting, straight	0.4	
9	394148	3	1	1		Plate	1.0	
10	100014	6	2	2		Hex. nut		
11	322357	0	2	2		Tooth lockwasher		
12	140015	6	2	2		Plain washer		
13	120100	3	2	2		Hex. cap screw		
14	432589	4	1	1		Hydraulic pipe	1.1	
15	432590	7	1	1		Hydraulic pipe		
16	336745	9	2	2		Pivot pin		
17	445371	8	2	2		Spring	0.5	
18	431112	4	2	2		Brake cylinder (Slave)	1.0	Girling - Incl.figs.22,23 and 20
						Brake cylinder (Slave)	1.0	Tavisa (Villar) - Incl.figs.24,25 and 26
19	300507	3	4	4		Hex. cap screw		
20	433191	2	2	2		Bleed screw		Girling
21	130002	7	8	8		Cotter pin		
22	433190	0	2	2		Rod		Girling
23	433192	4	2	2		Seal kit	1.7	Girling
24	437769	1	2	2		Bleed screw		Tavisa (Villar)
25	437768	9	2	2		Rod		Tavisa (Villar)
26	437771	6	2	2		Seal kit		Tavisa (Villar)

https://michelroger.be

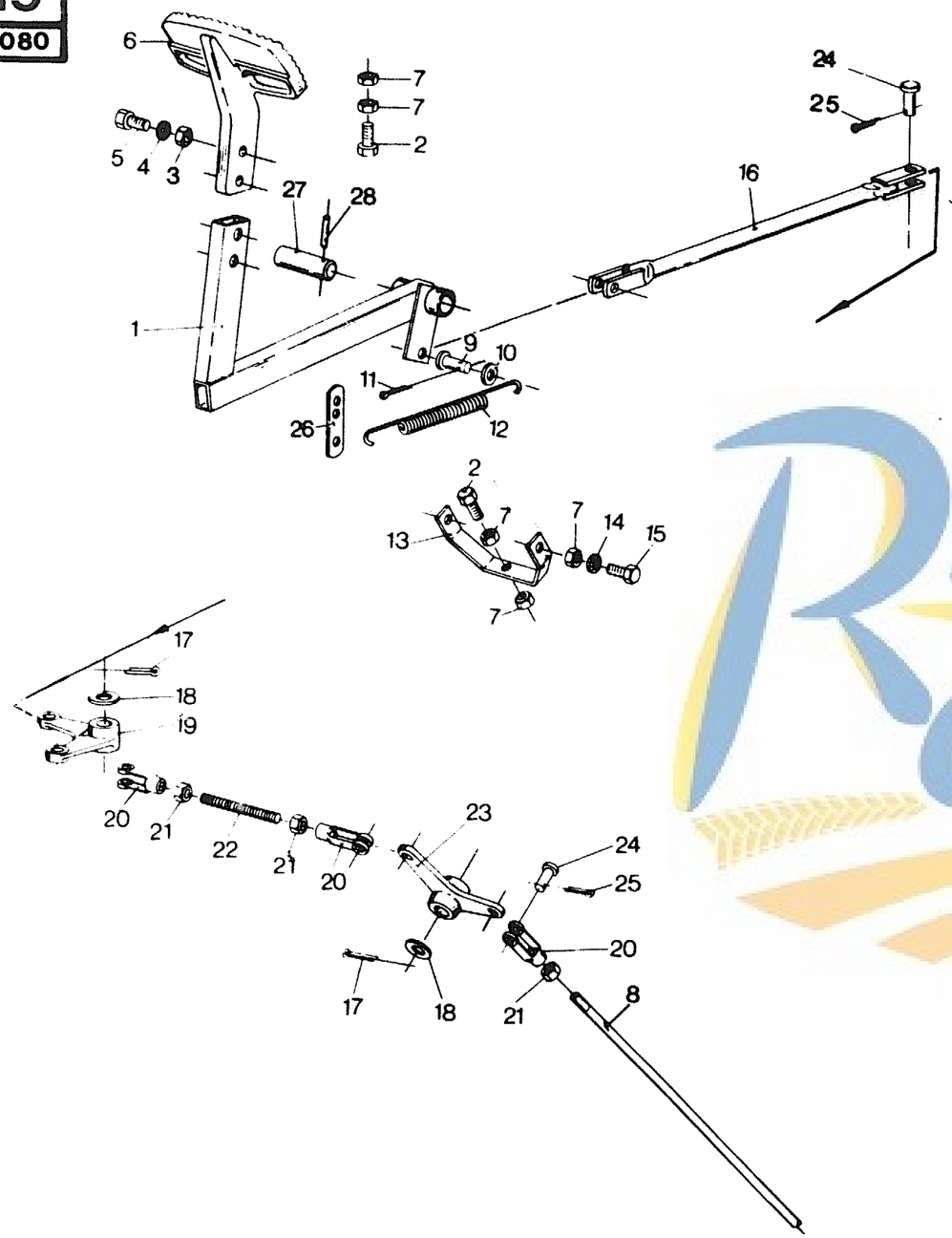

CLUTCH PEDAL AND LINKAGE
PEDALE DE DEBRAYAGE ET TRINGLERIE
KUPPLUNGSPEDAL UND GESTÄNGE
PEDALE E TIRANTERIA
ONTKOPPELING EN STANGENSTELSEL

MODEL 8070 - 8080

Fig.	Order Ref.	CD	8070	8080	Code	Description	N.B.
1	423849 5			1	325	Pedal lever	
	445405 1			1	35	Pedal lever	
	423849 5		1		344	Pedal lever	
	445405 1		1		41	Pedal lever	
2	120106 5		2	2		Hex. cap screw	
3	354720 9		2	2		Hex. jam nut	
4	140045 9		2	2		Tooth lockwasher	
5	120111 6		2	2		Hex. cap screw	
6	417280 1		1	1		Foot pedal	
7	100015 8		10	10		Hex. nut	
8	388907 5		1	1		Threaded rod	
9	412414 1		1	1		Clevis pin	
10	331162 8		1	1		Washer	
11	130002 7		1	1		Cotter pin	
12	180035 6		1		345	Spring	
	445371 8		1		42	Spring	
	180035 6			1	326	Spring	
	445371 8			1	36	Spring	
13	393806 8		1	1		Support	0.5
14	322358 2		6	6		Tooth lockwasher	
15	120104 1		6	6		Hex. cap screw	
16	388904 9		1	1		Connecting rod	
17	130008 9		2	2		Cotter pin	
18	456510 7		2	2		Washer	
19	393043 0		1	1		Pivot lever	
20	340075 4		3	3		Clevis	
21	100016 0		3	3		Hex. nut	
22	110040 3		1	1		Threaded rod	
23	309227 6		1	1		Pivot lever	
24	390040 1		4	4		Clevis pin	0.4
25	130003 9		4	4		Cotter pin	
26	420831 5		1		345	Spring anchor	
	429623 3		1		42	Spring anchor	
	420831 5			1	326	Spring anchor	
	429623 3			1	36	Spring anchor	
27	419716 8		1	1		Pivot pin	
28	130045 7		1	1		Roll pin	

https://michelroger.be 47

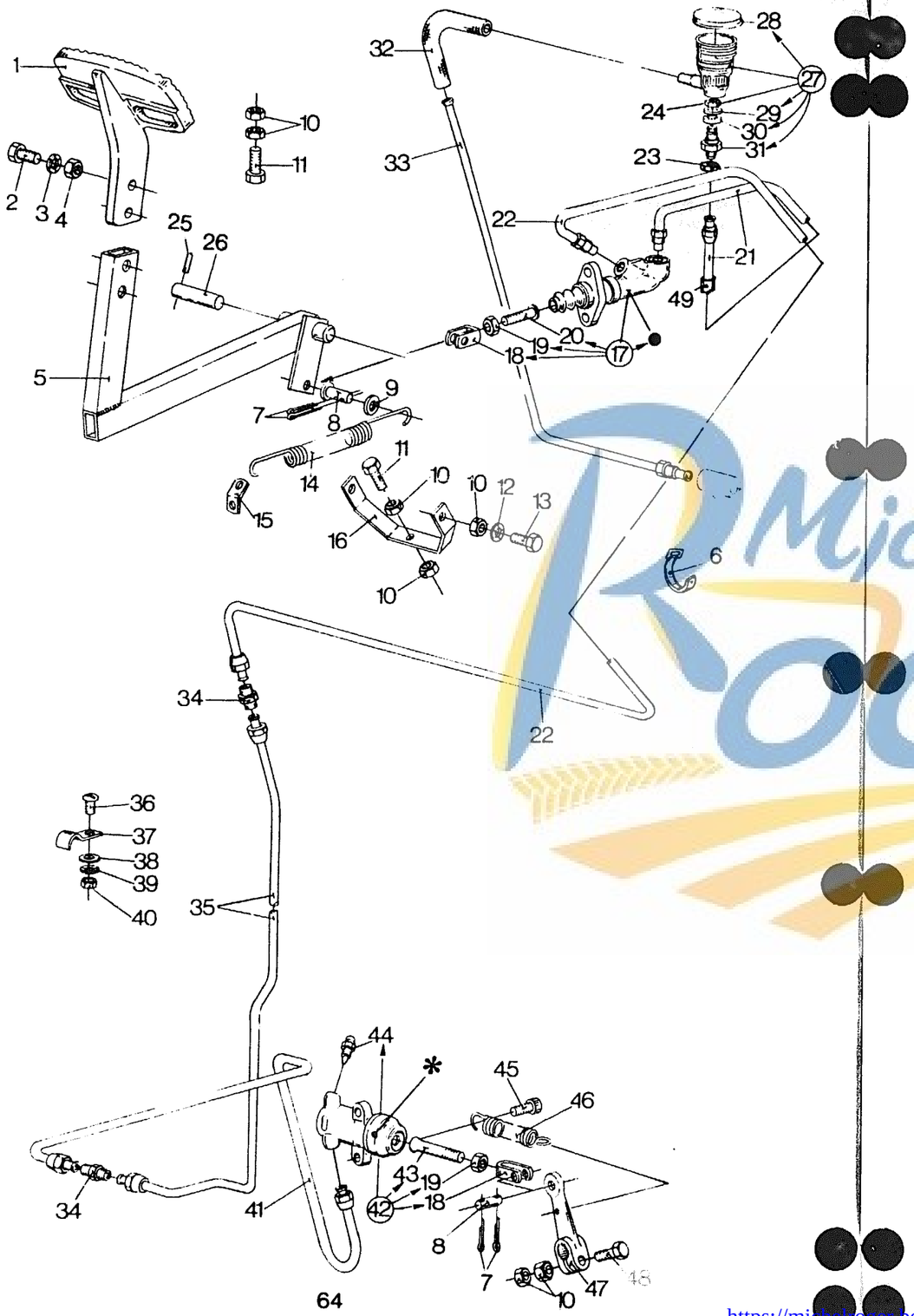

CLUTCH PEDAL AND HYDRAULIC CIRCUIT
PEDALE DE DEBRAYAGE ET CIRCUIT HYDRAULIQUE
KUPPLUNGSPEDAL UND HYDRAULISCHER KREISLAUF
PEDALE DELLA FRIZIONE E CIRCUITO IDRAULICO
ONTKOPPELINGSPEDAAL EN HYDRAULISCH CIRCUIT

MECHANICAL DRIVE

MODEL 8070 - 8080

Fig.	Order Ref.	CD	8070	8080	Code	Description		N.B.
1	417280	1	1	1		Foot pedal		
2	120111	6	1	1		Hex.cap screw		
3	140045	9	2	2		Tooth lockwasher		
4	354720	9	2	2		Hex. jam nut		
5	423849	5	1		344	Pedal lever		
	445405	1	1		41	Pedal lever		
	423849	5		1	325	Pedal lever		
	445405	1		1	35	Pedal lever		
6	323597	9	1	1		Cable strap		
7	130002	7	4	4		Cotter pin		
8	390014	6	1	1		Clevis pin	0.5	
9	378243	5	1	1		Plain washer		
10	100015	8	10	10		Hex. nut		
11	300381	5	2	2		Hex. cap screw		
12	322358	2	6	6		Tooth lockwasher		
13	120104	1	6	6		Hex. cap screw		
14	432027	4		1		Spring	0.5	
	180035	6	1			Spring		
15	432026	2		1		Spring anchor		
	420831	5	1			Spring anchor		
16	393806	8	1	1		Spring anchor		
17	356353	2	1			Brake cylinder assy (Master)	0.8	Incl.figs.18,19, 20 and ●
	396929	1		1		Brake cylinder assy (Master)		
18	359497	9	1	1		Clevis		
19	087307	9	1	1		Hex. nut		
20	359495	5	1	1		Threaded rod		
21	432592	1	1		848	Hydraulic pipe		
	432592	1		1	609	Hydraulic pipe		
22	444920	2	1	1		Hydraulic pipe		
23	087891	6	1	1		Hex. nut		
24	417985	5	1	1		Hex. jam nut		
25	130045	7	1	1		Roll pin		
26	419716	8	1	1		Pivot pin		
27	432343	4	1		848	Reservoir assy, Brake fluid		Incl.figs. 24,28,29,30 and 31
	432343	4		1	609	Reservoir assy, Brake fluid		Incl.figs. 24,28,29,30 and 31
	446470	1	1		64	Reservoir assy, Brake fluid		
	446471	1		1	51	Reservoir assy, Brake fluid		

https://michelroger.be

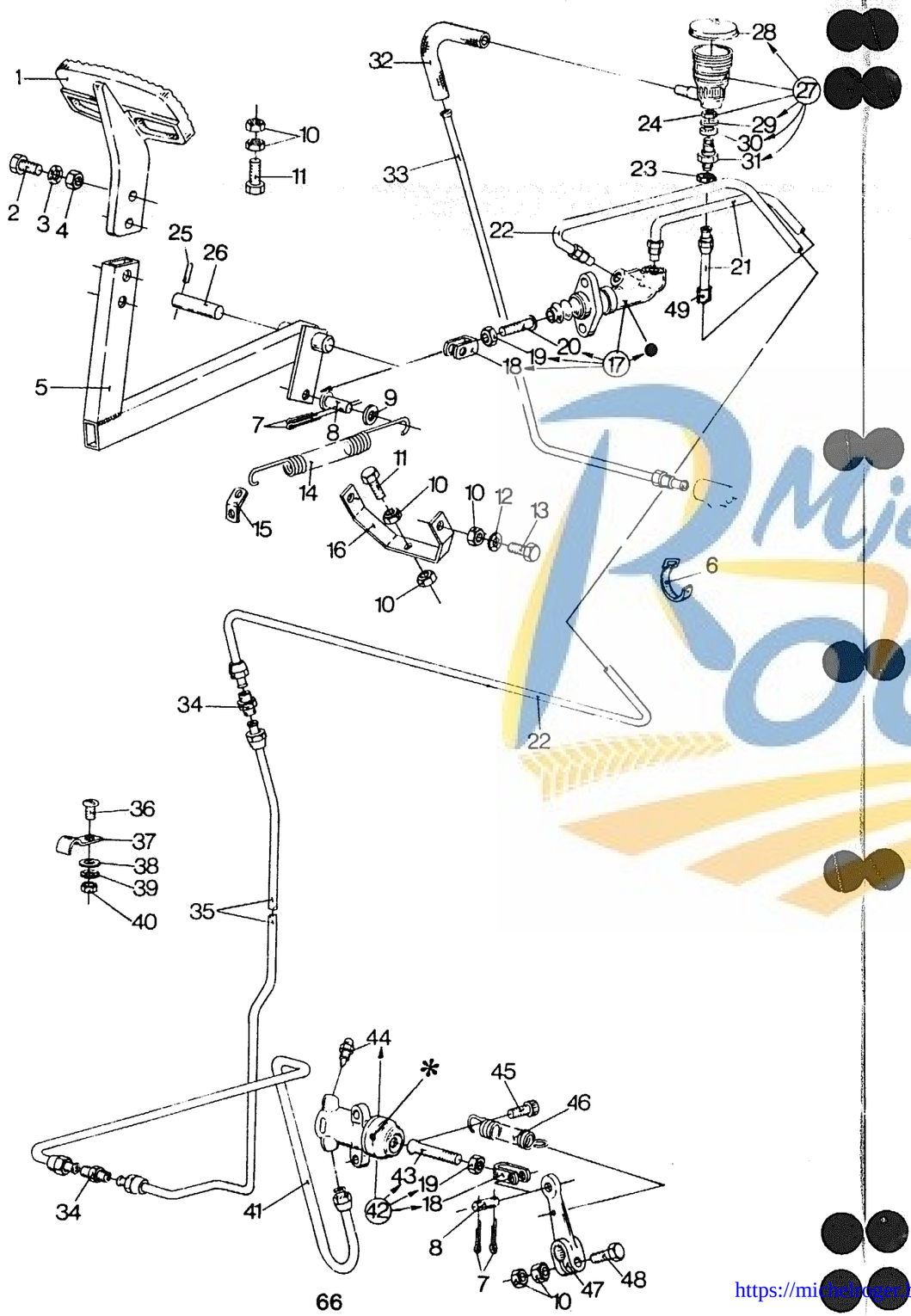

66

CLUTCH PEDAL AND HYDRAULIC CIRCUIT
PEDALE DE DEBRAYAGE ET CIRCUIT HYDRAULIQUE
KUPPLUNGSPEDAL UND HYDRAULISCHER KREISLAUF
PEDALE DELLA FRIZIONE E CIRCUITO IDRAULICO
ONTKOPPELINGSPEDAAL EN HYDRAULISCH CIRCUIT

MECHANICAL DRIVE

MODEL 8070 - 8080

Fig.	Order Ref.	CD	8070	8080	Code	Description	N.B.
28	359498	1	1	1		Cover	
29	140018	2	1	1		Plain washer	
30	417986	7	1	1		Seal washer	
31	433225	5	1	1		Connector	
32	410970	7	1	1		Rubber pipe	
33	432591	9	1		848	Hydraulic pipe	
	432591	9		1	609	Hydraulic pipe	
34	336722	1	2	2		Connector fitting, straight	
35	444921	4	1	1		Hydraulic pipe 1.0	
36	120007	5	4	4		Machine screw	
37	412089	0	1	1		Clamp	
38	140014	4	1	1		Plain washer	
39	322355	6	1	1		Tooth lockwasher	
40	100012	2	1	1		Hex. nut	
41	444922	6	1	1		Hydraulic pipe	
42	396930	4	1	1		Brake cylinder assy (Slave) 0.8 Incl.figs. 18,19,43,44 and *	
43	418012	5	1	1		Threaded rod	
44	418013	7	1	1		Bleed screw	
45	120052	0	1	1		Screw	
46	442353	7	1	1		Spring	
47	398650	2	1			Lever	
48	120107	7	1			Hex. cap screw	
●	359494	3		1		Seal kit	
	418011	3	1			Seal kit	
*	422201	2	1	1		Seal kit	
49	754529	7	1		64	Hydraulic pipe	
	754529	7		1	51	Hydraulic pipe	

https://michelroger.be

Michel
GROUP
ROGER

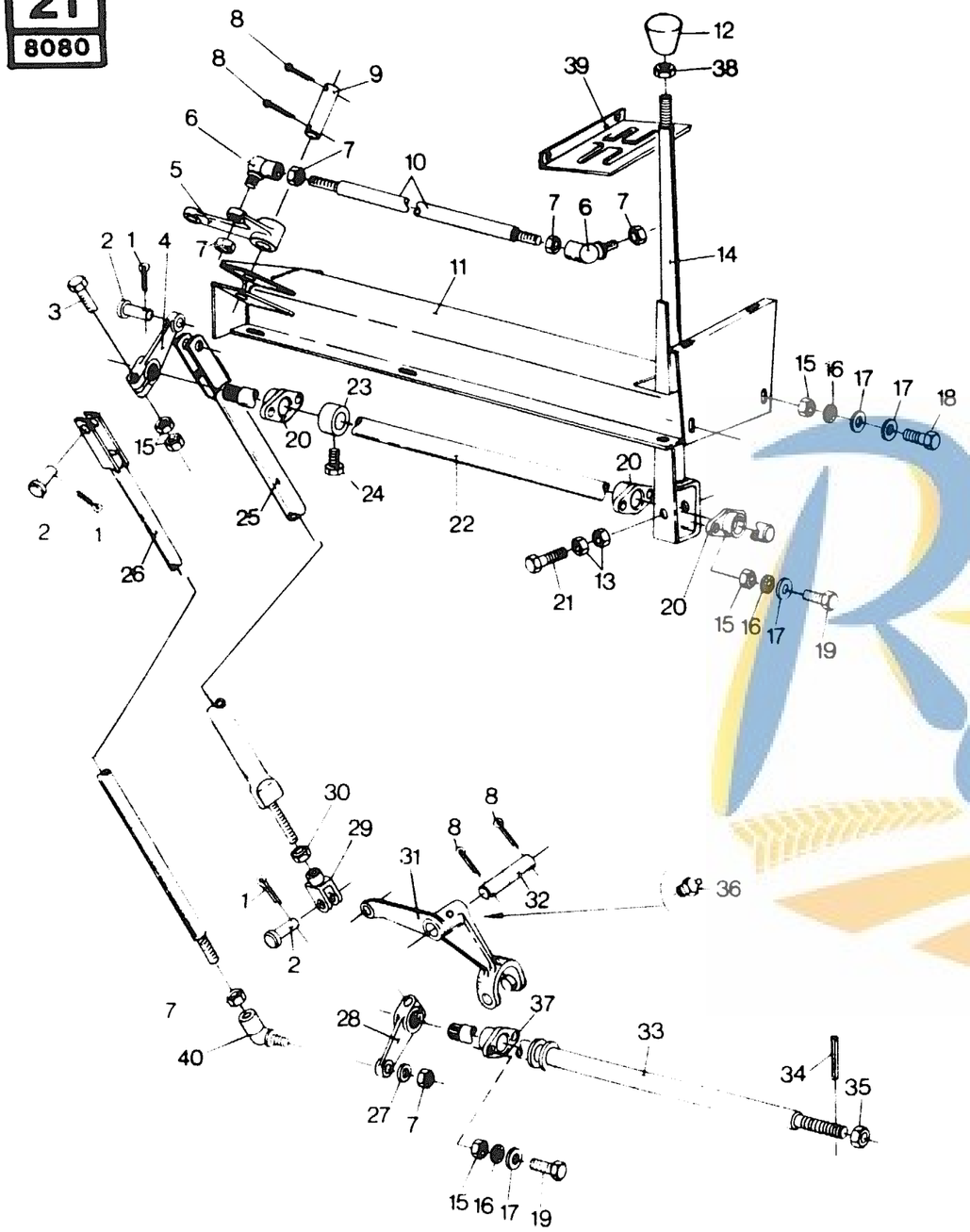

GEAR SHIFT LEVER AND RODS
CHANGEMENT DE VITESSE ET TRINGLERIE
GANGSCHALTHEBEL UND GESTÄNGE
LEVA DI COMANDO CAMBIO DELLE MARCE E BIELLISMO DI COMANDO
GANGWISSELHEFBOOM EN STANGENSTELSEL

MODEL 8070 - 8080

Fig.	Order Ref.	CD	8070	8080	Code	Description		N.B.
1	130003	9	3	3		Cotter pin		
2	322901	5	3	3		Clevis pin		
3	120107	7	2	2		Hex. cap screw		
4	396504	1	1	1		Pivot lever	0.4	Hydrostatic drive
	368090	8	1	1		Lever		Mechanical drive
5	392928	5	1	1		Pivot lever		
6	389152	5	3	3		Ball hinge	0.5	
7	100064	1	3	3		Hex. nut		
8	130011	6	4	4		Cotter pin		
9	390062	7	1	1		Pivot pin		
10	392985	5		1		Connecting rod		
	394240	9	1			Connecting rod		
11	432628	8		1		Support		
	432629	0	1			Support		
12	433614	0	1	1		Knob		Hydrostatic drive
	433615	2	1	1		Knob		Mechanical drive
13	323238	9	2	2		Hex. jam nut		
14	389150	1	1	1		Lever w/a		
15	100015	8	20	20		Hex. nut		
16	322358	2	16	16		Tooth lockwasher		
17	378243	5	20	20		Washer		
18	120104	1	8	8		Hex. cap screw		
19	120161	1	8	8		Hex. cap screw		
20	445728	5	4	4		Flange bearing		
21	300809	3	1	1		Hex. cap screw		
22	389159	9		1		Shaft		
	394238	4	1			Shaft		
23	300024	9	1	1		Collar		
24	300383	9	1	1		Hex. cap screw		
25	392981	7	1	1		Tie rod		
26	392983	1	1	1		Tie rod		
27	378246	1	1	1		Washer		
28	389163	8	1	1		Lever		
29	373678	1		1	325	Clevis		
	412417	7		1	35	Clevis		
	373678	1	1			Clevis		
30	100016	0	1	1		Hex. nut		
31	394145	7	1	1		Pivot lever		
32	320677	6	1	1		Pivot pin		
33	394147	1		1		Shaft		
	394236	0	1			Shaft		
34	130046	9	1	1		Roll pin		
35	100020	9	1	1		Hex. nut		

https://michelroger.be

8070
21
8080

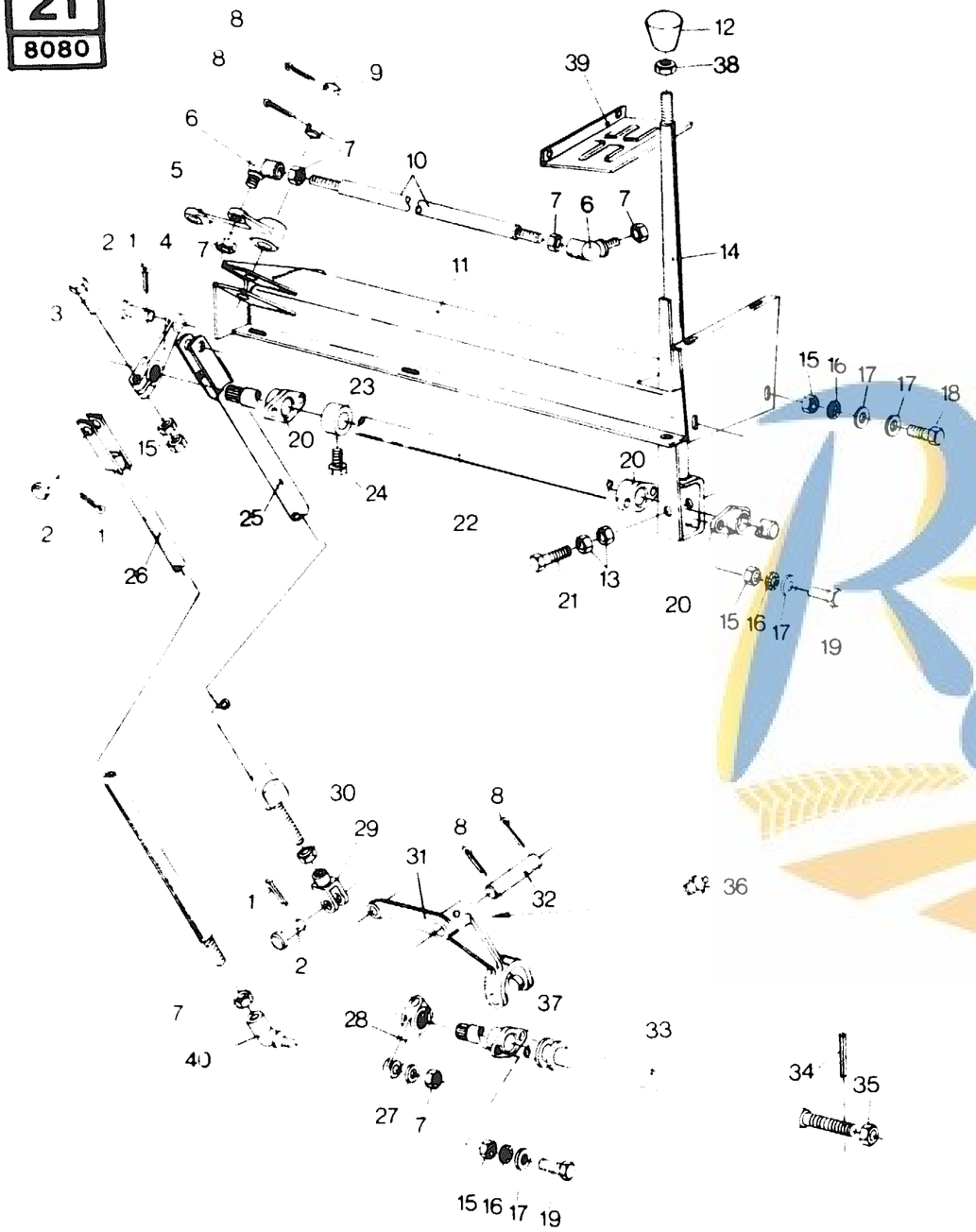

GEAR SHIFT LEVER AND RODS
CHANGEMENT DE VITESSE ET TRINGLERIE
GANGSCHALTHEBEL UND GESTÄNGE
LEVA DI COMANDO CAMBIO DELLE MARCE E BIELLISMO DI COMANDO
GANGWISSELHEFBOOM EN STANGENSTELSEL

MODEL 8070 - 8080

Fig.	Order Ref.	CD	8070	8080	Code	Description	N.B.
36	321204 6		1	1		Grease fitting	
37	445728 5		1	1		Bearing flange	
38	337475 7		1	1		Hex. nut	
39	432596 9		1	1		Plate	Mechanical drive
40	389152 5		1		438	Ball hinge	
	412210 9		1		45	Ball hinge	
	389152 5			1	329	Ball hinge	
	412210 9			1	39	Ball hinge	

Michel ROGER

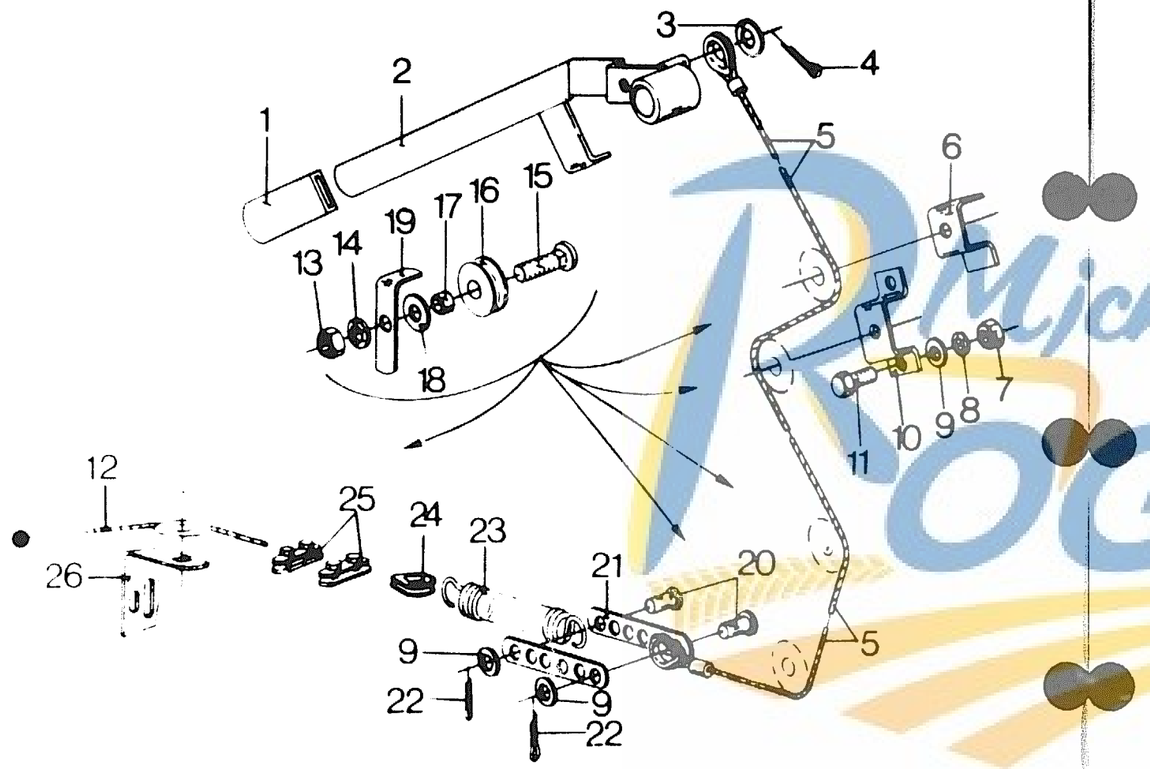

HEADER REVERSING MECHANISM LEVER AND LINKAGE
COMMANDE DE L'ENTRAINEMENT INVERSEUR DE LA PLATE-FORME DE COUPE
BEDIENUNG DES REVERSIERSYSTEMS DES SCHNEIDWERKES
COMANDO DEL SISTEMA INVERTITORE DELLA PIATTAFORMA DI TAGLIO
BEDIENING OMKEERMECHANISME VOOR MAAIBORD

MODEL 8070 - 8080

Fig.	Order Ref.	CD	8070	8080	Code	Description	N.B.
1	332809	1	1	1		Hand grip	0.3
2	395176	3	1	1		Lever	
3	378244	7	12	12		Washer	
4	130003	9	2	2		Cotter pin	
5	374818	0	1	1		Cable	1.1
6	420858	1	1	1		Bracket	
7	100015	8	12	12		Hex. nut	
8	322358	2	12	12		Tooth lockwasher	
9	378243	5	10	10		Plain washer	
10	395273	9	1	1		Bracket	
11	120104	1	4	4		Hex. cap screw	
12	418836	1	1	1		Cable	
13	100016	0	22	22		Hex. nut	
14	140045	9	20	20		Tooth lockwasher	
15	374892	6	8	8		Carriage bolt	
16	382898	8	5	5		Cable wheel	
17	382897	6	5	5		Bushing	
18	140042	3	5	5		Washer	
19	424583	2	5	5		Guide	
20	374834	4	2	2		Pin	
21	374819	2	2	2		Adjusting link	
22	130002	7	2	2		Cotter pin	
23	395153	5	1	1		Spring	0.5
24	420633	5	1	1		Cable eye	
25	418837	3	2	2		Cable clamp	
26	420859	3	1	1		Bracket	

https://michelroger.be 53

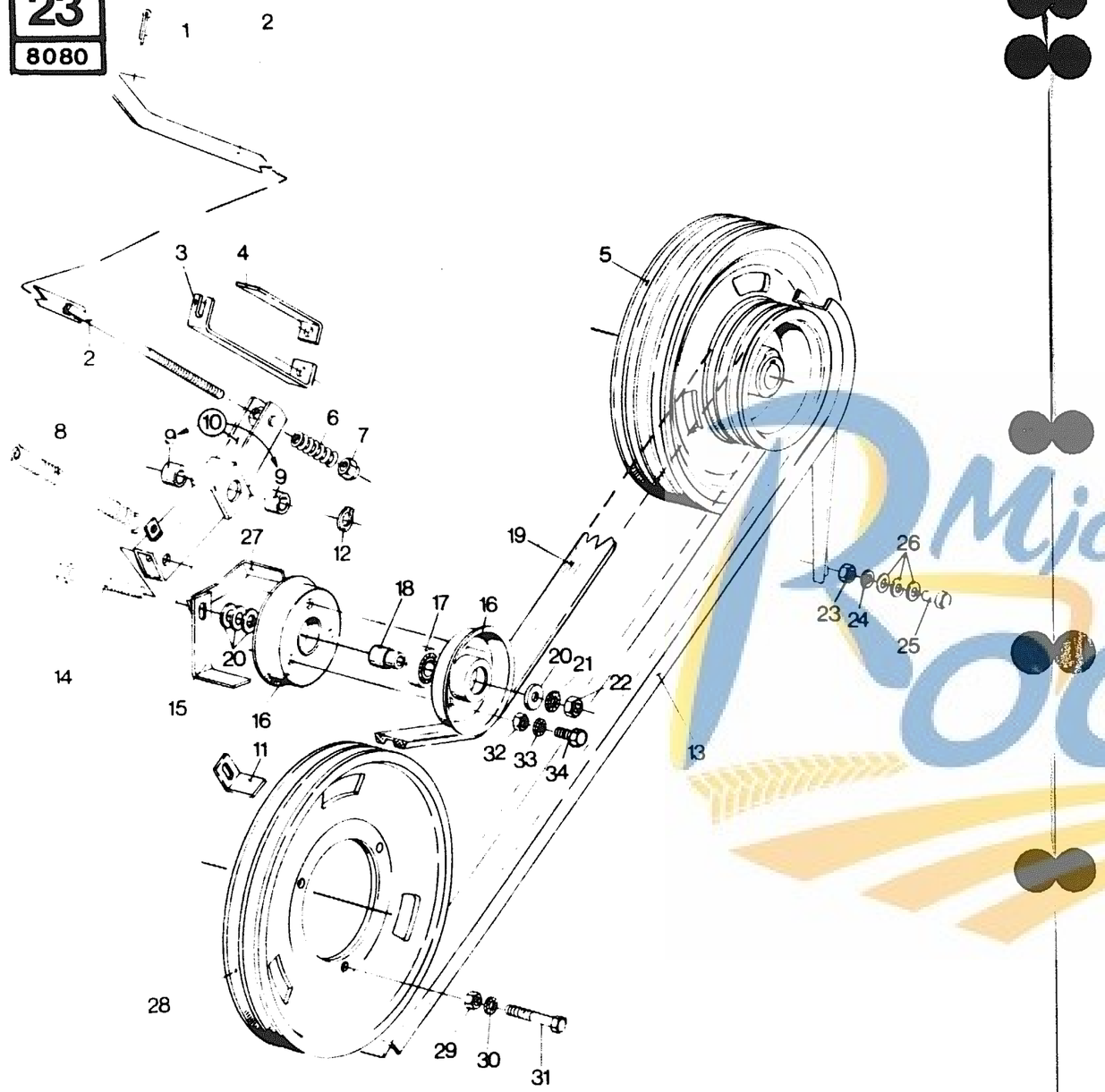

HEADER DRIVE ENGAGING MECHANISM
LEVIER D'ACCOUPLEMENT POUR TABLIER
SCHALTHEBEL FÜR PLATTFORMWANNE
INTERRUTORE DELLA PIATTAFORMA DI TAGLIO
MAAIBORDSCHAKELAAR

MODEL 8080-8070

Fig.	Order Ref.	CD	8070	8080	Code	Description		N.B
1	130003 7		1	1		Cotter pin		
2	425192 4		1	1		Connecting rod		
3	394266 3		1	1		Support		
4	393374 1		1	1		Indicator plate		
5	387949 2		1	1		Pulley	4.1	
6	180020 5		1	1		Spring		
7	412126 0		1	1		Hex. lock nut		
8	391151 7		1	1		Tension spring	0.4	
9	382975 2		2	2		Bushing	0.5	
10	425191 2		1	1		Arm		Incl.fig.9
11	423669 3		1	1		Support		
12	370002 7		1	1		Circlip		
13	420376 9		1	1		Belt guide	0.5	
14	374889 9		1	1		Hex. cap screw		
15	426792 7		1		862	Belt guide		
	438201 0		1		67	Belt guide		
	426792 7			1	621	Belt guide		
	438201 0			1	52	Belt guide		
16	426717 9		2	2		Belt idler half		
17	034439 5		2	2		Ball bearing	1.0	
18	200071 7		1	1		Bushing		
19	393326 0		1	1		Powerband belt	0.7	
20	378246 1		1	1		Washer		
21	140048 5		1	1		Tooth lockwasher		
22	100020 9		1	1		Hex. nut		
23	100015 8		8	8		Hex. nut		
24	322358 2		8	8		Tooth lockwasher		
25	120161 1		4	4		Hex. cap screw		
26	378243 5		16	16		Washer		
27	427315 8		1	1		Belt guide		
28	392704 1		1	1		Pulley	1.0	
29	337475 7		3	3		Hex. nut		
30	140046 1		3	3		Tooth lockwasher		
31	120083 5		3	3		Hex. cap screw		
32	100015 8		3	3		Hex. nut		
33	322358 2		3	3		Tooth lockwasher		
34	120103 9		3	3		Hex. cap screw		

https://michelroger.be

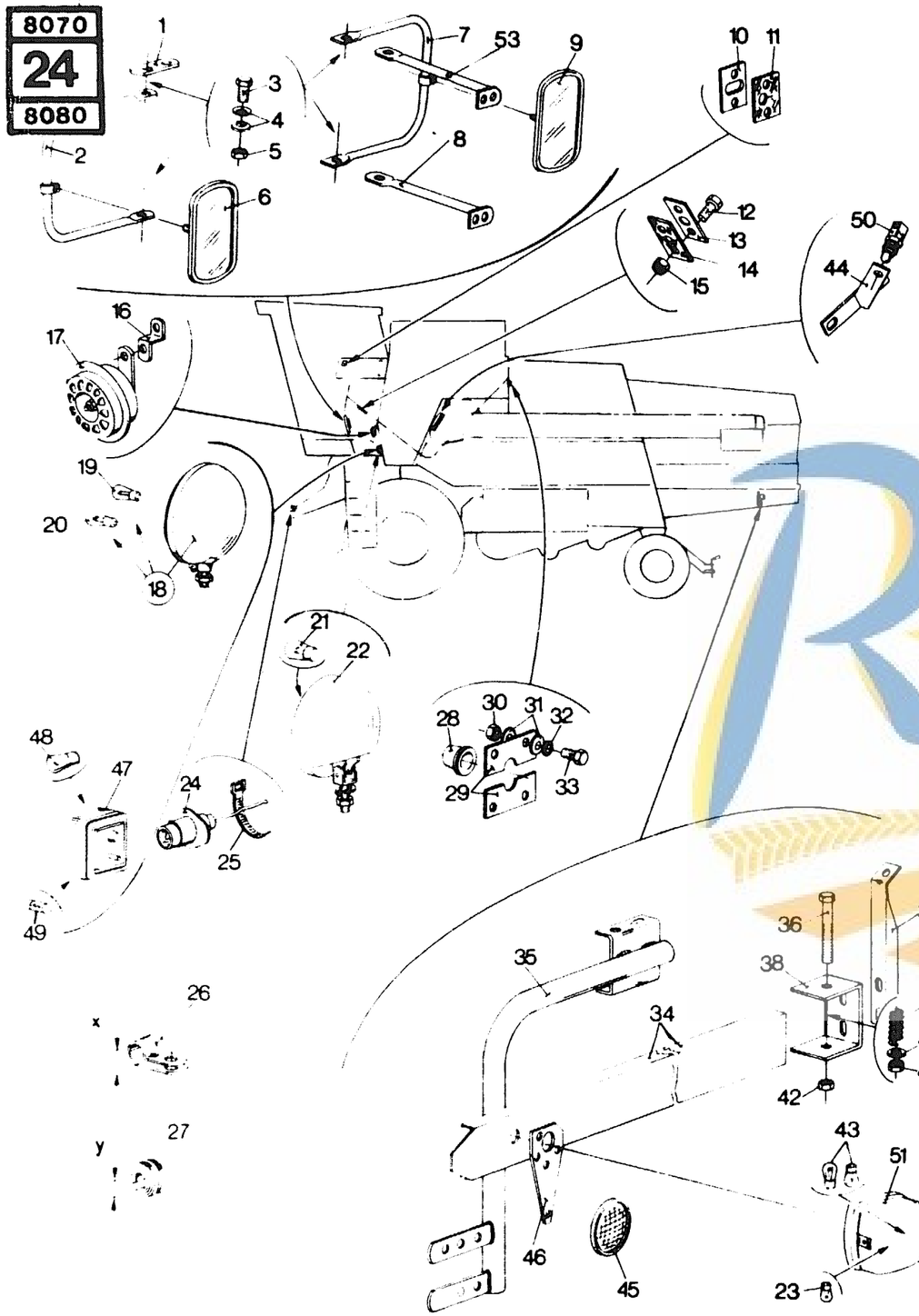

ELECTRICAL EQUIPMENT
EQUIPEMENT ELECTRIQUE
ELEKTRISCHE AUSRÜSTUNG
IMPIANTO ELETTRICO
ELEKTRISCHE UITRUSTING

MODEL 8070-8080

Fig.	Order Ref.	CD	8070	8080	Code	Description	N.B
1	398361 9		1	1		Bracket	
2	437716 0		1	1		Supporting tube	
	437717 2		1	1		Supporting tube	Germany,Switzerland & Austria only
3	120161 1		4	4		Hex. cap screw	
4	397881 0		8	8		Belleville washer	
5	100015 8		8	8		Hex. nut	
6	437650 0		1	1		Rear-view mirror	
7	437649 7		1	1		Supporting tube	
8	396791 8		1	1		Tube support	
9	437650 0		1	1		Rear-view mirror	
10	437422 7		1	1		Plate	
11	437423 9		1	1		Seal	
12	120099 8		2	2		Hex. cap screw	
13	393330 9		1		745	Plate	
	455509 3		1		55	Plate	
	393330 9			1	333	Plate	
	455509 3			1	44	Plate	
14	389779 3		1	1		Seal	
15	353308 4		2	2		Hex. lock nut	
16	419367 7		1	1		Bracket	
17	354374 4		2	2		Horn	0.5
18	305166 4		2	2		Light assy	Incl.figs.19 and 20 – UK only
19	470020 6		2	2		Bulb, 12 V 35 W, yellow	UK only
20	470013 1		2	2		Bulb	UK only
21	418865 2		2	2		Bulb, 12 V 45/40 W, white	
	418864 0		2	2		Bulb, 12 V 45/40 W, yellow	
22	418863 8		2	2		Head light assy	
23	418870 3		2	2		Bulp	
24	398225 1		1	1		Socket	
25	323597 9		AR	AR		Cable strap	L = 165 mm (6 1/2")
26	332401 7		AR	AR		Wire clamp	X = 8 mm (5/16")
	332402 9		AR	AR		Wire clamp	X = 11 mm (7/16")
	332404 3		AR	AR		Wire clamp	X = 14 mm (9/16")
	356331 6		AR	AR		Wire clamp	X = 17,5 mm (11/16")

ELECTRICAL EQUIPMENT
EUIPEMENT ELECTRIQUE
ELEKTRISCHE AUSRÜSTUNG
IMPIANTO ELETTRICO
ELEKTRISCHE UITRUSTING

Fig.	Order Ref.	CD	8070	8080	Code	Description	N.B
27	355596 5		AR	AR		Rubber grommet	Y = 9mm (11/32") wire thickness 6.5 mm (1/4")
	336152 2		AR	AR		Rubber grommet	Y = 10mm (13/32") wire thickness 2.5 mm (3/32")
	190067 5		AR	AR		Rubber grommet	Y = 11mm (7/16") wire thickness 1 mm (3/64")
	410963 2		AR	AR		Rubber grommet	Y = 16mm (5/8") wire thickness 1 mm
28	334695 0		3	3		Cable protection	
29	334732 0		2	2		Seal plate	
30	100014 6		4	4		Hex. nut	
31	140015 6		8	8		Plain washer	
32	322357 0		4	4		Tooth lockwasher	
33	120099 8		4	4		Hex. cap screw	
34	394181 3		2	2		Arm, LH	
	419143 3		1			Arm, RH	
35	410272 7		1		847	Arm, RH	Germany, Switzerland & Austria
	750186 5		1		61	Arm, RH	Germany, Switzerland & Austria
	410272 7			1	519	Arm, RH	Germany, Switzerland & Austria
	750186 5			1	48	Arm, RH	Germany, Switzerland & Austria
	410271 5		1		847	Arm, LH	Germany, Switzerland & Austria
	750187 7		1		61	Arm, LH	Germany, Switzerland & Austria
	410271 5			1	519	Arm, LH	Germany, Switzerland & Austria
	750187 7			1	48	Arm, LH	Germany, Switzerland & Austria
36	120118 0		2	2		Hex. cap screw	
37	394911 2		2	2		Support	
38	482319 3		2	2		Hinge support	
39	180021 7		2	2		Spring	0.7
40	140017 0		2	2		Plain washer	
41	100037 4		2	2		Hex. lock nut	
42	100016 0		2	2		Hex. nut	
43	398877 2		4	4		Bulb	
44	419758 6		1	1		Support	
45	470023 2		2	2		Reflector	0.3
46	397516 7		2	2		Plate	
47	418871 5		2	2		Parking light	
48	398877 2		2	2		Bulb	0.3
49	470017 9		2	2		Bulb	
50	419749 7		1	1		Switch	
51	418878 9		1	1		Rear light assy, RH	0.4
	418869 0			1		Rear light assy, LH	0.4
	422839 3		1	1		Rear light assy, LH	0.4
53	433676 0		1	1		Tube	

https://michelroger.be 56

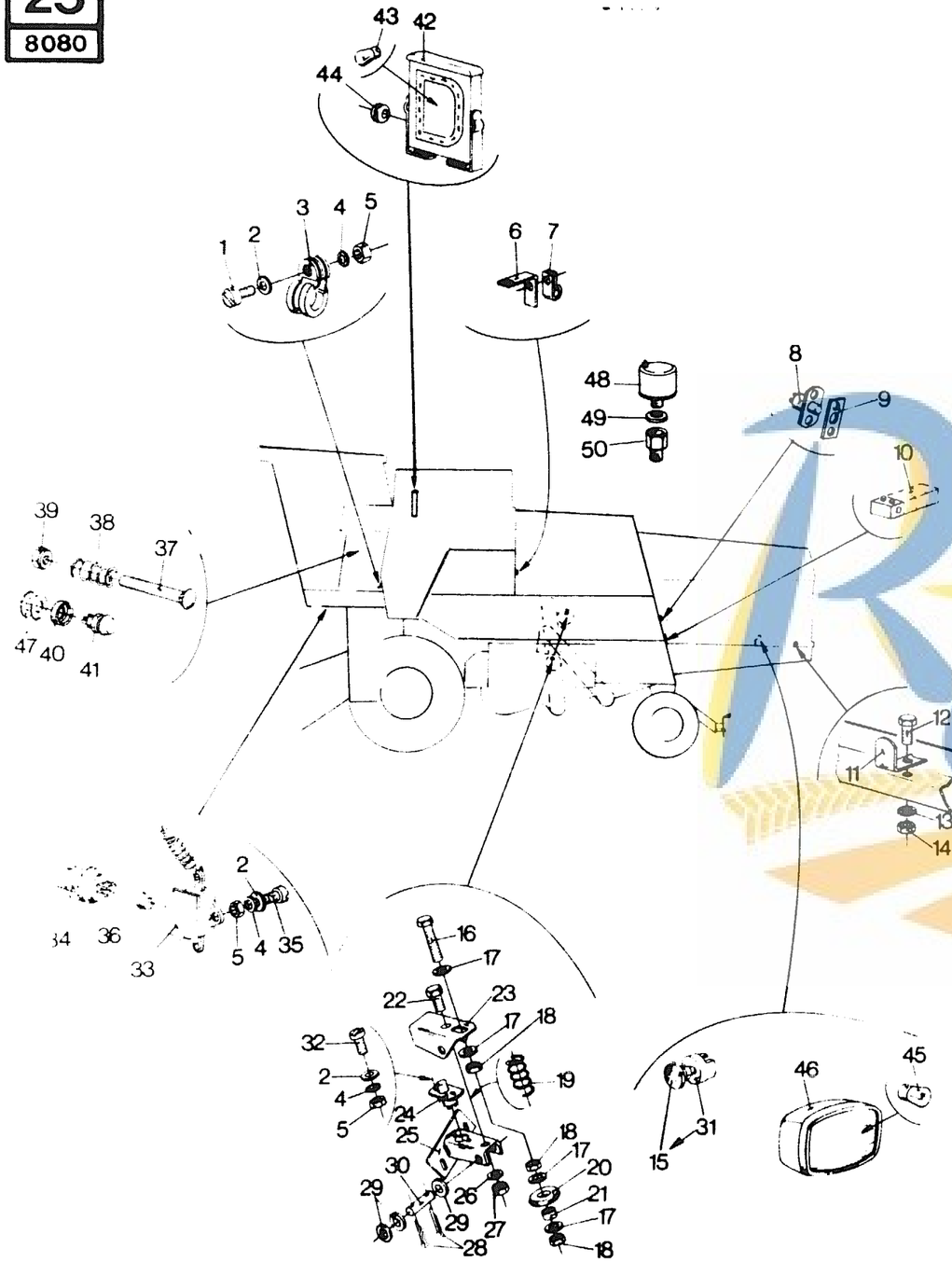

ELECTRICAL EQUIPMENT
EQUIPEMENT ELECTRIQUE
ELEKTRISCHE AUSRÜSTUNG
IMPIANTO ELETTRICO
ELEKTRISCHE UITRUSTING

MODEL 8070 - 8080

Fig.	Order Ref.	CD	8070	8080	Code	Description	N.B.
1	120007	5	10	10		Machine screw	
2	140013	2	10	10		Plain washer	
3	335021	4	4	4		Clamp	
4	322355	6	10	10		Tooth lockwasher	
5	100012	2	10	10		Hex. nut	
6	398712	4	1	1		Bracket	
7	332404	3	1	1		Clamp	
8	410473	3	1	1		Switch	For service step
9	410472	1	1	1		Protection	
10	433132	8	6	6		Wiring connector	
11	394927	5	2	2		Bracket	
12	120103	9	2	2		Hex. cap screw	
13	322358	2	2	2		Tooth lockwasher	
14	100015	8	2	2		Hex. nut	
15	399243	0	1	1		Bulb	
16	120116	6	2	2		Hex. cap screw	
17	378244	7	8	8		Plain washer	
18	100016	0	8	8		Hex. nut	
19	398765	5	2	2		Spring	
20	398201	1	2	2		Pressure wheel	0.7
21	338943	1	2	2		Bushing	
22	300506	1	6	6		Hex. cap screw	
23	398202	3	2	2		Adjusting bracket	0.7
24	394945	3	2	2		Switch	0.8
25	398205	9	2	2		Bracket	
26	140015	6	2	2		Plain washer	
27	353308	4	2	2		Hex. lock nut	
28	130002	7	2	2		Cotter pin	
29	378243	5	AR	AR		Shim washer	
30	385983	5	2	2		Pivot pin	
31	398227	5	1	1		Switch assembly	Incl.fig.15
32	321803	6	2	2		Machine screw	
33	470041	0	2	2		Switch	0.4
34	354372	0	1	1		Hydraulic switch	0.5
35	120008	7	2	2		Machine screw	
36	355596	5	1	1		Rubber grommet	
37	120216	8	1	1		Carriage bolt	Hydrostatic drive
38	180072	4	1	1		Spring	Hydrostatic drive
39	100067	7	1	1		Hex. lock nut	Hydrostatic drive
40	397986	2	1	1		Retainer	Hydrostatic drive
41	335378	9	1	1		Switch	Hydrostatic drive
42	418872	7	1	1		"D" light	

https://michelroger.be

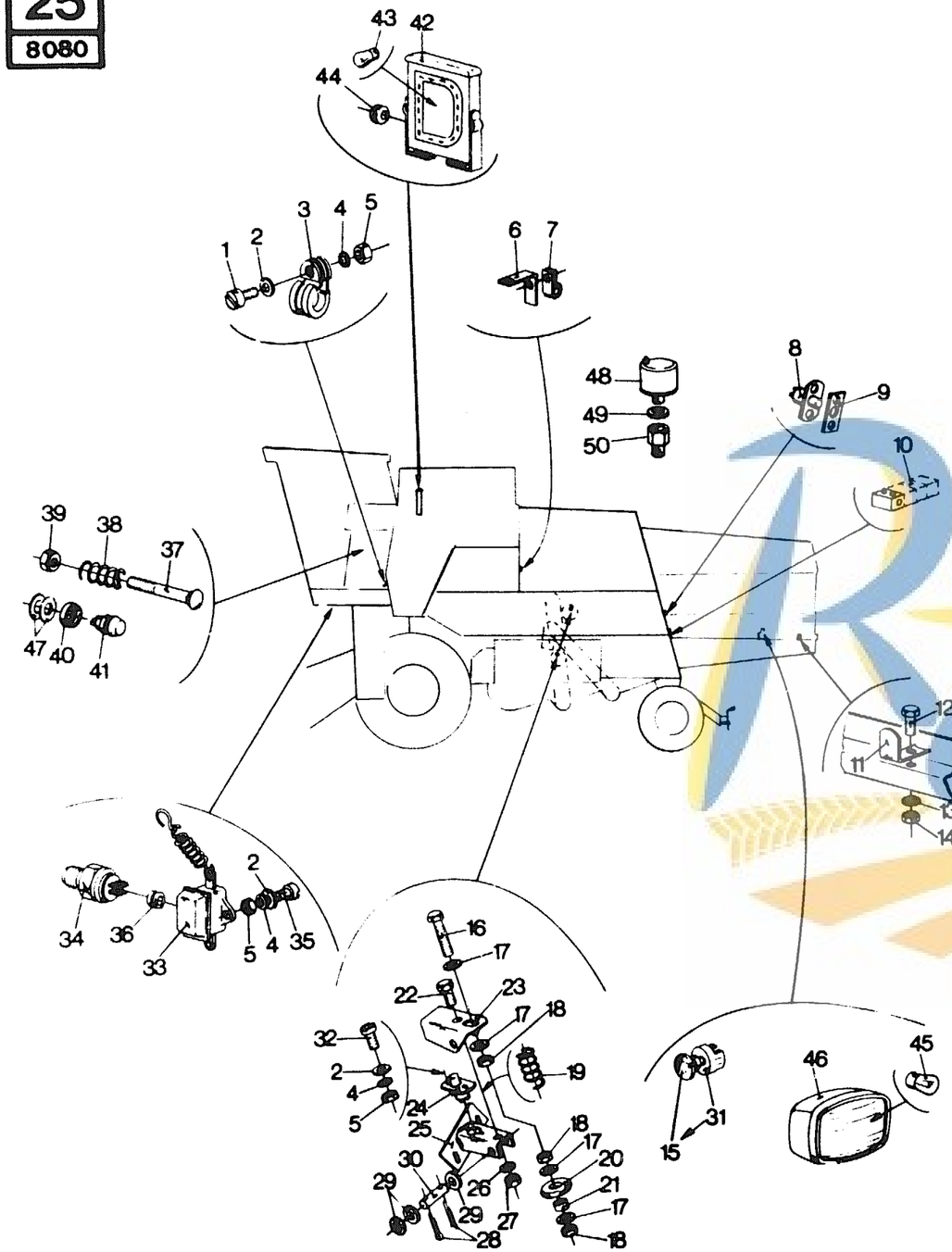

ELECTRICAL EQUIPMENT
EQUIPEMENT ELECTRIQUE
ELEKTRISCHE AUSRÜSTUNG
IMPIANTO ELETTRICO
ELEKTRISCHE UITRUSTING

MODEL 8070 - 8080

Fig.	Order Ref.	CD	8070	8080	Code	Description	N.B.
43	470016	7	1	1		Bulb	
44	334696	2	1	1		Rubber grommet	
45	398877	2	1	1		Bulb	
46	398226	3	1	1		Fog light assy	
47	140193	2	2	2		Plain washer	Hydrostatic drive
48	434529	0	1	1		Sender, Oil pressure	
49	220049	4	1	1		Seal washer	
50	436338	7	1	1		Adapter fitting	

ROGER
Michel

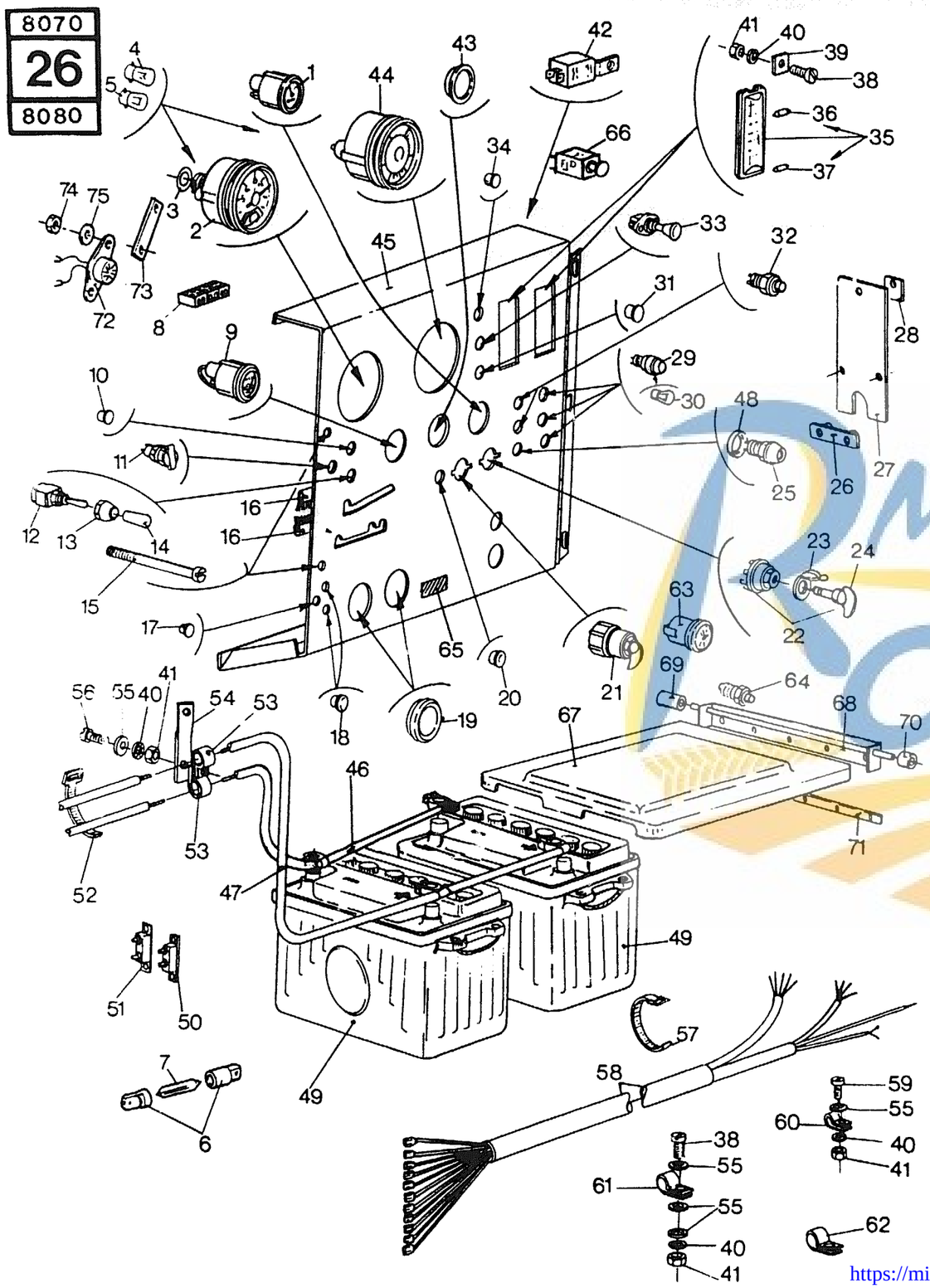

ELECTRICAL EQUIPMENT
EQUIPEMENT ELECTRIQUE
ELEKTRISCHE AUSRÜSTUNG
IMPIANTO ELETTRICO
ELEKTRISCHE UITRUSTING

FORD
MERCEDES
FIAT

ENGINE
MOTOR
MOTEUR
MOTORE

MODEL 8070 - 8080

Fig.	Order Ref.	CD	8070	8080	Code	Description		N.B
1	422125 8		1	1		Hour counter		
2	334906 9		1	1		Tachometer, Mainshaft	0.5	Incl.figs.3,4 and 5
3	355212 3		1	1		"O" ring		
4	353078 5		4	4		Bulb, 4 w	0.4	
5	470013 1		3	3		Bulb, 2 w		
6	393900 8		1	1		Fuse holder		Incl.fig.7
7	393901 0		1	1		Fuse, 25 A		
8	430015 7		4	4		Wiring connector		
9	350876 4			1		Indicator, Traction variator	0.5	
10	336456 6		2	2		Rubber plug		
11	374418 2		1	1		Socket (for portable lamp)	0.4	
12	393428 6		1	1		Switch, Reel speed Control		
13	394309 5		1	1		Seal cap		
14	266963 6		1	1		Lever		
15	412259 1		2	2		Machine screw		
16	428880 6		4	4		Brush		
17	437842 7		1	1		Rubber plug		
18	437841 5		2	2		Rubber plug		
19	432621 4		2	2		Rubber plug		
	444597 5		4	4		Plate		
20	433244 5		1	1		Rubber plug		
21	336096 2		1	1		Switch, Direction indicator	0.4	
22	383418 3		1	1		Ignition switch	0.4	Incl.fig.24 Mercedes and Fiat engines
	470030 7		1			Ignition switch	0.4	Ford engine
23	330677 8		1	1		Cap		
24	383419 5		2	2		Ignition key		
25	335378 9		1	1		Push button, Starter		Mercedes and Fiat engines
	323116 1		1			Starter switch		Ford engine
26	432626 4			1		Socket plate		
27	392508 5		1	1		Plate		
28	397644 8		1	1		Plate		
29	353077 3		3	3		Control light	0.4	
30	353078 5		3	3		Bulb, 4 w		
31	336456 6		3	3		Rubber plug		
32	300934 8		2	2		Push button	0.4	

https://michelroger.be

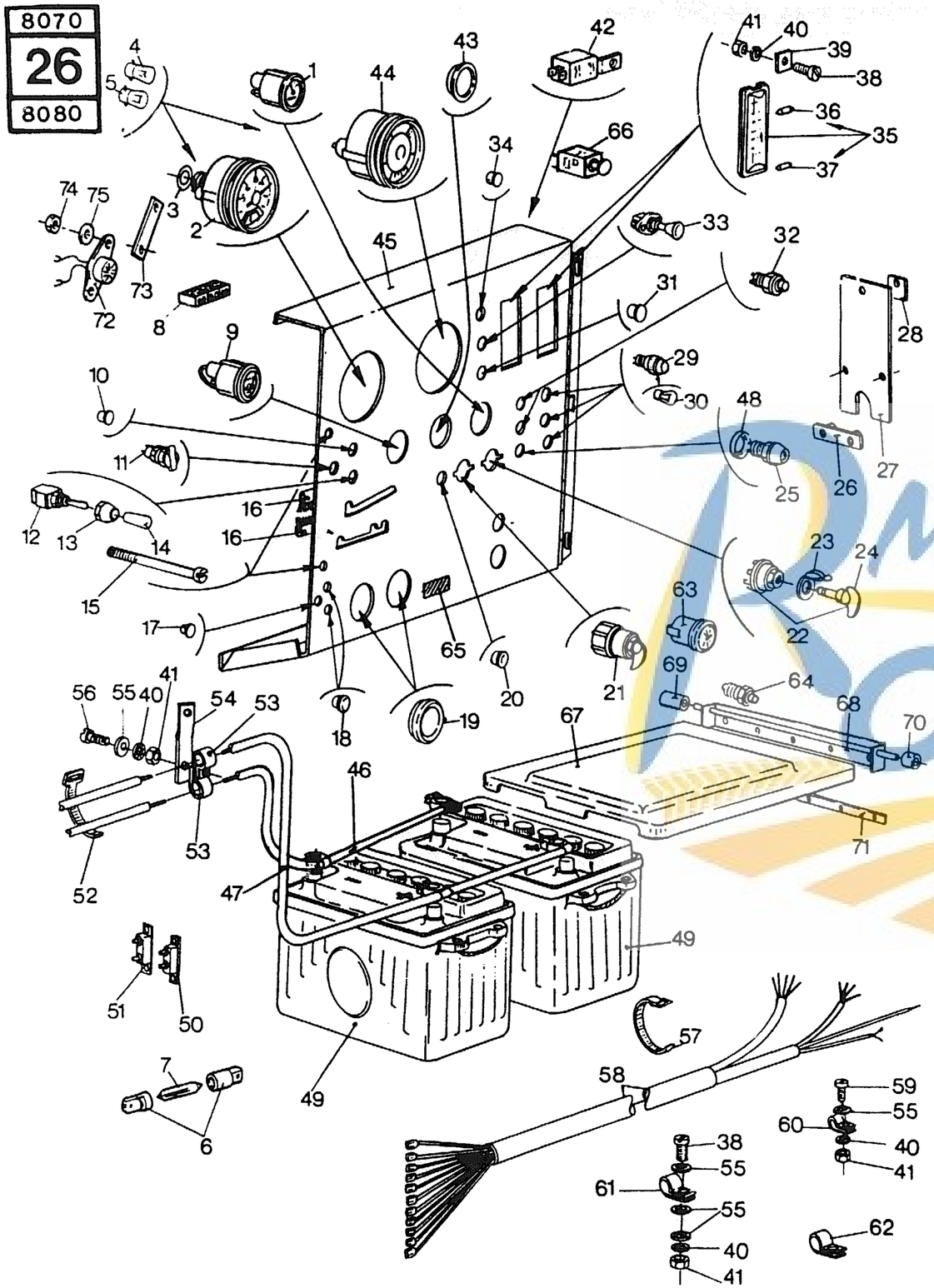

86

ELECTRICAL EQUIPMENT
EQUIPEMENT ELECTRIQUE
ELEKTRISCHE AUSRÜSTUNG
IMPIANTO ELETTRICO
ELEKTRISCHE UITRUSTING

FORD
MERCEDES
FIAT

ENGINE
MOTOR
MOTEUR
MOTORE

MODEL 8070 8080

Fig.	Order Ref.	CD	8070	8080	Code	Description		N.B
33	470033 3		1	1		Switch, Operatings lights		
34	336455 4		1	1		Rubber plug		
35	357554 9		2	2		Fuse box		Incl.figs.36 and 37
36	336851 4		14	14		Fuse	0.3	
37	354257 6		2	2		Fuse		
38	120008 7		12	12		Machine screw		
39	358754 4		2	2		Lock plate		
40	322355 6		12	12		Tooth lockwasher		
41	100012 2		12	12		Hex. nut		
42	441074 4		1	1		Flasher unit	0.4	
43	394228 3		3	3		Rubber plug		
44	411002 7			1		Gauge, Oil pressure & temperature	0.5	
45	429646 1		1	1		Instrument panel		Mercedes engines
	432729 2		1			Instrument panel		Fiat engines
	432730 5			1		Instrument panel		Fiat engines
	432420 8		1			Instrument panel		Ford engine
46	395971 5			1		Battery cable, Negative		
	334605 1		1			Battery cable, Negative		
47	398231 4			1		Battery cable, Positive		
	334606 3		1			Battery cable, Positive		
48	397986 2			1		Retainer		
49	356781 9		2		745	Battery, 12V – 72 Ah	0.4	
	456142 6		2		55	Battery, 12V – 72 Ah	0.4	
	356781 9			2	333	Battery, 12V – 72 Ah	0.4	
	456142 6			2	44	Battery, 12V – 72 Ah	0.4	
	425463 9			2	333	Battery, 12V – 88 Ah	0.4	
	456143 8			2	44	Battery, 12V – 88 Ah	0.4	
50	514967 5		1	1		Circuit breaker, 40 A		
51	198445 5		1	1		Circuit breaker, 30 A		
52	323597 9		AR	AR		Cable strap		
53	335021 4		6	6		Cable strap		
54	395969 4		1	1		Bracket		
55	335872 7		10	10		Plain washer		
56	120007 5		2	2		Machine screw		
57	368582 1		1	1		Clamp		
58	423089 3			1		Wiring loom, Engine	1.7	Mercedes OM 401 and OM 421 engines
	425601 3		1			Wiring loom, Engine	1.7	Ford 2704 ET engine
	423088 1		1			Wiring loom, Engine	1.7	Mercedes OM 352 A engine
	432726 6		1			Wiring loom, Engine	1.7	Fiat 8361 engine
	444828 6		1			Wiring loom, Engine	1.7	Fiat 8361 SI engine

https://michelroger.be 60

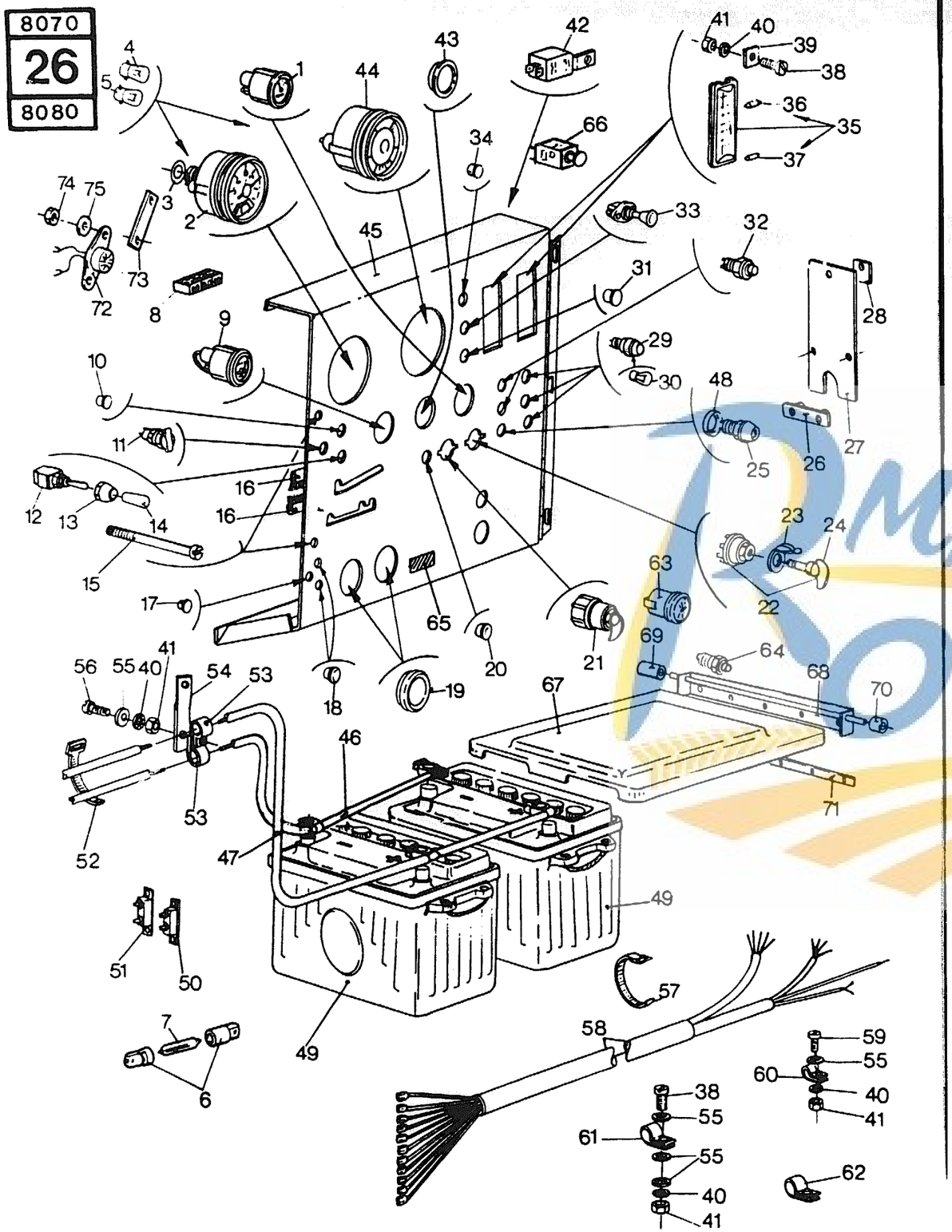

87 A

ELECTRICAL EQUIPMENT
EQUIPEMENT ELECTRIQUE
ELEKTRISCHE AUSRÜSTUNG
IMPIANTO ELETTRICO
ELEKTRISCHE UITRUSTING

FORD
MERCEDES
FIAT

ENGINE
MOTOR
MOTEUR
MOTORE

MODEL 8070 - 8080

Fig.	Order Ref.	CD	8070	8080	Code	Description	N.B
59	321803 6			4		Machine screw	
60	353072 3		8	8		Clamp	
61	335036 5		3	3		Clamp	
62	332404 3		2	2		Clamp	
63	435468 1		1		378	Sonal switch	Hydrostatic drive
	450073 3		1		42	Sonal switch	Hydrostatic drive
	435468 1			1	441	Sonal switch	Hydrostatic drive
	450073 3			1	45	Sonal switch	Hydrostatic drive
64	300934 8		1		378	Push button	Hydrostatic drive
	300934 8			1	441	Push button	Hydrostatic drive
65	452098 7			1		Decal	Fiat engine
	452097 5		1			Decal	Fiat engine
	452096 3		1	1		Decal	Mercedes engine
66	398222 5		1	1		Warning switch	Germany only
67	9501830 9		1		73	Cover	
	9501830 9			1	57	Cover	For 12V 77 Ah battery
	916596 4			1	57	Cover	For 12V 88 Ah battery
68	9501832 3		1		73	Hinge	
	9501832 3			1	57	Hinge	
69	9501833 5		1		73	Bushing	
	9501833 5			1	57	Bushing	
70	9501834 7		1		73	Bushing	
	9501834 7			1	57	Bushing	
71	9501845 0		1		73	Strip	
	9501845 0			1	57	Strip	
72	9510836 2		1			Buzzer	Spain only
73	9510816 0		1			Support	Spain only
74	100013 4		1			Hex. nut	M5 Spain only
75	322356 8		1			Lockwasher	Ø5 mm Spain only

ROGER
https://michelroger.be

Michel ROGER GROUP

27 ➧ 29

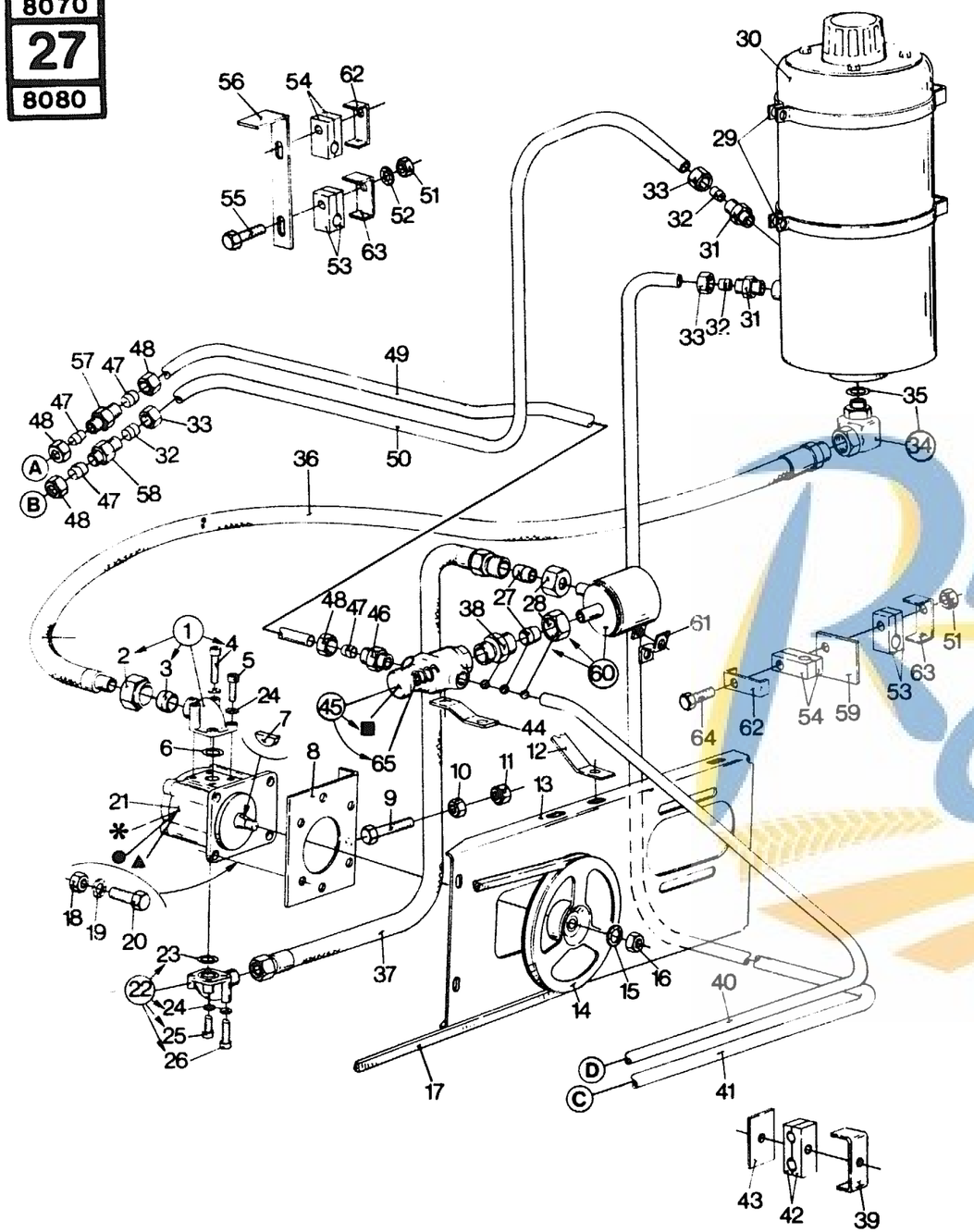

HYDRAULIC EQUIPMENT
EQUIPEMENT HYDRAULIQUE
HYDRAULISCHE AUSRÜSTUNG
IMPIANTO IDRAULICO
HYRAULISCHE UITRUSTING

From Serial No. 4214001 to 4228999 (8070)
4113001 to 4121999 (8080)
MODEL 8070 - 8080

Fig.	Order Ref.	CD	8070	8080	Code	Description	N.B.
1	337209 4		1		492	Elbow assembly	Incl. figs. 2 to 6 and 24
	337209 7			1	330	Elbow assembly	Incl. figs. 2 to 6 and 24
2	357077 7		1		492	Coupler nut	
	357077 7			1	330	Coupler nut	
3	357078 9		1		492	Ferrule	
	357078 9			1	330	Ferrule	
4	356464 7		2		492	Screw, socket head	
	356464 7			2	330	Screw, socket head	
5	120229 5		5		492	Screw, socket head	
	120229 5			5	330	Screw, socket head	
6	356427 9		1		492	"O" ring	
	356427 9			1	330	"O" ring	
7	388250 2		1		492	Woodruff key	0.9
	388250 2			1	330	Woodruff key	0.9
8	397467 2		1		492	Support	
	397467 2			1	330	Support	
9	360296 6		1		492	Hex. cap screw	
	360296 6			1	330	Hex. cap screw	
10	100016 0		1		492	Hex. nut	
	100016 0			1	330	Hex. nut	
11	412141 2		1		492	Hex. lock nut	
	412141 2			1	330	Hex lock nut	
12	424320 6		1		492	Bracket	
	424320 6			1	330	Bracket	
13	397470 9		1		492	Plate	
	397470 9			1	330	Plate	
14	397100 6		1		492	Pulley	0.9
	397100 6			1	330	Pulley	0.9
15	140046 1		1		492	Tooth lockwasher	
	140046 1			1	330	Tooth lockwasher	
16	322589 1		1		492	Hex. jam nut	
	322589 1			1	330	Hex. jam nut	
17	230151 3		1		492	V-belt	2.6
	230151 3			1	330	V-belt	2.6
18	100015 8		4		492	Hex. nut	
	100015 8			4	330	Hex. nut	
19	322358 2		4		492	Tooth lockwasher	
	322358 2			4	330	Tooth lockwasher	
20	120161 1		4		492	Hex. cap screw	
	120161 1			4	330	Hex. cap screw	

https://michelroger.be

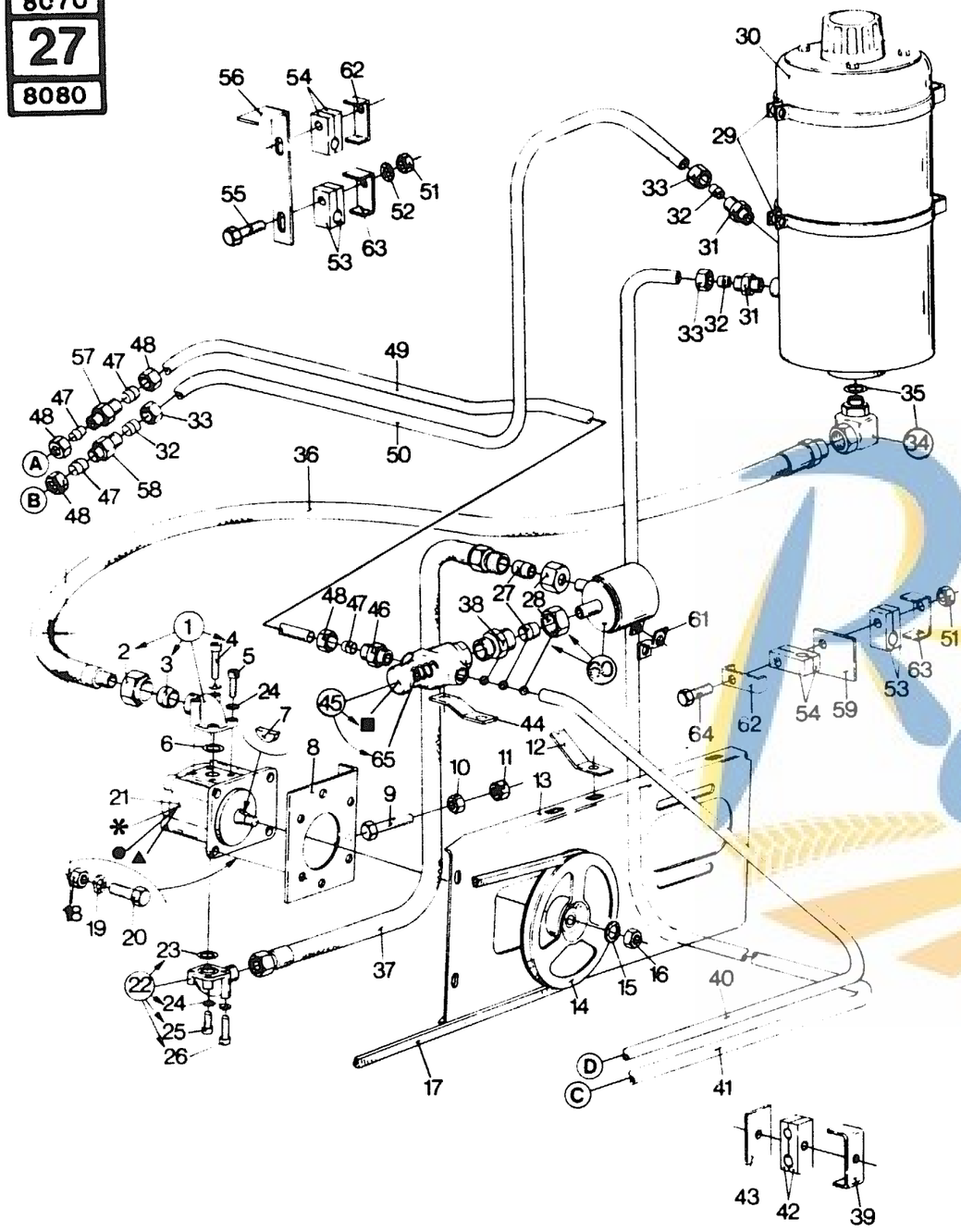

HYDRAULIC EQUIPMENT
EQUIPEMENT HYDRAULIQUE
HYDRAULISCHE AUSRÜSTUNG
IMPIANTO IDRAULICO
HYRAULISCHE UITRUSTING

From Serial No. 4214001 to 4228999 (8070)
4113001 to 4121999 (8080)
MODEL 8070 - 8080

Fig.	Order Ref.	CD	8070	8080	Code	Description		N.B.
21	421596 6		1		492	Hydraulic pump (Bosch)	1.4	For details see group 33
	421596 6			1	330	Hydraulic pump (Bosch)	1.4	For details see group 33
	421597 8		1		492	Hydraulic pump (Vickers)	1.4	Incl. fig. *
	421597 8			1	330	Hydraulic pump (Vickers)	1.4	Incl. fig. *
	426984 4		1		492	Hydraulic pump (Dowty)	1.4	Incl. fig. ●
	426984 4			1	330	Hydraulic pump (Dowty)	1.4	Incl. fig. ●
22	337208 2		1		492	Elbow fitting assy		Incl. figs. 23 to 28
	337208 2			1	330	Elbow fitting assy		Incl. figs. 23 to 28
23	304967 1		1		492	"O" ring		
	304967 1			1	330	"O" ring		
24	322357 0		68		492	Tooth lockwasher		
	322357 0			68	330	Tooth lockwasher		
25	120229 5		2		492	Screw, socket head		
	120229 5			2	330	Screw, socket head		
26	356463 5		2		492	Screw, socket head		
	356463 5			2	330	Screw, socket head		
27	335169 6		3		492	Ferrule		
	335169 6			3	330	Ferrule		
28	335171 1		1		492	Coupler nut		
	335171 1			1	330	Coupler nut		
29	396402 5		2		492	Clamp		
	396402 5			2	330	Clamp		
30	378757 4		1		492	Reservoir	1.4	For details see group 35
	378757 4			1	330	Reservoir	1.4	For details see group 35
31	394373 0		2		492	Connector fitting, straight		
	394373 0			2	330	Connector fitting, straight		
32	335168 4		2		492	Ferrule		
	335168 4			2	330	Ferrule		
33	335170 9		2		492	Coupler nut		
	335170 9			2	330	Coupler nut		
34	378841 3		1		492	Elbow fitting		Incl. fig. 35
	378841 3			1	330	Elbow fitting		Incl. fig. 35
35	167266 8		1		492	"O" ring		
	167266 8			1	330	"O" ring		

https://michelinger.be 64

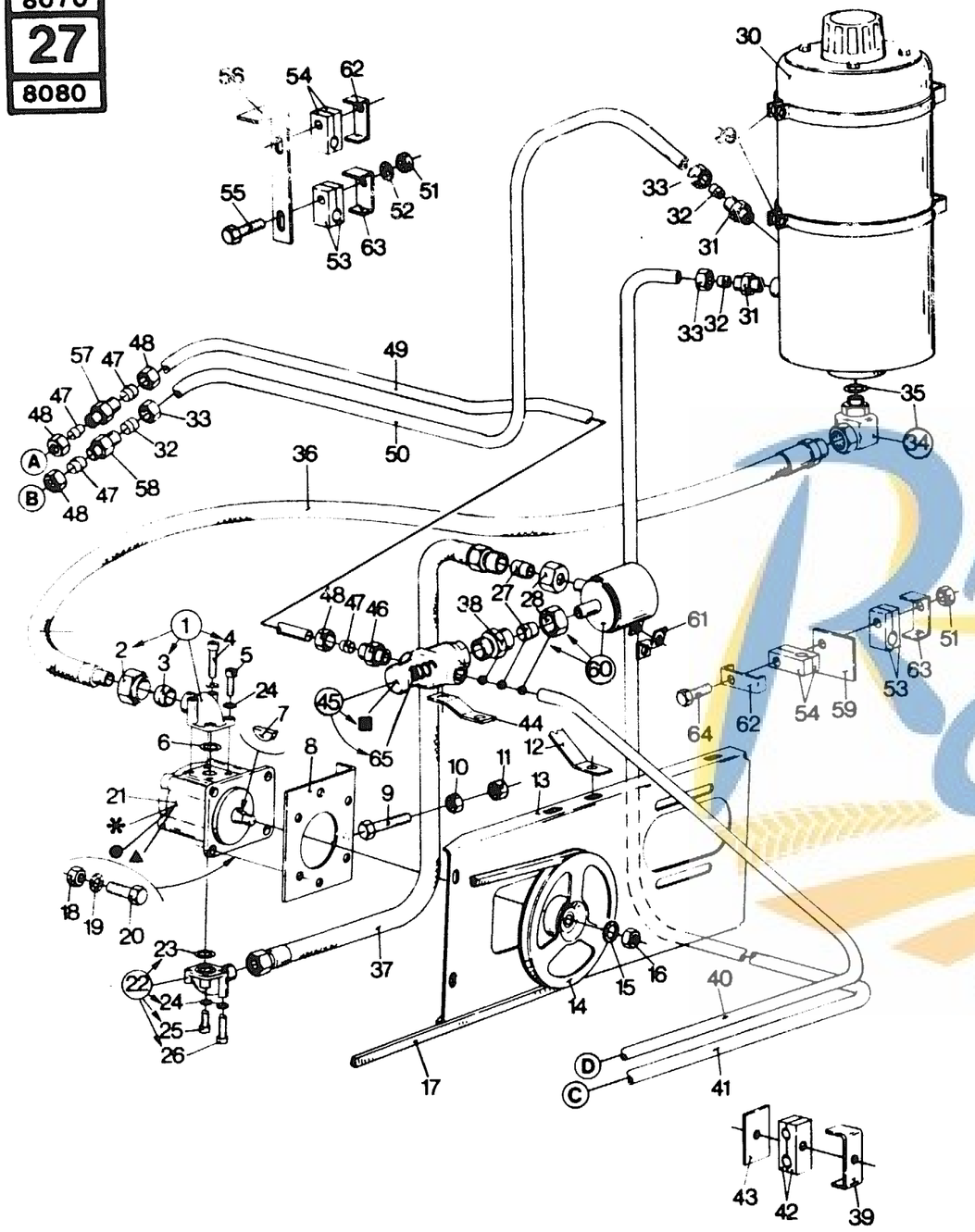

HYDRAULIC EQUIPMENT
EQUIPEMENT HYDRAULIQUE
HYDRAULISCHE AUSRÜSTUNG
IMPIANTO IDRAULICO
HYRAULISCHE UITRUSTING

From Serial No. 4214001 to 4228999 (8070)
4113001 to 4121999 (8080)
MODEL 8070 - 8080

Fig.	Order Ref.	CD	8070	8080	Code	Description	N.B.	
36	420893 5		1		492	Hydraulic hose	0.8	
	420893 5			1	330	Hydraulic hose	0.8	
37	426397 9		1		492	Hydraulic hose	0.8	
	426397 9			1	330	Hydraulic hose	0.8	
38	394372 8		1		492	Connector fitting, straight		
	394372 8			1	330	Connector fitting, straight		
39	431942 3			5	330	Clamp bracket		
40	+			1	330	Hydraulic pipe		Ø 16 mm (5/8")
41	+			1	330	Hydraulic pipe		Ø 18 mm (23/32")
42	430356 9		1		492	Clamp		Ø 16 - Ø 18 mm (5/8" - 23/32")
	430356 9			1	330	Clamp		Ø 16 - Ø 18 mm (5/8" - 23/32")
43	434103 8		1		492	Plate		
	434103 8			1	330	Plate		
44	399156 5		1		492	Bracket		
	399156 5			1	330	Bracket		
45	338010 4		1		492	Flow divider	0.5	Incl. figs. 65 and ■
	338010 4			1	330	Flow divider	0.5	Incl. figs. 65 and ■
46	395782 8		1		492	Connector fitting, straight		
	395782 8			1	330	Connector fitting, straight		
47	150015 8		8		492	Ferrule		
	150015 8			8	330	Ferrule		
48	100043 7		8		492	Coupler nut		
	100043 7			8	330	Coupler nut		
49	+		1		492	Hydraulic pipe		Ø 12 mm (15/32")
	+			1	330	Hydraulic pipe		Ø 12 mm (15/32")
50	+		1		492	Hydraulic pipe		Ø 18 mm (23/32")
	+			1	330	Hydraulic pipe		Ø 18 mm (23/32")
51	412152 5		AR		492	Hex. nut		
	412152 5			AR	330	Hex. nut		
52	140015 6		AR		492	Plain washer		
	140015 6			AR	330	Plain washer		
53	433007 3		2		492	Clamp		Ø 16 - Ø 18 mm (5/8" - 23/32")
	433007 3			2	330	Clamp		Ø 16 - Ø 18 mm (5/8" - 23/32")
54	433008 5			2	330	Clamp		Ø 8 - Ø 12 mm (5/16" - 15/32")
	430356 9		1		492	Clamp		Ø 8 - Ø 12 mm (5/16" - 15/32")
55	120056 8		1		492	Hex. cap screw		
	120056 8			1	330	Hex. cap screw		

https://michelroger.be 65

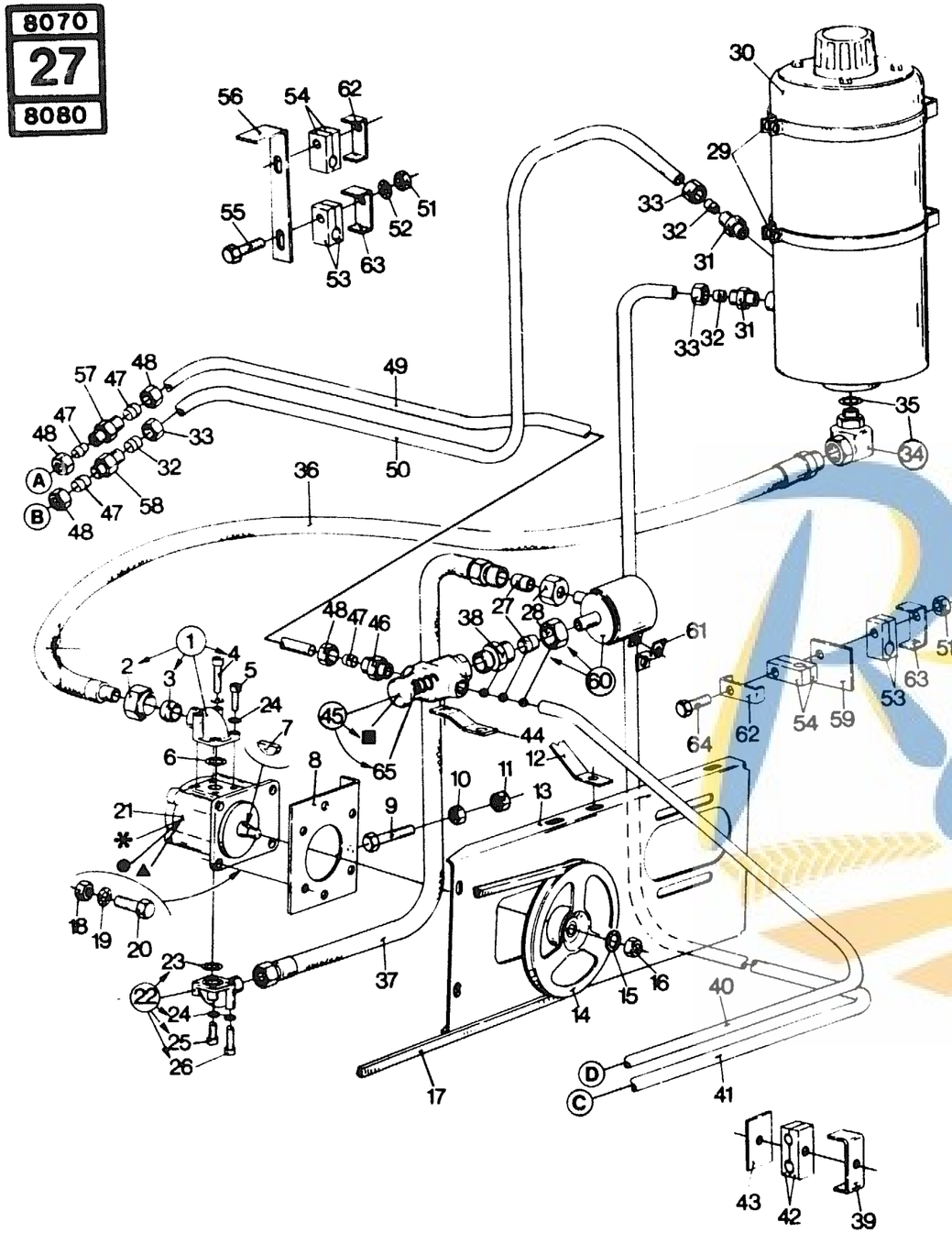

HYDRAULIC EQUIPMENT
EQUIPEMENT HYDRAULIQUE
HYDRAULISCHE AUSRÜSTUNG
IMPIANTO IDRAULICO
HYRAULISCHE UITRUSTING

ONLY VALID FROM SERIAL No : 4214001 to 4228999 (8070)
4113001 to 4121999 (8080)

MODEL 8070 - 8080

Fig.	Order Ref.	CD	8070	8080	Code	Description	N.B	
56	434102 6		1		492	Bracket		
	434102 6			1	330	Bracket		
57	150018 4		1		492	Connector fitting, straight		
	150018 4			1	330	Connector fitting, straight		
58	394374 2		1		492	Connector fitting, straight		
	394374 2			1	330	Connector fitting, straight		
59	434256 1		1		492	Bracket		
	434256 1			1	330	Bracket		
60	431234 2		1		866	Damper assembly	0.5	Incl. figs. 27 and 28
	9502708 1		1		76	Damper assembly	0.5	Incl. figs. 27 and 28
	431234 2			1		Damper assembly	0.5	Incl. figs. 27 and 28
61	426625 4		1		492	Bracket		
	426625 4			1	330	Bracket		
62	433101 3		1		492	Clamp bracket		
	433101 3			1	330	Clamp bracket		
63	433100 1		1		492	Clamp bracket		
	433100 1			1	330	Clamp bracket		
64	397985 0		1		492	Hex. cap screw		
	397985 0			1	330	Hex. cap screw		
65	356341 7		1		492	Spring		
	356341 7			1	330	Spring		
★	422156 5		1		492	Seal kit		Vickers pump
	422156 5			1	330	Seal kit		Vickers pump
●	426983 2		1		492	Seal kit		Dowty pump
	426983 2			1	330	Seal kit		Dowty pump
▲	387506 4		1		492	Seal kit		Bosch pump
	387506 4			1	330	Seal kit		Bosch pump
■	396024 3		1		492	Seal kit		
	396024 3			1	330	Seal kit		

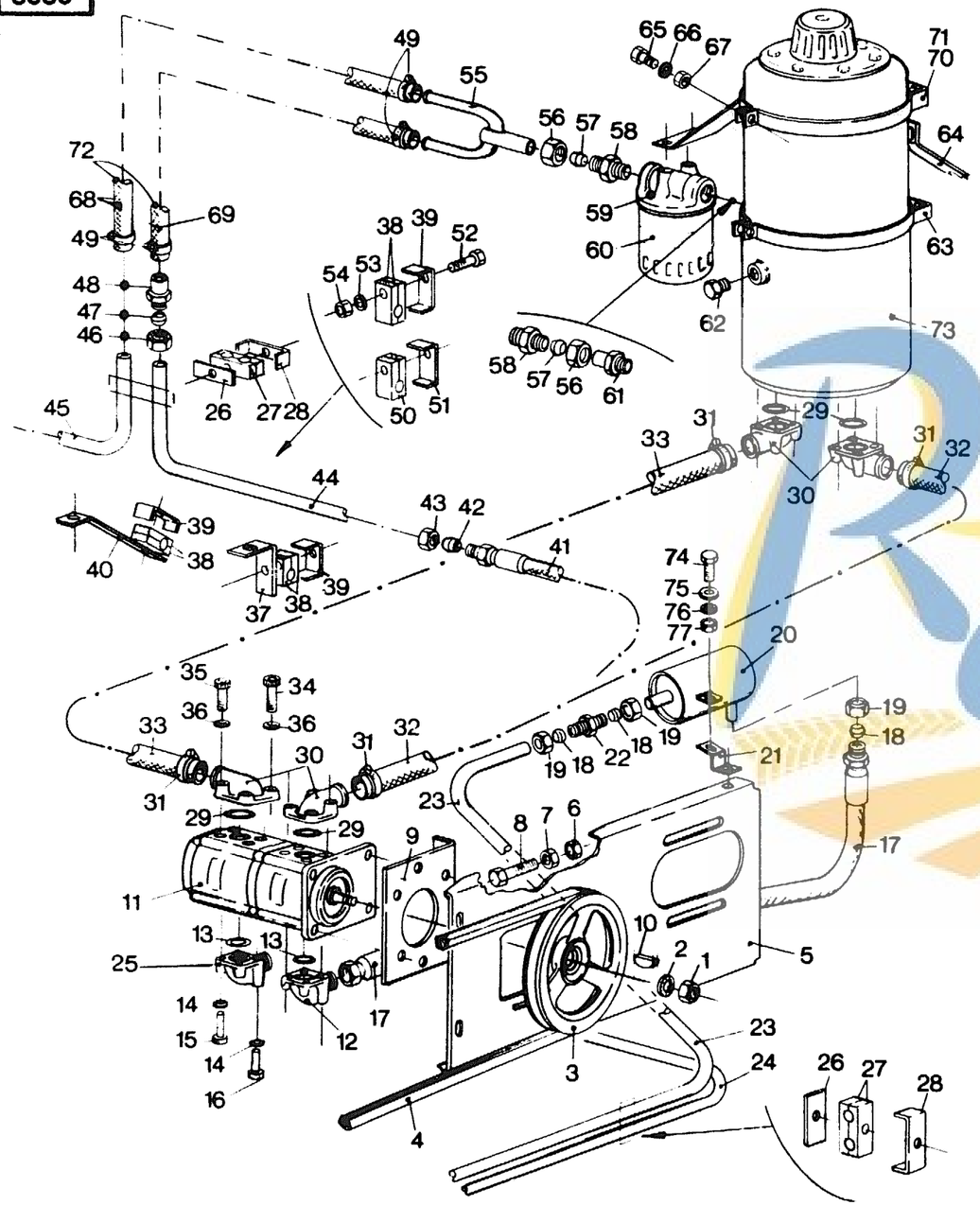

HYDRAULIC EQUIPMENT
EQUIPEMENT HYDRAULIQUE
HYDRAULISCHE AUSRÜSTUNG
IMPIANTO IDRAULICO
HYRAULISCHE UITRUSTING

Used above Serial No. 4229001 (8070)
4122001 (8080)
MODEL 8070 - 8080

Fig.	Order Ref.	CD	8070	8080	Code	Description	N.B.
1	322589	1	1		47	Hex. jam nut	
	322589	1		1	40	Hex. jam nut	
2	140046	1	1		47	Tooth lockwasher	
	140046	1		1	40	Tooth lockwasher	
3	397100	6	1		47	"V" pulley	
	397100	6		1	40	"V" pulley	
4	230151	3	1		47	"V" belt	
	230151	3		1	40	"V" belt	
5	397470	9	1		47	Plate	
	397470	9		1	40	Plate	
6	412141	2	1		47	Hex. lock nut	
	412141	2		1	40	Hex. lock nut	
7	100016	0	1		47	Hex. nut	
	100016	0		4	40	Hex. nut	
8	360296	6	1		47	Hex. cap screw	
	360296	6		1	40	Hex. cap screw	
9	397467	2	1		47	Plate	
	397467	2		1	40	Plate	
10	388250	2	1		853	Woodruff key	
	336424	9	1		60	Woodruff key	
	388250	2		1	519	Woodruff key	
	336424	9		1	48	Woodruff key	
11	447288	3	1		47	Hydraulic pump	For details see group 33A
	447288	3		1	40	Hydraulic pump	For details see group 33A
12	337208	2	1		47	Elbow fitting	Incl. figs. 13 to 16
	337208	2		1	40	Elbow fitting	Incl. figs. 13 to 16
13	304967	1	1		47	"O" ring	
	304967	1		1	40	"O" ring	
14	322357	0	4		47	Tooth lockwasher	
	322357	0		4	40	Tooth lockwasher	
15	120229	5	2		47	Screw, socket head	
	120229	5		2	40	Screw, socket head	
16	356463	5	2		47	Screw, socket head	
	356463	5		2	40	Screw, socket head	
17	426397	9	1		47	Hydraulic hose	
	426397	9		1	40	Hydraulic hose	
18	335169	6	AR		47	Ferrule	
	335169	6		AR	40	Ferrule	
19	335171	1	AR		47	Coupler nut	
	335171	1		AR	40	Coupler nut	
20	431234	2	1		47	Damper	
	431234	2		1	40	Damper	

https://michelroger.be 67

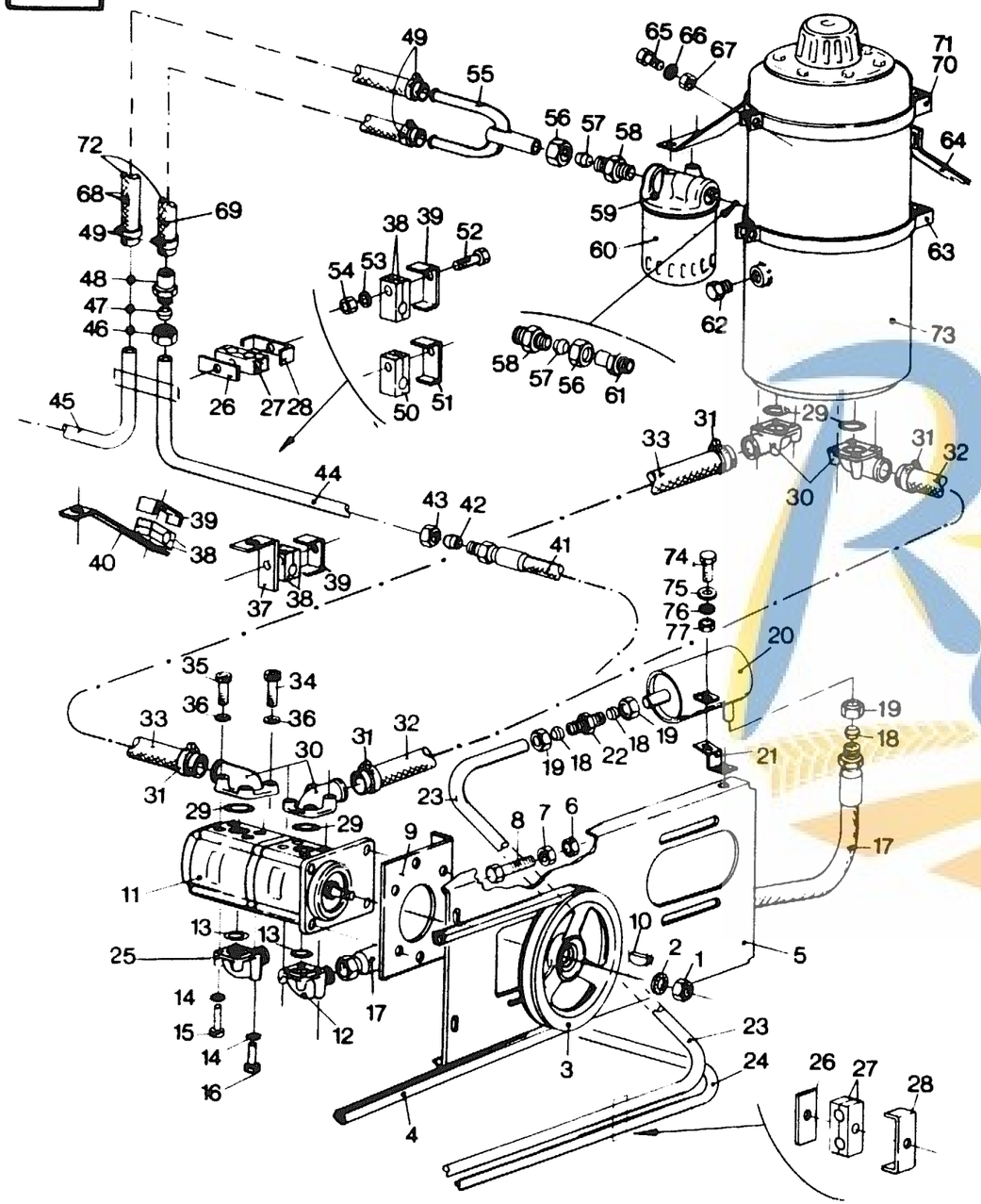

HYDRAULIC EQUIPMENT
EQUIPEMENT HYDRAULIQUE
HYDRAULISCHE AUSRÜSTUNG
IMPIANTO IDRAULICO
HYRAULISCHE UITRUSTING

Used above Serial No. 4229001 (8070)
4122001 (8080)
MODEL 8070 · 8080

Fig.	Order Ref.	CD	8070	8080	Code	Description	N.B.
21	426625	4	1		47	Bracket	
	426625	4		1	40	Bracket	
22	335174	7	AR		47	Connector fitting, straight	
	335174	7		AR	40	Connector fitting, straight	
23	+		1		47	Hydraulic pipe	
	+			1	40	Hydraulic pipe	
24	+		1		47	Hydraulic pipe	
	+			1	40	Hydraulic pipe	
25	150090	6	1		47	Elbow fitting	Incl. figs. 13 to 16
	150090	6		1	40	Elbow fitting	Incl. figs. 13 to 16
26	434103	8	3		47	Plate	
	434103	8		3	40	Plate	
27	430356	9	14		47	Clamp	Ø 16 mm (5/8")
	430356	9		14	40	Clamp	Ø 16 mm (5/8")
28	431942	3	7		47	Clamp bracket	
	431942	3		7	40	Clamp bracket	
29	167266	8	4		47	"O" ring	
	167266	8		4	40	"O" ring	
30	450594	7	4		47	Elbow fitting	
	450594	7		4	40	Elbow fitting	
31	382527	3	4		47	Hose clamp	
	382527	3		4	40	Hose clamp	
32	450970	5	1		47	Hydraulic hose	
	450970	5		1	40	Hydraulic hose	
33	450698	7	1		47	Hydraulic hose	
	450698	7		1	40	Hydraulic hose	
34	120229	5	8		47	Screw, socket head	
	120229	5		8	40	Screw, socket head	
35	356464	7	8		47	Screw, socket head	
	356464	7		8	40	Screw, socket head	
36	140044	7	16		47	Tooth lockwasher	
	140044	7		16	40	Tooth lockwasher	
37	451264	9	1		47	Bracket	
	451264	9		1	40	Bracket	
38	433008	5	2		47	Clamp	
	433008	5		2	40	Clamp	
39	442340	0	1		47	Clamp bracket	
	442340	0		1	40	Clamp bracket	
40	450688	6	1		47	Clamp bracket	
	450688	6		1	40	Clamp bracket	
41	160164	5	1		47	Hydraulic hose	
	160164	5		1	40	Hydraulic hose	
42	150015	8	AR		47	Ferrule	
	150015	8		AR	40	Ferrule	

https://michelroger.be 68

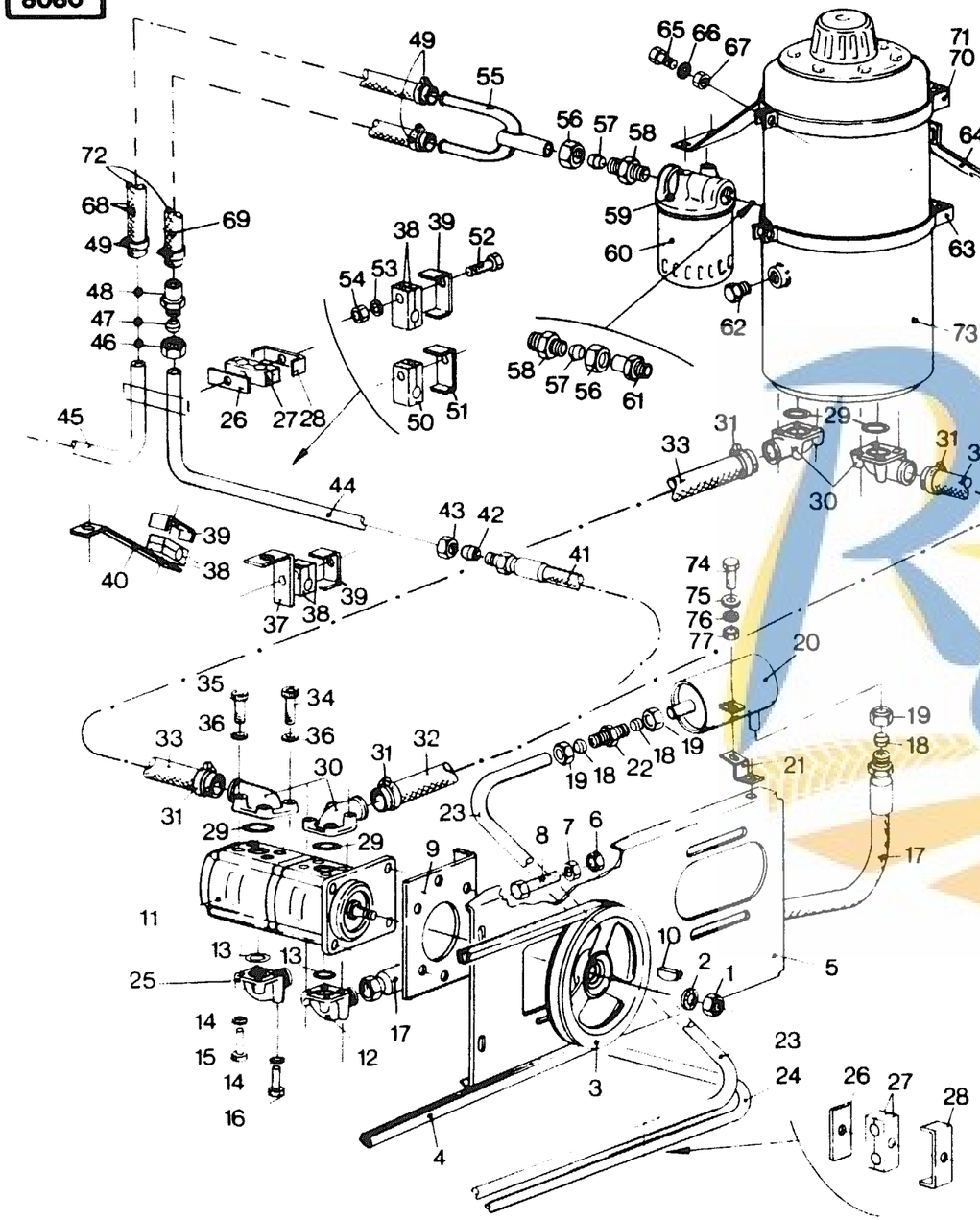

HYDRAULIC EQUIPMENT
EQUIPEMENT HYDRAULIQUE
HYDRAULISCHE AUSRÜSTUNG
IMPIANTO IDRAULICO
HYRAULISCHE UITRUSTING

Used above Serial No. 4229001 (8070)
4122001 (8080)
MODEL 8070 - 8080

Fig.	Order Ref.	CD	8070	8080	Code	Description	N.B.
43	100043 7		AR		47	Coupler nut	
	100043 7			AR	40	Coupler nut	
44	+		1		47	Hydraulic pipe	
	+			1	40	Hydraulic pipe	
45	+		1		47	Hydraulic pipe	
	+			1	40	Hydraulic pipe	
46	335170 9		AR		47	Coupler nut	
	335170 9			AR	40	Coupler nut	
47	335168 4		AR		47	Ferrule	
	335168 4			AR	40	Ferrule	
48	449161 7		2		47	Adapter fitting	
	449161 7			2	40	Adapter fitting	
49	326082 1		4		47	Hose clamp	
	326082 1			4	40	Hose clamp	
50	433007 3		4		47	Clamp	
	433007 3			4	40	Clamp	
51	433100 1		2		47	Clamp bracket	
	433100 1			2	40	Clamp bracket	
52	300508 5		10		47	Hex. cap screw	
	300508 5			10	40	Hex. cap screw	
53	140015 6		10		47	Washer	
	140015 6			10	40	Washer	
54	412152 5		10		47	Hex. lock nut	
	412152 5			10	40	Hex. lock nut	
55	447513 2		1		47	Hydraulic pipe ("V" shape)	
	447513 2			1	40	Hydraulic pipe ("V" shape)	
56	412527 0		2		47	Coupler nut	
	412527 0			2	40	Coupler nut	
57	412528 2		2		47	Ferrule	
	412528 2			2	40	Ferrule	
58	447241 5		2		47	Connector fitting, straight	
	447241 5			2	40	Connector fitting, straight	
59	447406 5		1		659	Oil filter assy.	Incl. fig. 60
	455139 8		1		52	Oil filter assy.	Incl. fig. 60
	447406 5			1	419	Oil filter assy.	Incl. fig. 60
	455139 8			1	44	Oil filter assy.	Incl. fig. 60
60	447407 7		1		47	Filter, "SPIN ON" type	
	447407 7			1	40	Filter, "SPIN ON" type	
61	447240 3		1		659	Adapter fitting	
	455031 0		1		52	Adapter fitting	
	447240 3			1	419	Adapter fitting	
	455031 0			1	44	Adapter fitting	

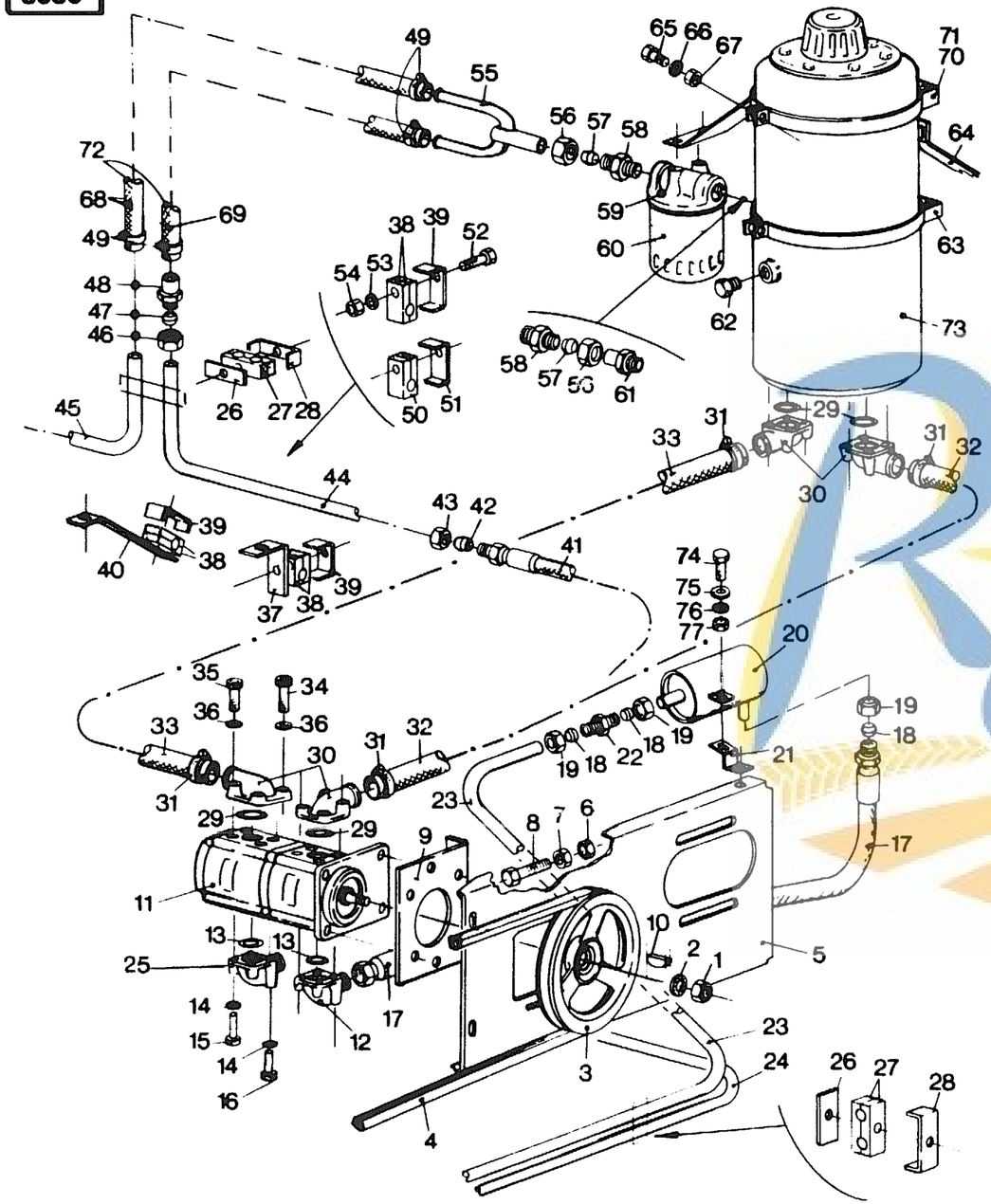

HYDRAULIC EQUIPMENT
EQUIPEMENT HYDRAULIQUE
HYDRAULISCHE AUSRÜSTUNG
IMPIANTO IDRAULICO
HYRAULISCHE UITRUSTING

Used above Serial No. 4229001 (8070)
4122001 (8080)
MODEL 8070 - 8080

Fig.	Order Ref.	CD	8070	8080	Code	Description	N.B
64	447945 7		1		47	Bracket	
	447945 7			1	40	Bracket	
65	120106 5		5		47	Hex. cap screw	
	120106 5			5	40	Hex. cap screw	
66	322358 2		5		47	Tooth lockwasher	
	322358 2			5	40	Tooth lockwasher	
67	100015 8		5		47	Hex. nut	
	100015 8			5	40	Hex. nut	
68	451558 2		1		863	Hydraulic hose	Mechanical drive
	436360 4		1		66	Hydraulic hose	Mechanical drive
	451558 2			1	623	Hydraulic hose	Mechanical drive
	436360 4			1	52	Hydraulic hose	Mechanical drive
69	451557 0		1		47	Hydraulic hose	Mechanical drive
	451557 0			1	40	Hydraulic hose	Mechanical drive
70	450329 6		1		47	Clamp	Mechanical drive
	450329 6			1	40	Clamp	Mechanical drive
71	448860 8		1		47	Clamp	Hydrostatic drive
	448860 8			1	40	Clamp	Hydrostatic drive
72	451556 8		1		47	Hydraulic hose	Hydrostatic drive
	451556 8			1	40	Hydraulic hose	Hydrostatic drive
73	449855 8		1		754	Oil reservoir assy	For details see group 35
	456478 7		1		55	Oil reservoir assy	For details see group 35
	449855 8			1	500	Oil reservoir assy	For details see group 35
	456478 7			1	47	Oil reservoir assy	For details see group 35
74	120161 1		2		47	Hex. cap screw	
	120161 1			2	40	Hex. cap screw	
75	378243 5		2		47	Plain washer	
	378243 5			2	40	Plain washer	
76	322358 2		2		47	Tooth lockwasher	
	322358 2			2	40	Tooth lockwasher	
77	100015 8		2		47	Hex. nut	
	100015 8			2	40	Hex. nut	

https://michelroger.be

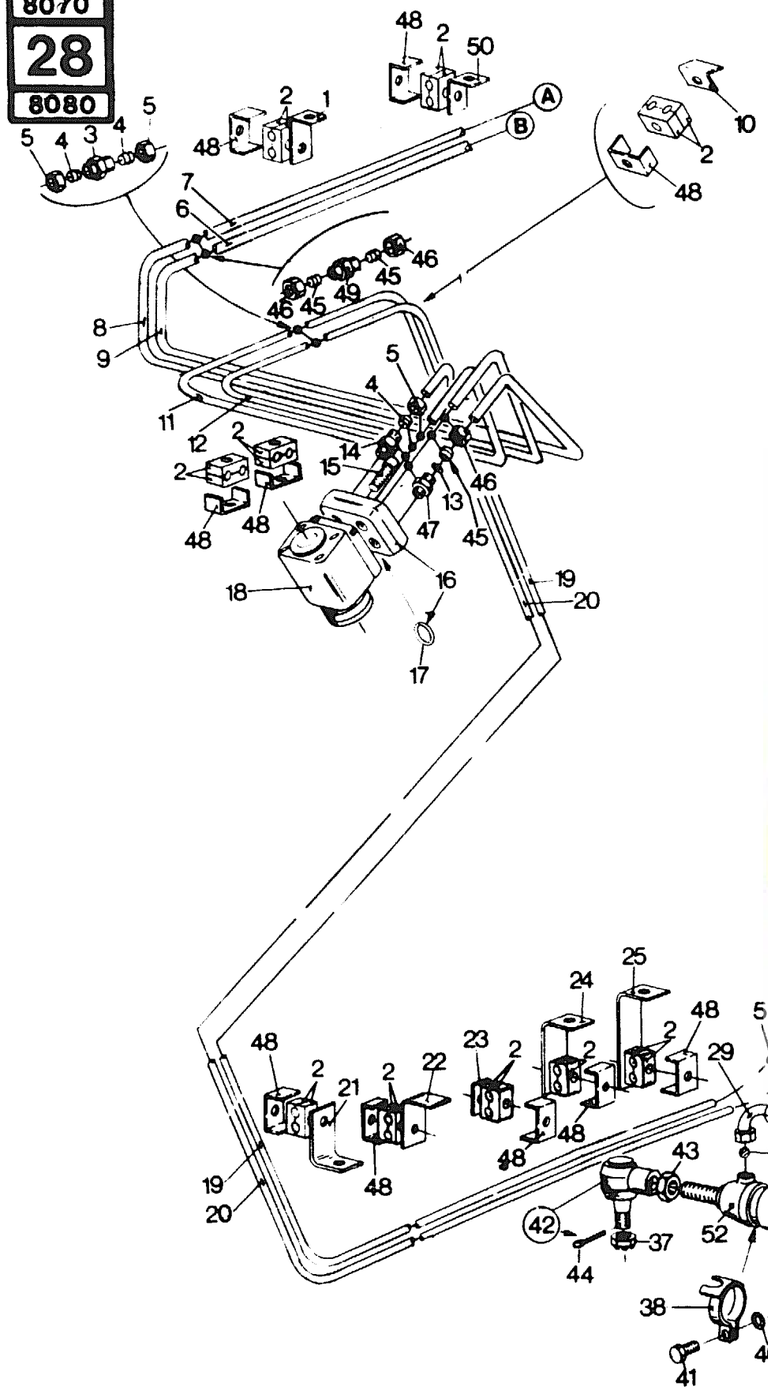

HYDRAULIC EQUIPMENT
EQUIPEMENT HYDRAULIQUE
HYDRAULISCHE AUSRÜSTUNG
IMPIANTO IDRAULICO
HYDRAULISCHE UITRUSTING

Fig.	Order Ref.	CD	8070	8080	Code	Description		N.B.
1	434110 3			2		Bracket		
2	430357 1			1		Clamp		Ø 8 — Ø 12 mm (5/16" - 15/32")
3	150017 2			2		Connector fitting, straight		
4	150014 6			2		Ferrule		
5	100042 5			2		Coupler nut		
6	+			1		Hydraulic pipe		Ø 12 mm (15/32")
7	+			1		Hydraulic pipe		Ø 12 mm (15/32")
8	+			1		Hydraulic pipe		Ø 12 mm (15/32")
9	+			1		Hydraulic pipe		Ø 12 mm (15/32")
10	434108 8			1		Plate		
11	+			1		Hydraulic pipe		Ø 10 mm (13/32")
12	+			1		Hydraulic pipe		Ø 10 mm (13/32")
13	354337 6		1		492	Orifice plate		
	354337 6			1	330	Orifice plate		
14	395019 1		4	4		Connector		
15	330308 7		2	2		Screw, socket head		
16	393133 1		1	1		Adapter block assy	0.8	Incl.figs.15 and 17
17	330309 9		1	1		"O" ring		
18	383941 2		1	1		Steering valve assy	1.4	For details see group 14
19	+		1	1		Hydraulic pipe		Ø 10 mm (13/32")
20	+		1	1		Hydraulic pipe		Ø 10 mm (13/32")
21	434095 9		1	1		Bracket		
22	434096 1			1		Bracket		
	434110 3		1			Bracket		
23	434097 3			2		Bracket		
	434103 8		1			Bracket		
24	434104 0		1	1		Bracket		
25	434105 2		1	1		Bracket		
26	430356 9		1	1		Clamp		Ø 16 — Ø 18 mm (5/8" - 25/32")
27	323597 9		1	1		Cable strap		
28	338009 1		2	2		Hydraulic hose		
29	418284 0		2	2		Elbow fitting		
30	394600 3			1		Steering cylinder assy	0.9	Incl.figs.31 and 32
	378632 0		1			Steering cylinder assy		Incl.figs. 52 ▲ and ■
31	396501 5			1		Guide bushing		
32	396503 9			1		Seal kit	2.1	
33	331209 8		1	1		Hex. nut		
34	321150 1		1	1		Ball joint assy	0.7	Incl.figs.35,36 and 37
35	325354 7		1	1		Rubber cap		
36	130008 9		1	1		Cotter pin		
37	100036 2		1	1		Hex. castle nut		

https://michelroger.be 71

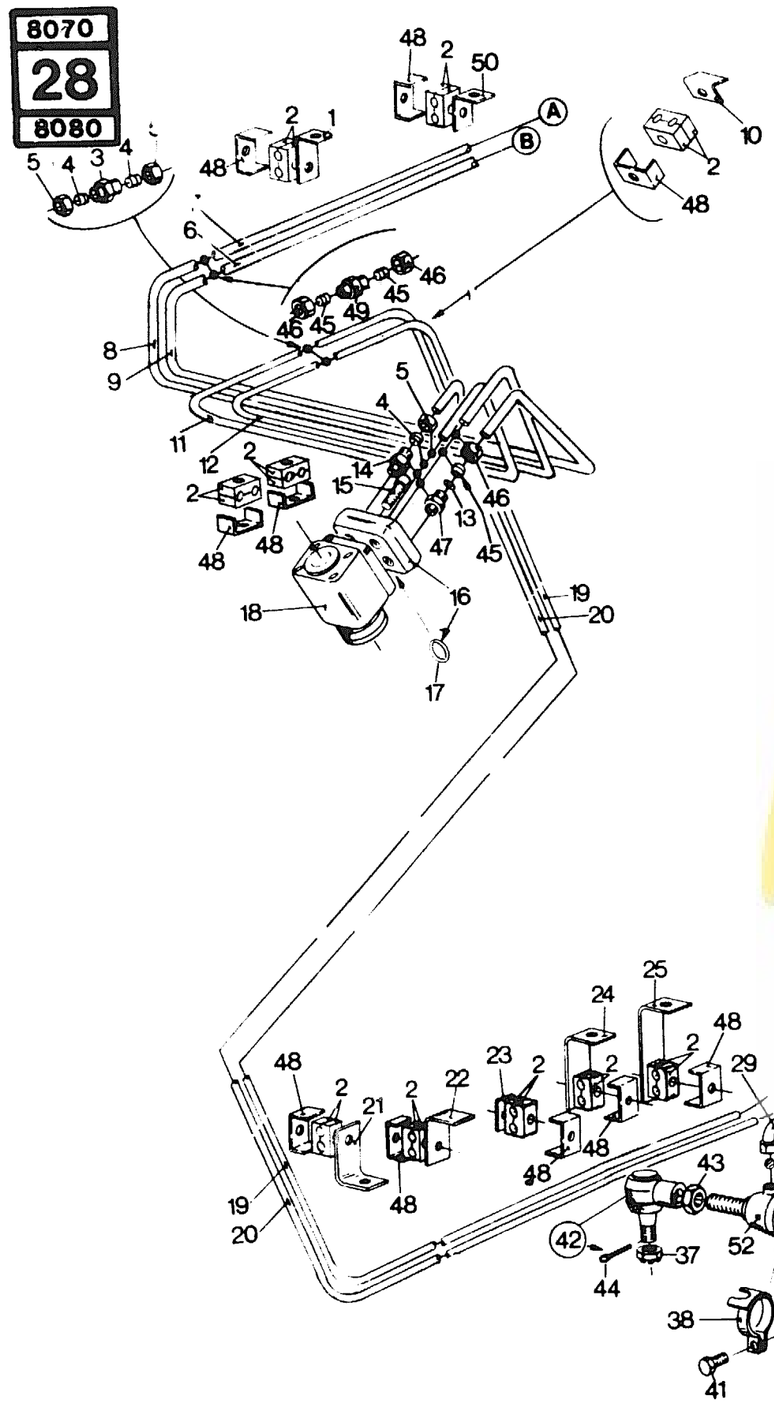

HYDRAULIC EQUIPMENT
EQUIPEMENT HYDRAULIQUE
HYDRAULISCHE AUSRÜSTUNG
IMPIANTO IDRAULICO
HYDRAULISCHE UITRUSTING

MODEL 8070 - 8080

Fig.	Order Ref.	CD	8070	8080	Code	Description	N.B
38	395444 2			1		Clamp	
	921196 3		1			Clamp	
39	100015 8		1	1		Hex. nut	
40	322358 2		1	1		Tooth lockwasher	
41	120105 3		1	1		Hex. cap screw	
42	090028 2		1	1		Ball joint assy	Incl.figs.37 and 44
43	320771 6		1	1		Hex. nut	
44	300595 8		1	1		Cotter pin	
45	150015 8		1	6		Ferrule	
46	100043 7		1	6		Coupler nut	
47	395782 8			2		Connector fitting, straignt	
48	431941 1		6	6		Bracket	
49	150018 4			2		Connector fitting, straight	
50	434110 3			1		Bracket Clamp	
51	431942 3		1	1		Bracket	
52	327454 1		1			Bushing	
▲	395928 8		1			Seal kit	
■	395924 0		1			Seal kit	

Michel Roger
ROGER

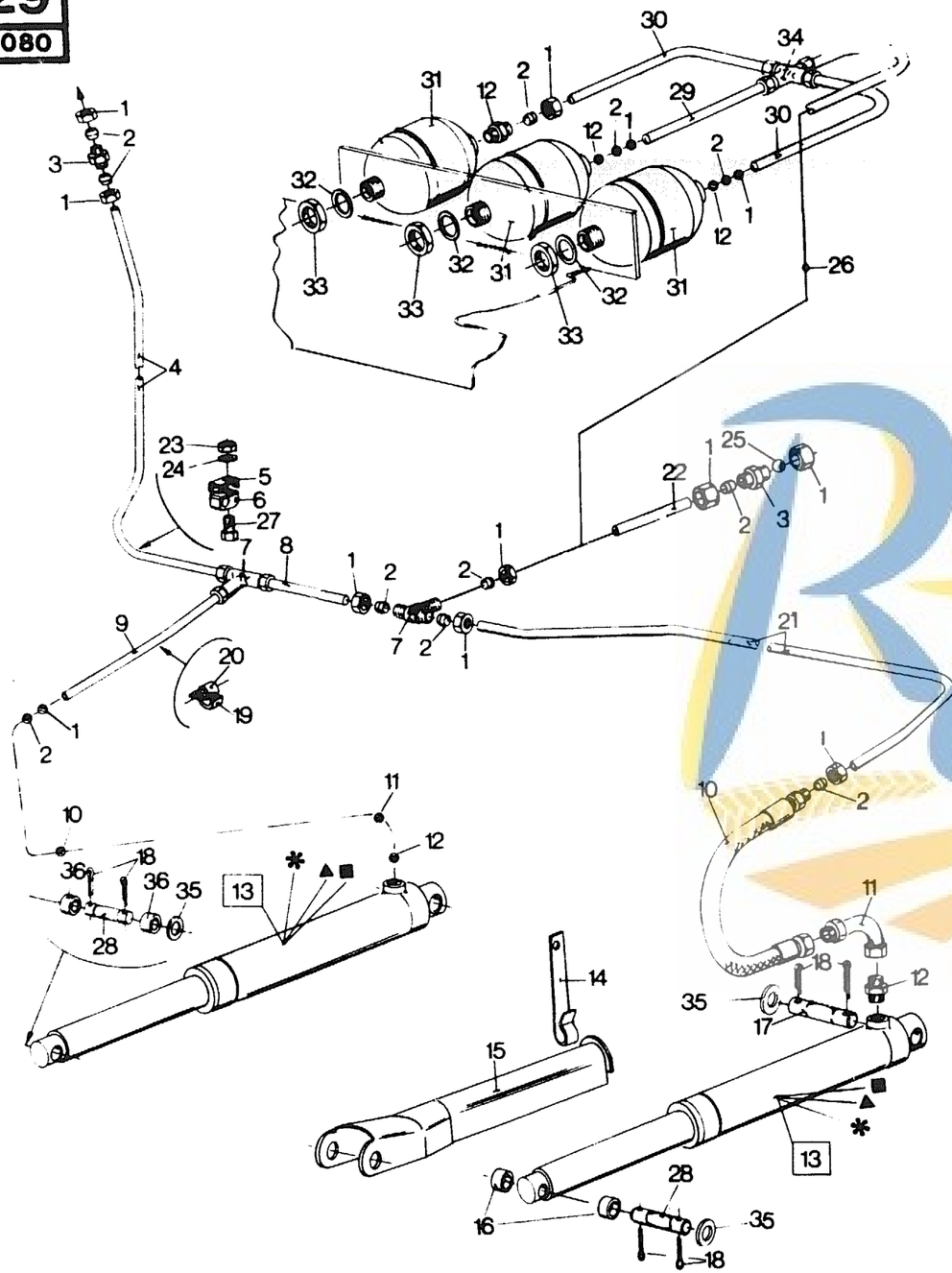

HYDRAULIC EQUIPMENT
EQUIPEMENT HYDRAULIQUE
HYDAULISCHE AUSRÜSTUNG
IMPIANTO IDRAULICO
HYDRAULISCHE UITRUSTING

MODEL 8070 - 8080

Fig.	Order Ref.	CD	8070	8080	Code	Description		N.B
1	100043 7		15	15		Coupler nut		
2	150015 8		15	15		Ferrule		
3	150018 4		1	1		Connector fitting, straight		
4	+		1	1		Hydraulic pipe		Ø 12 mm (15/32")
5	442340 0		1	1		Clamp bracket		
6	433008 5		2	2		Clamp		Ø 8 – Ø 12 mm (5/16" - 15/32")
7	150019 6		2	2		"T" fitting		
8	+		1	1		Hydraulic pipe		Ø 12 mm (15/32")
9	+		1	1		Hydraulic pipe		Ø 12 mm (15/32")
10	160164 5		2	2		Hydraulic hose		
11	9508529 7		2	2		Elbow fitting		
12	395782 8		3	3		Connector fitting, straight		
13	421869 5		2	2		Cylinder, Header lift	0.5	Incl.fig. ★ Bosch
			2	2		Cylinder, Header lift		Incl. figs. ▲ and ■ – Weber
14	332672 0		1	1		Spring clip		
15	354679 0		1	1		Safety latch		
16	332673 2			2		Spacer ring		
	321603 2		2			Spacer ring		
17	426933 7		2	2		Pivot pin		
18	130014 2		8	8		Cotter pin		
19	323771 9		2	2		Clamp		
20	323206 2		2	2		Protection		
21	+		1	1		Hydraulic pipe		Ø 12 mm (15/32")
22	+		1	1		Hydraulic pipe		Ø 12 mm (15/32")
								For shipping purposes only
23	412152 5		1	1		Hex. lock nut		
24	140015 6		1	1		Plain washer		
25	210006 2		1	1		Steel ball		For shipping purposes only
26	+		1	1		Hydraulic pipe		Ø 12 mm (15/32")
27	300508 5		1	1		Hex. cap screw		
28	426932 5		2	2		Pivot pin		
29	+		1	1		Hydraulic pipe		Ø 12 mm (15/32")
30	+		1	1		Hydraulic pipe		Ø 12 mm (15/32")
31	398262 9		3			Accumulator		For 11 ft. header
	456524 6		4		55	Accumulator		For 11 ft. header – France only
	398264 3		3			Accumulator		For 12 ft. header
	456524 6		4		55	Accumulator		For 12 ft. header – France only
	398266 7		3			Accumulator	0.7	For 13 ft. header
	456528 4		4		55	Accumulator		For 13 ft. header – France only
	398266 7			3		Accumulator		For 13 ft. header

https://michelroger.be 73

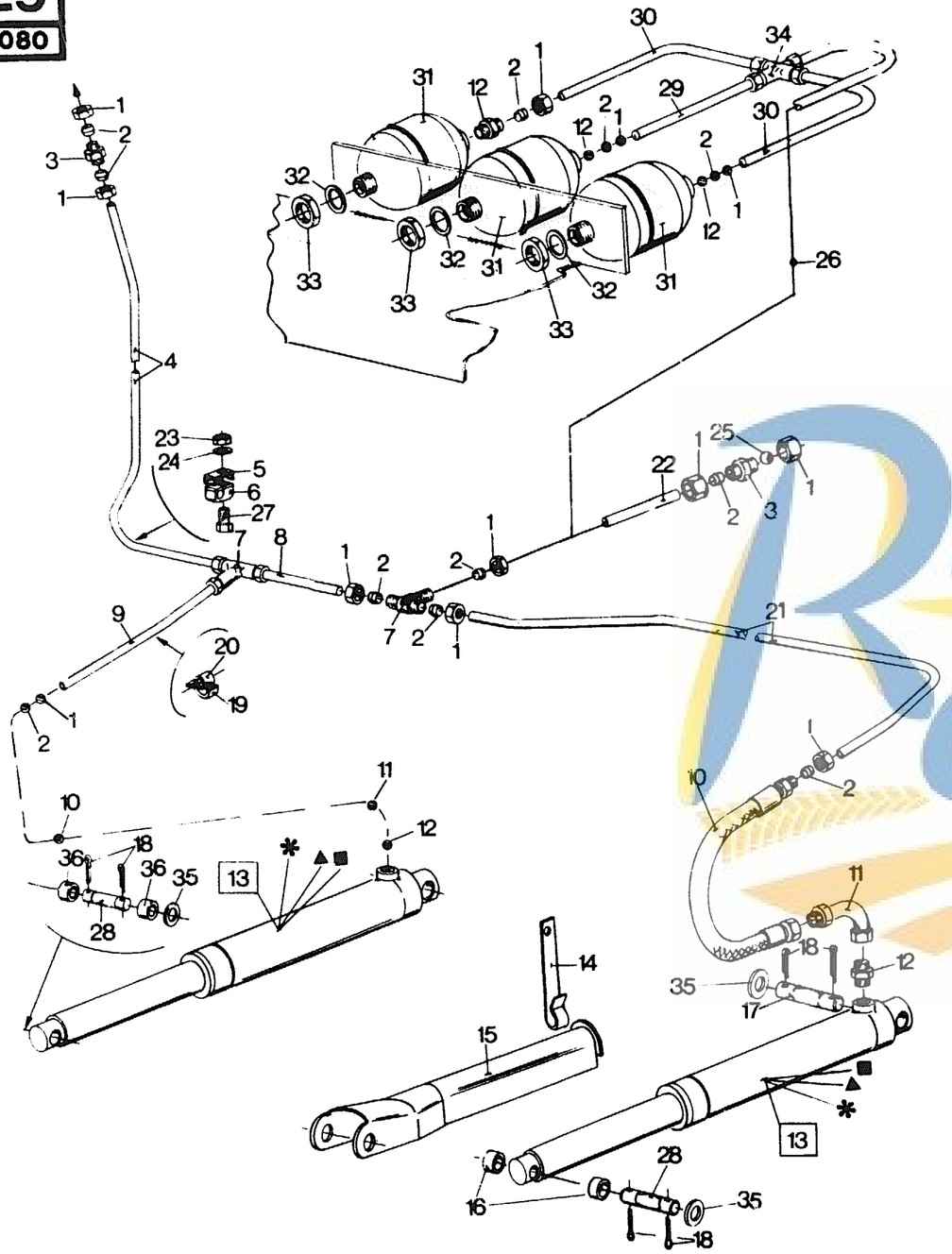

HYDRAULIC EQUIPMENT
EQUIPEMENT HYDRAULIQUE
HYDRAULISCHE AUSRÜSTUNG
IMPIANTO IDRAULICO
HYDRAULISCHE UITRUSTING

MODEL 8070 - 8080

Fig.	Order Ref.	CD	8070	8080	Code	Description	N.B.
31	456528 4			4	47	Accumulator	For 13 ft. header — France only
	398267 9		3			Accumulator	For 15 ft. header
	456527 2		4		55	Accumulator	For 15 ft. header — France only
	398267 9			3		Accumulator	For 15 ft. header
	456527 2			4	47	Accumulator	For 15 ft. header — France only
	398269 3		3			Accumulator	For 17 ft. header
	456526 0		4		55	Accumulator	For 17 ft. header — France only
	398269 3			3		Accumulator	For 17 ft. header
	456526 0			4	47	Accumulator	For 17 ft. header — France only
	398270 6		3			Accumulator	For 20 ft. header
	456525 8		4		55	Accumulator	For 20 ft. header — France only
	398270 6			3		Accumulator	For 20 ft. header
	456525 8			4	47	Accumulator	For 20 ft. header — France only
	398271 8		3			Accumulator	For 22 ft. header
	456472 5		4			Accumulator	For 22 ft. header — France only
	398271 8			3		Accumulator	For 22 ft. header
	456472 5			4		Accumulator	For 22 ft. header — France only
32	140110 8		3	3		Plain washer	
33	308823 1		3	3		Hex. nut	
34	410624 4		1	1		"X" fitting	
35	140103 3		AR	AR		Plain washer	
36	321603 2			2		Spacer ring	
	332673 2			2		Spacer ring	
*	395925 2		1	1		Seal kit	Bosch
▲	439288 3		1	1		Seal kit	Weber
■	439289 5		1	1		Kit, Cylinder overhaul	Weber

https://michelroger.be 74

30 ➧ 36

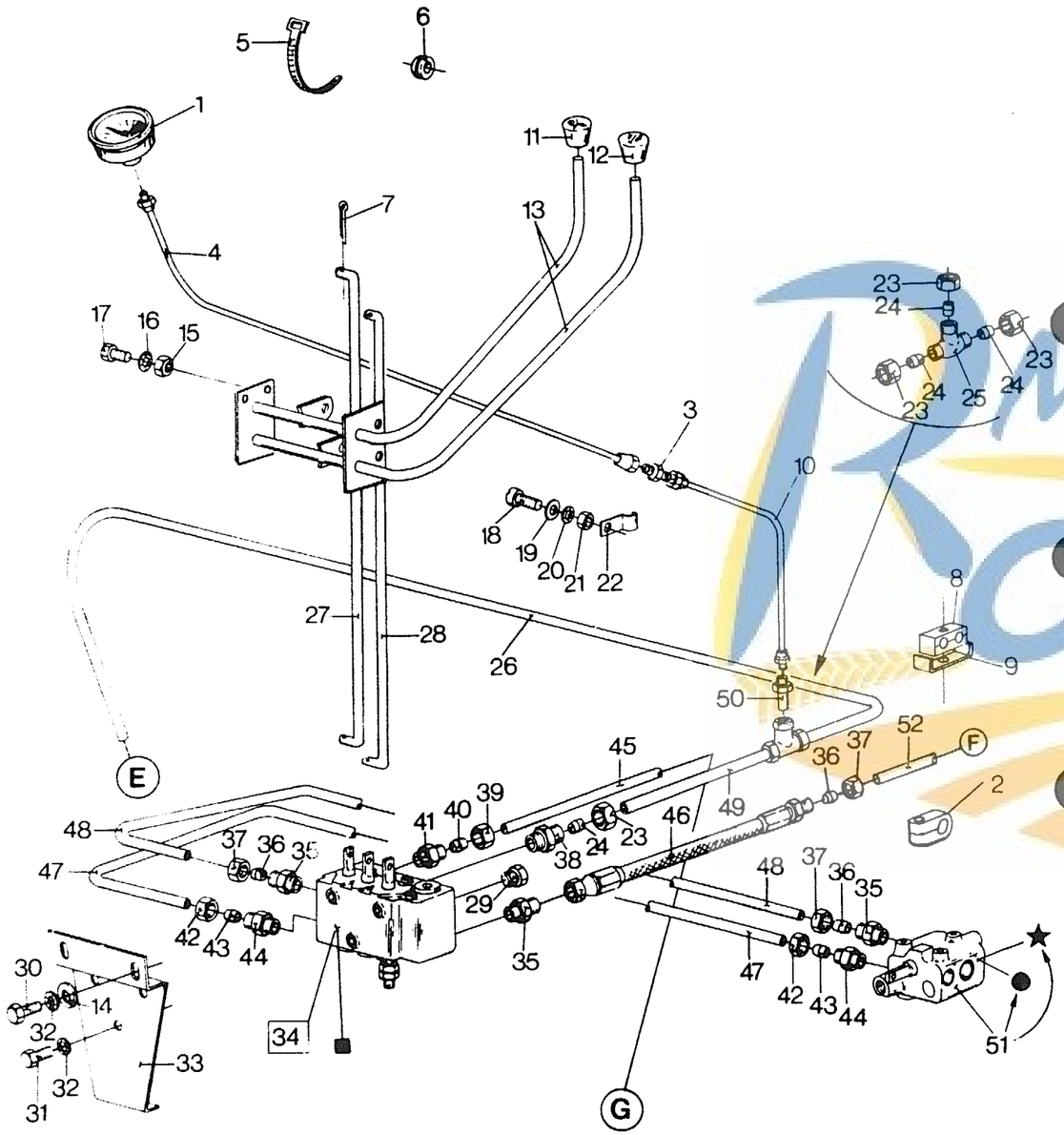

HYDRAULIC EQUIPMENT
EQUIPEMENT HYDRAULIQUE
HYDRAULISCHE AUSRÜSTUNG
IMPIANTO IDRAULICO
HYDRAULISCHE UITRUSTING

MODEL 8070 - 8080

Fig.	Order Ref.	CD	8070	8080	Code	Description		N.B
1	432907 0			1		Pressure gauge	0.4	
2	433097 2		4	4		Clamp		Ø 16 – Ø 18 mm (5//8" - 25/32")
3	336722 1		1	1		Hex. nut		
4	432992 9		1	1		Oil line		
5	323597 9		1	1		Cable strap		
6	399986 4		1	1		Rubber grommet		
7	130002 7		4	4		Cotter pin		
8	430357 1		1	1		Clamp		Ø 8 – Ø 12 mm (5/16" - 15/32")
9	431941 1		6	6		Clamp bracket		
10	432993 1		1	1		Hydraulic pipe		
11	322507 9		1	1		Knob	0.3	
12	322506 7		1	1		Knob		
13	432819 3		1	1		Control lever		Hydrostatic drive
	429789 3		1	1		Control lever		Mechanical drive
14	378243 5		3	3		Plain washer		
15	100014 6		2	2		Hex. nut		
16	322357 0		2	2		Tooth lockwasher		
17	300506 1		2	2		Hex. cap screw		
18	120007 5		5	5		Machine screw		
19	140013 2		5	5		Plain washer		
20	322355 6		5	5		Tooth lockwasher		
21	100012 2		4	4		Hex. nut		
22	336748 5		5	5		Clamp		
23	100043 7		AR	AR		Coupler nut		
24	150015 8		AR	AR		Ferrule		
25	150019 6		1	1		"T" fitting		
26	+		1	1		Hydraulic pipe		Ø 12 mm (15/32")
27	422348 2		1	1		Connecting rod		
28	422350 7		1	1		Connecting rod		
29	417006 1		1	1		Plug		
30	120104 1		3	3		Hex. cap screw		
31	120161 1		10	10		Hex. cap screw		
32	322358 2		6	6		Tooth lockwasher		
33	417269 7		1	1		Mounting plate		
34	399117 3			1	609	Valve assy, main hydraulic control (Triple spool)	4.1	For details see group 34
	399117 3		1		852	Valve assy, main hydraulic control (Triple spool)	4.1	
	916529 3		1		65	Valve assy, main hydraulic control (Triple spool)	4.1	Incl. fig. ■
	916529 3			1	51	Valve assy, main hydraulic control (Triple spool)		Incl. fig. ■

https://michelroger.be 76

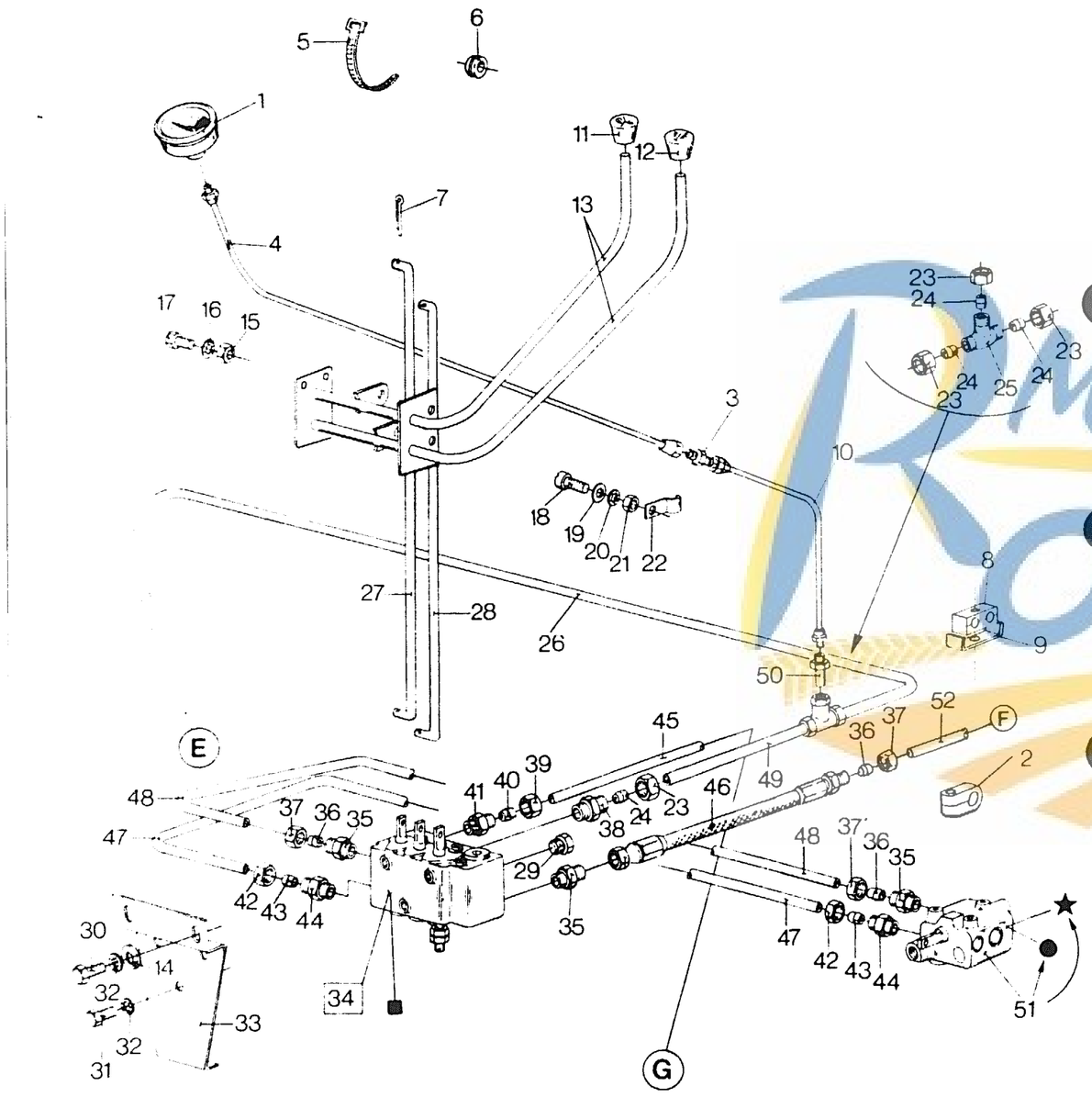

HYDRAULIC EQUIPMENT
EQUIPEMENT HYDRAULIQUE
HYDRAULISCHE AUSRÜSTUNG
IMPIANTO IDRAULICO
HYDRAULISCHE UITRUSTING

MODEL 8070 - 8080

Fig.	Order Ref.	CD	8070	8080	Code	Description		N.B
31	120161 1		10	10		Hex. cap screw		
32	322358 2		6	6		Tooth lockwasher		
33	417269 7		1	1		Mounting plate		
34	399117 3			1	609	Valve assy, Main hydraulic control (Triple spool)	4.1	For details see group 34
	399117 3		1		852	Valve assy, Main hydraulic control (Triple spool)	4.1	For details see group 34
	916529 3		1		65	Valve assy, Main hydraulic control (Triple spool)	4.1	Incl. fig. ■
	916529 3			1	51	Valve assy, Main hydraulic control (Triple spool)	4.1	Incl. fig. ■
35	394372 8		2	2		Connector fitting, straight		
36	335169 6		2	2		Ferrule		
37	335171 1		2	2		Coupler nut		
38	395782 8		1	1		Connector fitting, straight		
39	335135 5		AR	AR		Coupler nut		
40	335136 7		AR	AR		Ferrule		
41	386215 6		3	3		Connector fitting, straight		
42	335170 9		3	3		Coupler nut		
43	335168 4		3	3		Ferrule		
44	394373 0		3	3		Connector fitting, straight		
45	+		1	1		Hydraulic pipe		Ø 8 mm (5/16")
46	433108 7		1	1		Hydraulic hose		
47	+			1		Hydraulic pipe		Ø 18 mm (25/32")
48	+			1		Hydraulic pipe		Ø 16 mm (5/8")
49	+			1		Hydraulic pipe		Ø 12 mm (15/32")
50	396323 7		1	1		Connecting pipe		
51	379663 6		1	1		Valve assy, Hydraulic control (Single spool)	1.4	Incl. figs. ★ and ●
52	+			1		Hydraulic pipe		Ø 16 mm (5/8")
★	388775 4		1	1		Seal kit		
●	388776 6		1	1		Seal kit		
■	754530 0		1	1	51	Seal kit		
	754530 0		1		65	Seal kit		

ROGER

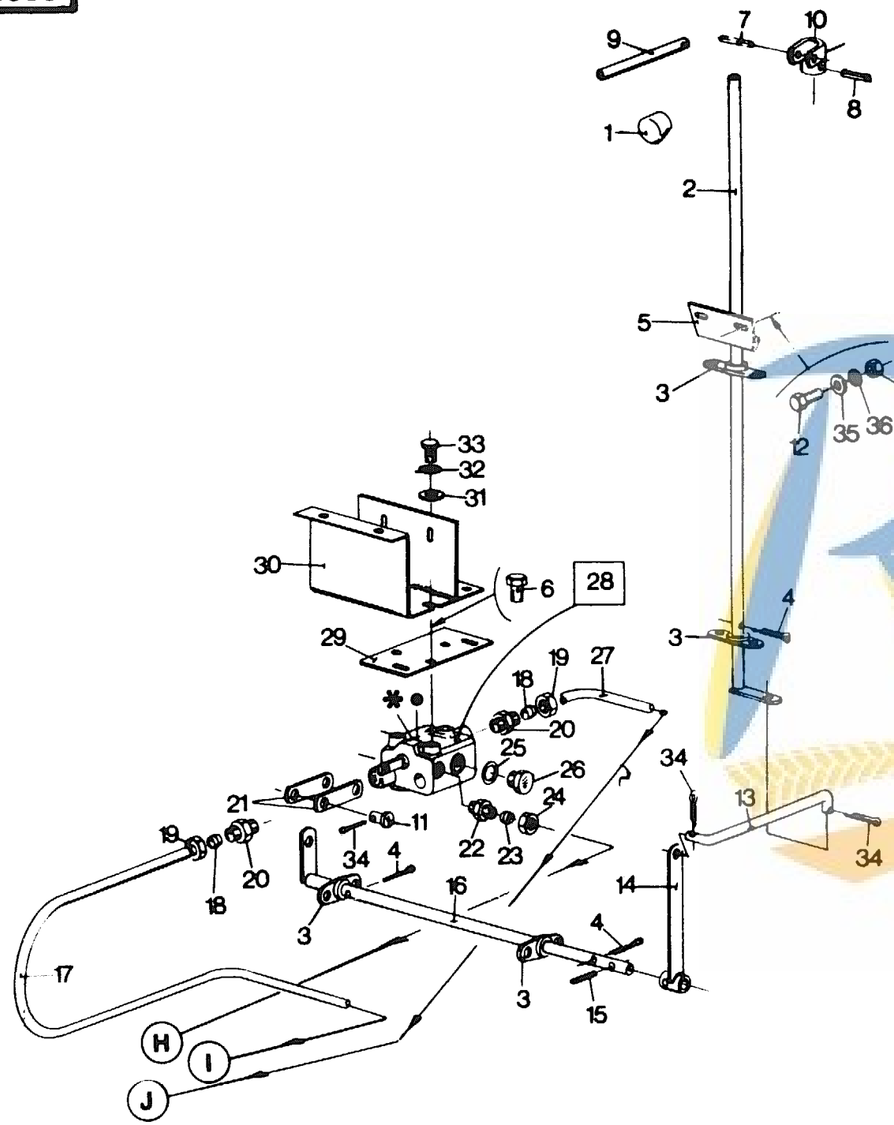

HYDRAULIC EQUIPMENT
EQUIPEMENT HYDRAULIQUE
HYDRAULISCHE AUSRÜSTUNG
IMPIANTO IDRAULICO
HYDRAULISCHE UITRUSTING

MODEL 8070 - 8080

Fig.	Order Ref.	CD	8070	8080	Code	Description	N.B.
1	410278 9		1	1		Knob	
2	427454 2		1	1		Control rod	
3	334707 7		4	4		Bearing	
4	130007 7		2	2		Cotter pin	
5	389285 6		1	1		Plate	
6	300380 3		3	3		Hex. cap screw	
7	379543 2		1	1		Roll pin	
8	130043 3		1	1		Roll pin	
9	427453 0		1		848	Handle	
	753271 9		1		64	Handle	
	427453 0			1	609	Handle	
	753271 9			1	51	Handle	
10	430575 3		1		848	Hinge piece	
	753272 1		1		64	Hinge piece	
	430575 3			1	609	Hinge piece	
	753272 1			1	51	Hinge piece	
11	385818 3		2		492	Clevis pin	
	385818 3			2	330	Clevis pin	
	374834 4		2		47	Hex. cap screw	
	374834 4			2	40	Hex. cap screw	
12	120099 8		2	2		Hex. cap screw	
13	432805 4		1	1		Connecting rod	
14	389301 2		1	1		Lever	
15	130045 7		1	1		Roll pin	
16	389304 8		1	1		Lever	
17	+		1	1		Hydraulic pipe	
18	335136 7		AR	AR		Ferrule	
19	335135 5		AR	AR		Coupler nut	
20	386215 6		3	3		Connector	
21	388650 0		2	2		Connecting link	
22	394373 0		3	3		Connector fitting, straight	
23	335168 4		3	3		Ferrule	
24	335170 9		3	3		Coupler nut	
25	220022 8		1	1		Seal washer	
26	387512 7		1	1		Plug	
27	+		1	1		Hydraulic pipe	Ø 8 mm (5/16")
28	379663 6		1	1	1.4	Valve assy, Hydraulic control (Single spool)	Incl.figs. ✱ and ●
29	385754 7		1	1		Mounting plate	
30	389295 7		1	1		Support	
31	378243 5		2	2		Plain washer	
32	322358 2		2	2		Tooth lockwasher	

https://michelroger.be 78

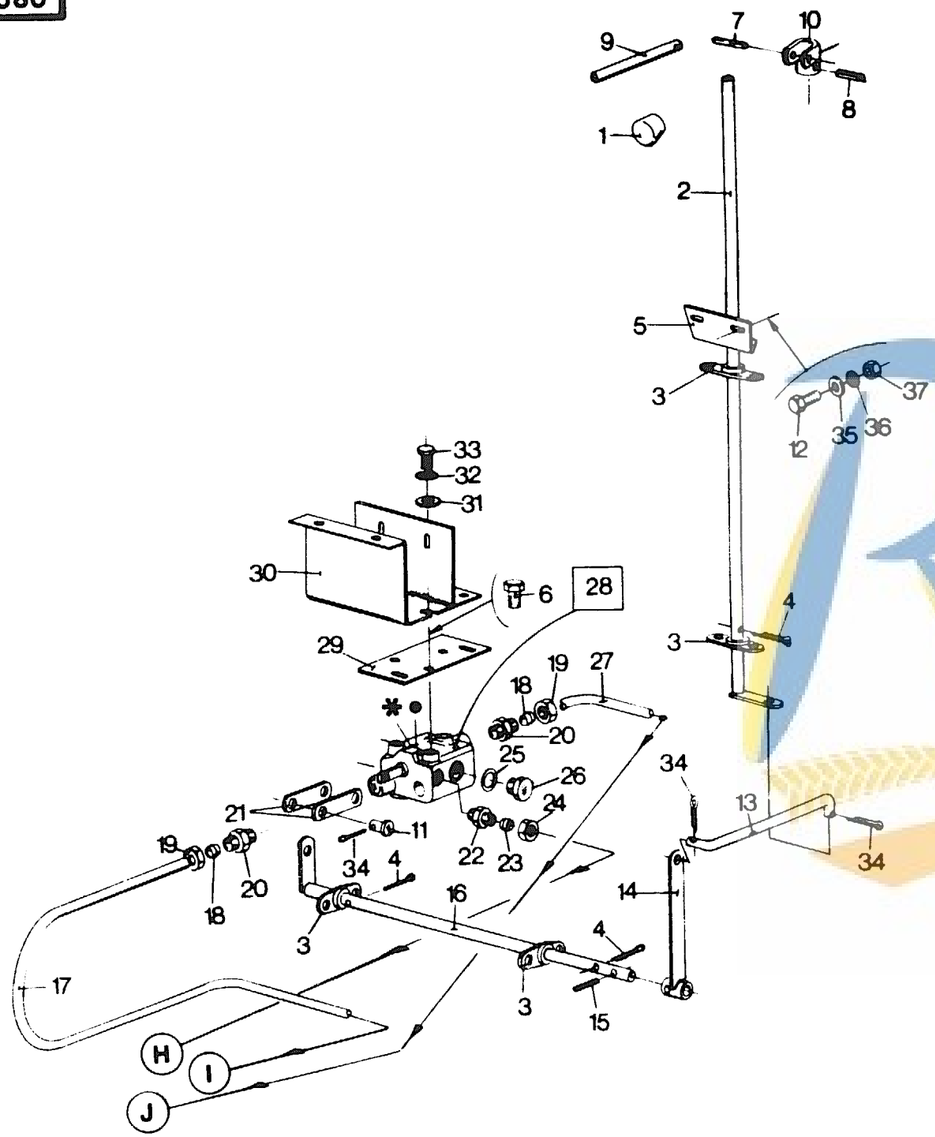

HYDRAULIC EQUIPMENT
EQUIPEMENT HYDRAULIQUE
HYDRAULISCHE AUSRÜSTUNG
IMPIANTO IDRAULICO
HYDRAULISCHE UITRUSTING

MODEL 8070 - 8080

Fig.	Order Ref.	CD	8070	8080	Code	Description	N.B.
33	120104 1		2	2		Hex. cap screw	
34	130002 7		3	3		Cotter pin	
35	140015 6		2	2		Plain washer	
36	322357 0		2	2		Tooth lockwasher	
37	100014 6		2	2		Hex. nut	
*	388775 4		1	1		Seal kit	
●	388776 6		1	1		Repair kit	

Michel ROGER

https://michelroger.be 79

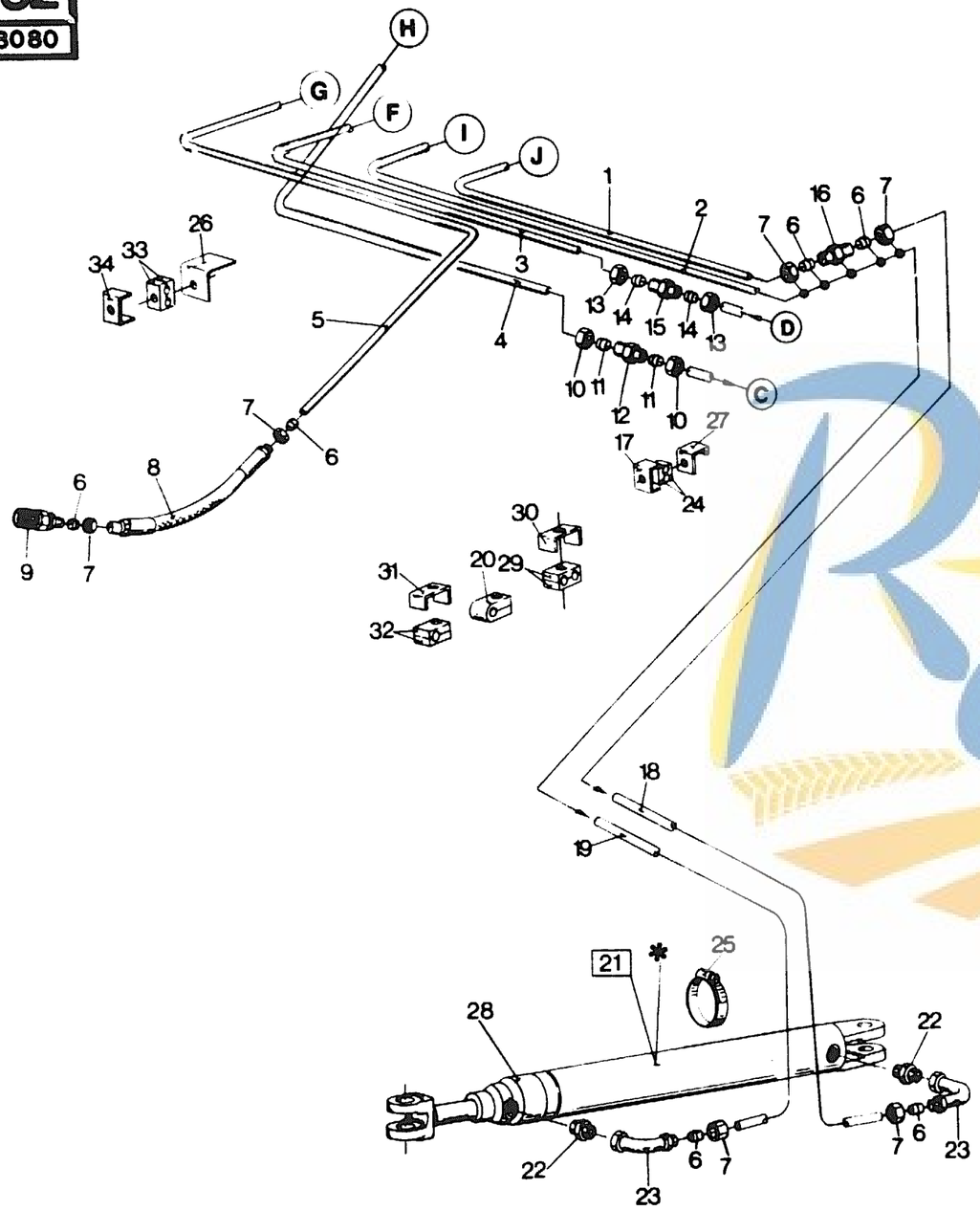

Fig.	Order Ref.	CD	8070	8080	Code	Description	N.B	
1	+		1	1		Hydraulic pipe		Ø 8 mm (5/16")
2	+		1	1		Hydraulic pipe		Ø 8 mm (5/16")
3	+		1	1		Hydraulic pipe		Ø16 mm (5/8")
4	+		1	1		Hydraulic pipe		Ø18 mm (25/32")
5	+		1	1		Hydraulic pipe		Ø 8 mm (5/16")
6	335136	7	AR	AR		Ferrule		
7	335135	5	AR	AR		Coupler nut		
8	424525	0	1	1		Hydr. hose	0.5	
9	362452	0	1		745	Coupling		
	456012	1	1		55	Coupling		
	362452	0		1	491	Coupling		
	456012	1		1	47	Coupling		
10	335170	9	3	3		Coupler nut		
11	335168	4	3	3		Ferrule		
12	335173	5	2	2		Connector fitting, straight		
13	335171	1	2	2		Coupler nut		
14	335169	6	2	2		Ferrule		
15	335174	7	2	2		Connector fitting, straight		
16	335172	3	2	2		Connector fitting, straight		
17	431942	3	1	1		Clamp bracket		
18	+		1	1		Hydraulic pipe		Ø 8 mm (5/16")
19	+		1	1		Hydraulic pipe		Ø 8 mm (5/16")
20	433097	2	2	2		Clamp		
21	410445	4	1	1	848	Hydraulic cylinder	1.4	Incl.figs.28 and *
	410445	**4**	1	1	609	Hydraulic cylinder	1.4	Incl.figs.28 and *
	452114	**3**	1		64	Hydraulic cylinder	1.4	Incl.figs.28 and *
	452114	**3**		1	51	Hydraulic cylinder	1.4	Incl.figs.28 and *
22	419095	0	2	2		Connector fitting, straight		
23	418283	8	2		850	Elbow fitting		
	418283	8		2	611	Elbow fitting		
24	430356	9	2	2		Clamp		
25	360747	3	1	1		Clamp		
26	434008	6	1	1		Bracket		
27	417313	2	1	1		Bracket		
28	423967	5	1	1		Bushing		
29	430357	1	4	4		Clamp		Ø 8 – Ø12 mm (5/16" - 15/32")
30	431941	1	2	2		Clamp bracket		
31	433101	3	4	4		Clamp bracket		
32	433008	5	4	4		Clamp		Ø 8 – Ø12 mm (5/16" - 15/32")
33	433553	0	2	2		Clamp		Ø16 – Ø18 mm (5/8" - 25/32")
34	433554	2	1	1		Clamp bracket		
*	422379	7	1	1	609	Seal kit		
*	**422379**	**7**	1	1	848	Seal kit		
*	**9508805**		1	1	64	Seal kit		

https://michelroger.be 80

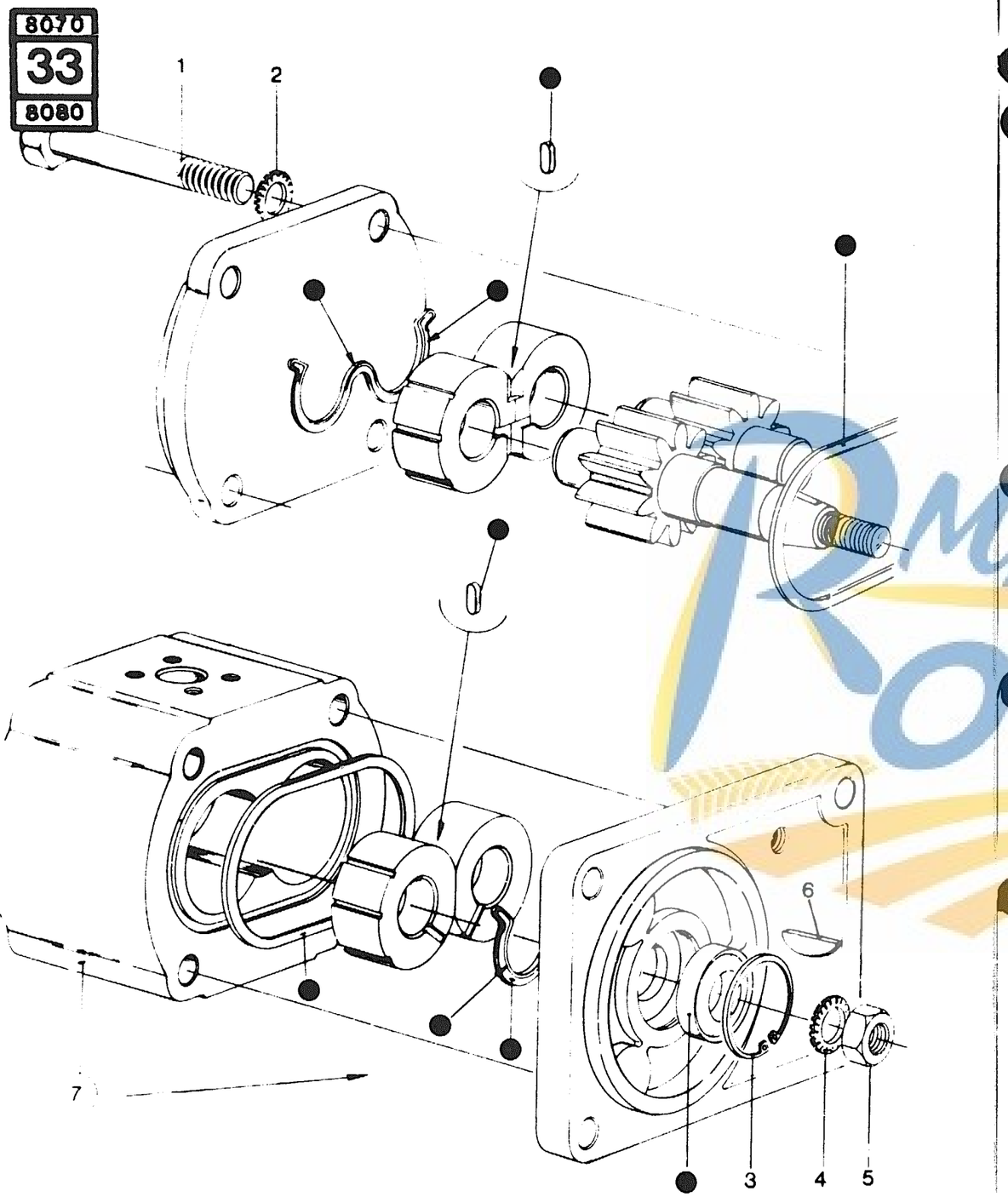

HYDRAULIC PUMP
POMPE HYDRAULIQUE
HYDRAULIKPUMPE
POMPA IDRAULICA
HYDRAULISCHE POMP

SINGLE

Used from Serial No. 4214001 - 4228999 (8070)
4113001 - 4121999 (8080)

MODEL 8070 - 8080

Fig.	Order Ref.	CD	8070	8080	Code	Description		N.B.
1	355690 5		4		492	Hex. cap screw		
	355690 5			4	330	Hex. cap screw		
2	140045 9		4		492	Tooth lockwasher		
	140045 9			4	330	Tooth lockwasher		
3	355687 8		1		492	Circlip		
	355687 8			1	330	Circlip		
4	140046 1		1		492	Tooth lockwasher		
	140046 1			1	330	Tooth lockwasher		
5	322589 1		1		492	Hex. jam nut		
	322589 1			1	330	Hex. jam nut		
6	388250 2		1		492	Woodruff key		
	388250 2			1	330	Woodruff key		
7	387505 2		1		492	Hydraulic pump assy	1.4	Incl. figs. 1 to 6 and ●
	387505 2			1	330	Hydraulic pump assy	1.4	Incl. figs. 1 to 6 and ●
●	387506 4		1		492	Seal kit	1.7	
	387506 4			1	330	Seal kit		

https://michelroger.be 81

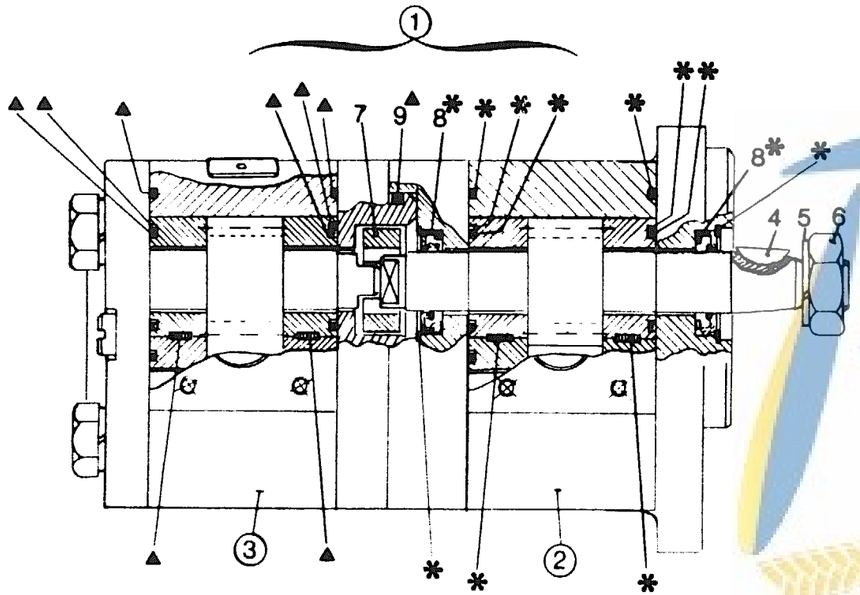

HYDRAULIC PUMP
POMPE HYDRAULIQUE
HYDRAULIKPUMPE
POMPA IDRAULICA
HYDRAULISCHE POMP

DOUBLE

Used from and above Serial no. 4229001 - (8070)
Serial no. 4122001 - (8080)

MODEL 8070 - 8080

Fig.	Order Ref.	CD	8070	8080	Code	Description	N.B.
1	447288 3		1		47	Hydraulic pump assy	Incl. all figs.
	447288 3			1	40	Hydraulic pump assy	Incl. all figs.
2	421135 0		1		47	Hydr. pump assy (front)	Incl. 4,5,6,8 and *
	421135 0			1	40	Hydr. pump assy(front)	Incl. figs. 4,5,6,8 and *
3	451271 4		1		47	Hydr. pump assy (rear)	Incl. figs. 7,9 and ▲
	451271 4			1	40	Hydr. pump assy (rear)	Incl. figs. 7,9 and ▲
4	388250 2		1		850	Woodruff key	
	336424 9		1		60	Woodruff key	
	388250 2			1	610	Woodruff key	
	336424 9			1	55	Woodruff key	
5	140046 1		1		47	Tooth lockwasher	
	140046 1			1	40	Tooth lockwasher	
6	322589 1		1		47	Hex jam nut	
	322589 1			1	40	Hex jam nut	
7	418848 6		1		47	Disc	
	418848 6			1	40	Disc	
8	418846 2		1		47	Seal ring	
	418846 2			1	40	Seal ring	
9	327187 4		1		47	Seal ring	
	327187 4			1	40	Seal ring	
*	387506 4		1		47	Seal kit	Pump front
	387506 4			1	40	Seal kit	Pump front
▲	418849 8		1		47	Seal kit	Pump rear
	418849 8			1	40	Seal kit	Pump rear

https://michelroger.be 82

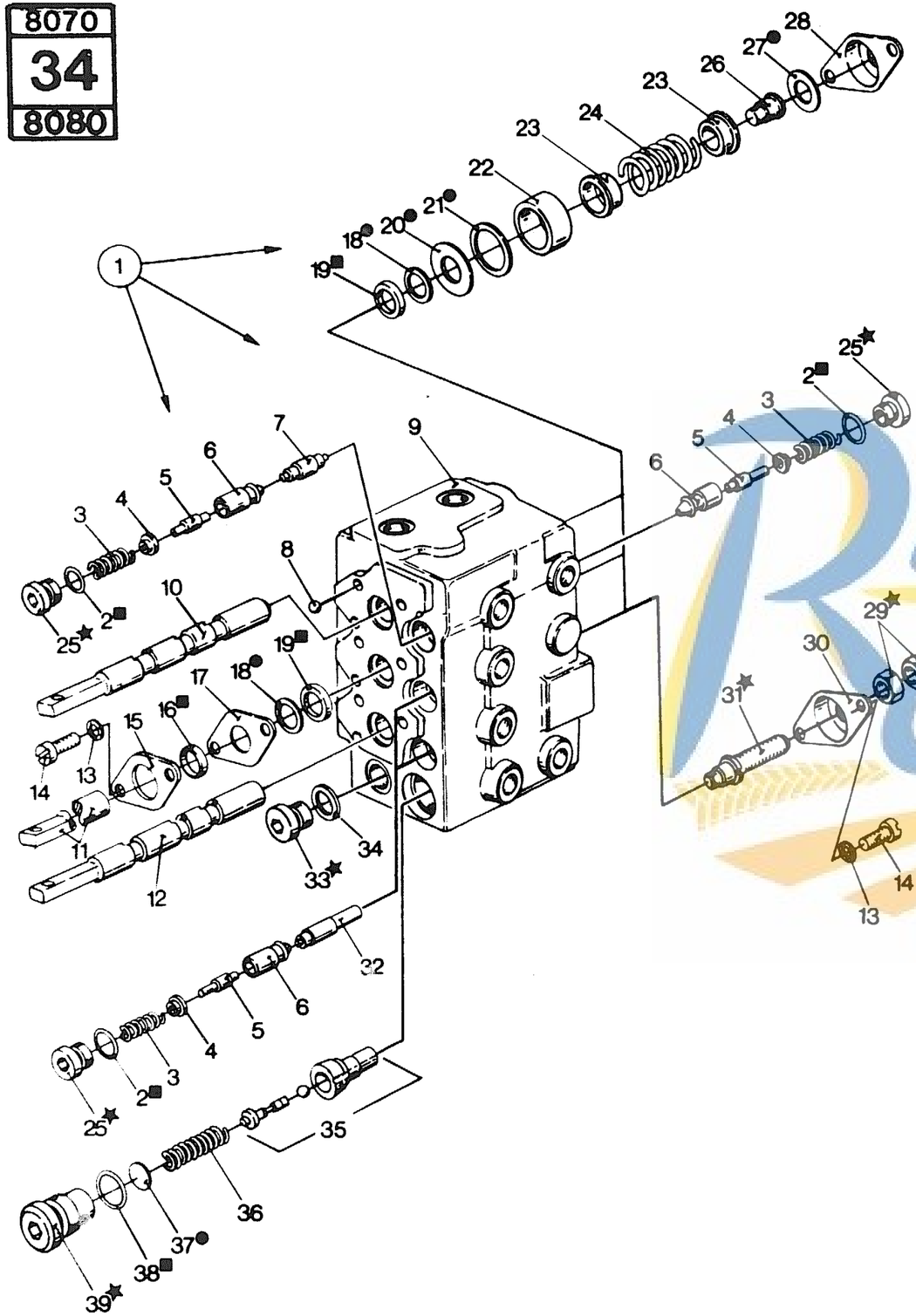

HYDRAULIC VALVE — TRIPLE SPOOL
VALVE HYDRAULIQUE — TRIPLE
STEUERVENTIL — DREIFACHWIRKEND
DISTRIBUTORE IDRAULICO TRIPLO
DRIEDELIG HYDRAULISCHE BESTURINGSVENTIEL

Used on and below Serial No. 4132999 (8080)
4246999 (8070)
MODEL 8070 - 8080

Fig.	Order Ref.	CD	8070	8080	Code	Description	N.B.	
1	399117 3		1	1		Valve assy, Main hydraulic control	4.1	Incl. all items
2	NSS		4	4		"O" ring		
3	426492 1		4	4		Spring		
4	NSS		4	4		Spacer		
5	426489 4		4	4		Plunger		
6	426490 7		4	4		Taper valve		
7	NSS		1	1		Plunger		
8	426494 5		6	6		Ball		
9	NSS		1	1		Valve housing		
10	NSS		1	1		Spool		
11	NSS		1	1		Spool		
12	NSS		1	1		Spool		
13	332660 5		12	12		Tooth lockwasher		
14	412133 5		12	12		Hex. cap screw		
15	NSS		3	3		Plate		
16	NSS		3	3		Seal washer		
17	NSS		3	3		Plate		
18	NSS		6	6		Spacer ring		
19	NSS		6	6		Seal washer		
20	NSS		3	3		Washer		
21	NSS		AR	AR		Washer		
22	NSS		3	3		Spacer		
23	NSS		6	6		Spring holder		
24	355604 4		3	3		Spring		
25	NSS		4	4		Plug		
26	426491 9		3	3		Screw		
27	NSS		3	3		Washer		
28	NSS		2	2		Cover		
29	100017 2		2	2		Hex. nut		
30	NSS		1	1		Cover		
31	426498 3		1	1		Adjusting rod	0.5	
32	NSS		2	2		Plunger		
33	NSS		1	1		Plug		
34	220050 7		2	2		"O" ring		
35	426482 2		1	1		Relief valve	0.5	
36	180087 5		1	1		Spring		
37	NSS		AR	AR		Shim		
38	NSS		1	1		"O" ring		
39	NSS		1	1		Plug		
*	426497 1		1	1		Parts kit		Incl.figs.25,29,31,33 and 39
●	426496 9		1	1		Parts kit		Incl.figs.18,20,21,27 and 37
■	447026 9		1	1		Seal kit		Incl.figs.2,16,19 and 38

https://michelroger.be 83

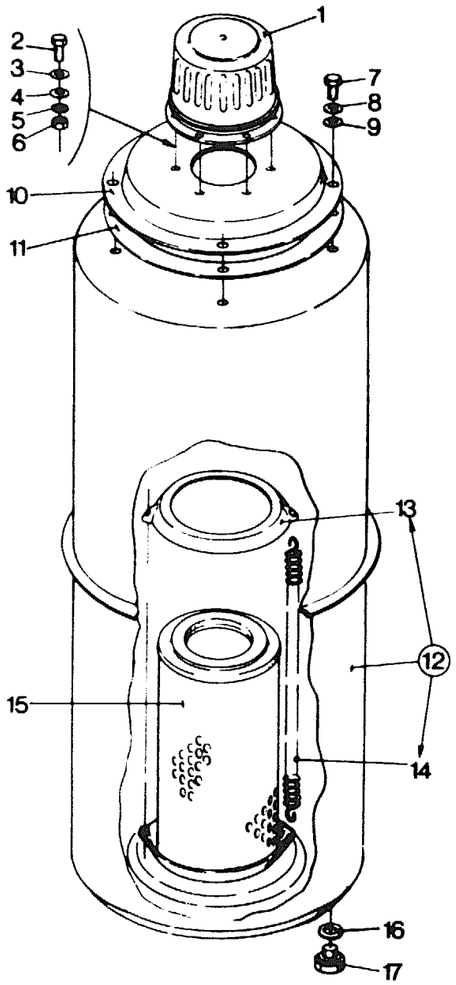

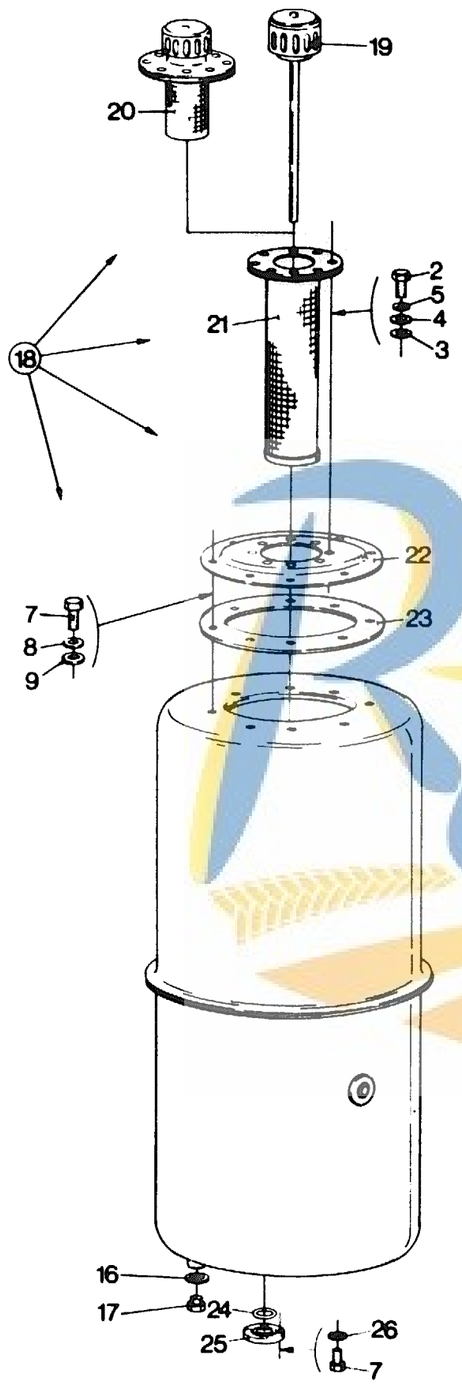

HYDRAULIC OIL RESERVOIR
RESERVOIR
ÖLBEHALTER
SERBATOIO D'OLIO
RESERVOIR

MODEL 8070 - 8080

Fig.	Order Ref.	CD	8070	8080	Code	Description	N.B.	
1	366299 8		1		492	Filter cap	0.3	
	366299 8			1	330	Filter cap	0.3	
2	120098 6		6	6		Hex. cap screw		
3	373817 7		6	6		Seal washer		
4	140014 4		6	6		Plain washer		
5	322356 8		6	6		Tooth lockwasher		
6	100013 4		6	6		Hex. nut		
7	120099 8		8	8		Hex. cap screw		
8	140015 6		8	8		Plain washer		
9	373816 5		8	8		Seal washer		
10	374904 3		1		492	Cover		
	374904 3			1	330	Cover		
11	373815 3		1		492	Seal washer		
	373815 3			1	330	Seal washer		
12	378856 4		1		492	Reservoir assembly	1.4	Incl. Figs 13 and 14
	378856 4			1	330	Reservoir assembly	1.4	Incl. Figs 13 and 14
13	372198 2		1		492	Filter retainer cap		
	372198 2			1	330	Filter retainer cap		
14	379807 2		2		492	Tension spring		
	379807 2			2	330	Tension spring		
15	398897 4		1		492	Filter element		
	398897 4			1	330	Filter element		
16	220049 4		1	1		Seal washer		
17	366298 6		1	1		Plug		
18	456478 7		1		47	Reservoir assembly	1.4	Incl. Figs. 2,3,4,5,7,8,9,16,17,19,21,22, and 23
	456478 7			1	40	Reservoir assembly	1.4	Incl. Figs. 2,3,4,5,7,8,9,16,17,19,21,22 and 23
	449961 3		1		48	Reservoir assembly	1.4	Incl. Figs. 2,3,4,5,7,8,9,16,17,20,22,23,24 and 25 Hydrostatic drive
	449961 3			1	41	Reservoir assembly	1.4	Incl. Figs. 2,3,4,5,7,8,9,16,17,20,22,23,24 and 25 Hydrostatic drive
19	455864 5		1		47	Filter cap	0.3	Except hydrostatic drive
	455864 5			1	40	Filter cap	0.3	Except hydrostatic drive
20	366299 8		1		48	Cap with filter	0.3	Hydrostatic drive
	366299 8			1	41	Cap with filter	0.3	Hydrostatic drive
21	456473 7		1		47	Filter element		Except hydrostatic drive
	456473 7			1	40	Filter element		Except hydrostatic drive
22	450685 0		1		47	Cover		
	450685 0			1	40	Cover		

https://michelroger.be 84

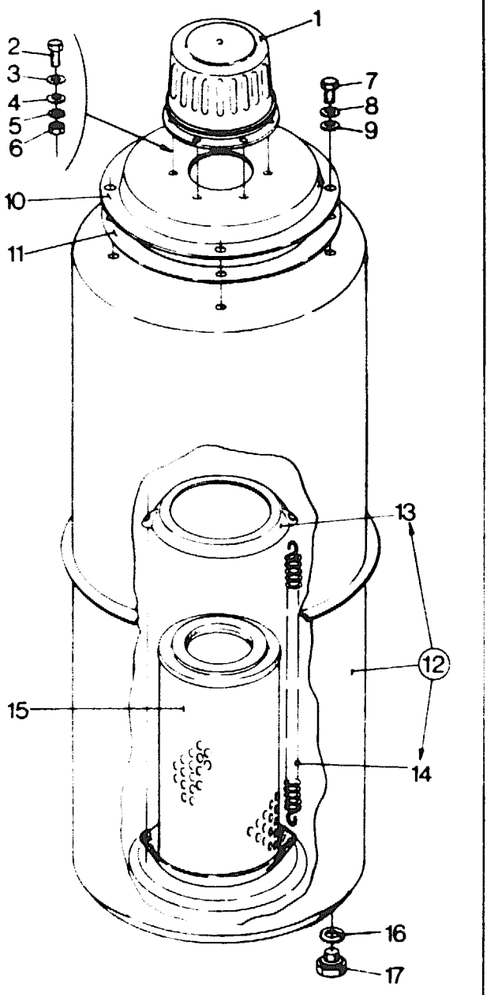

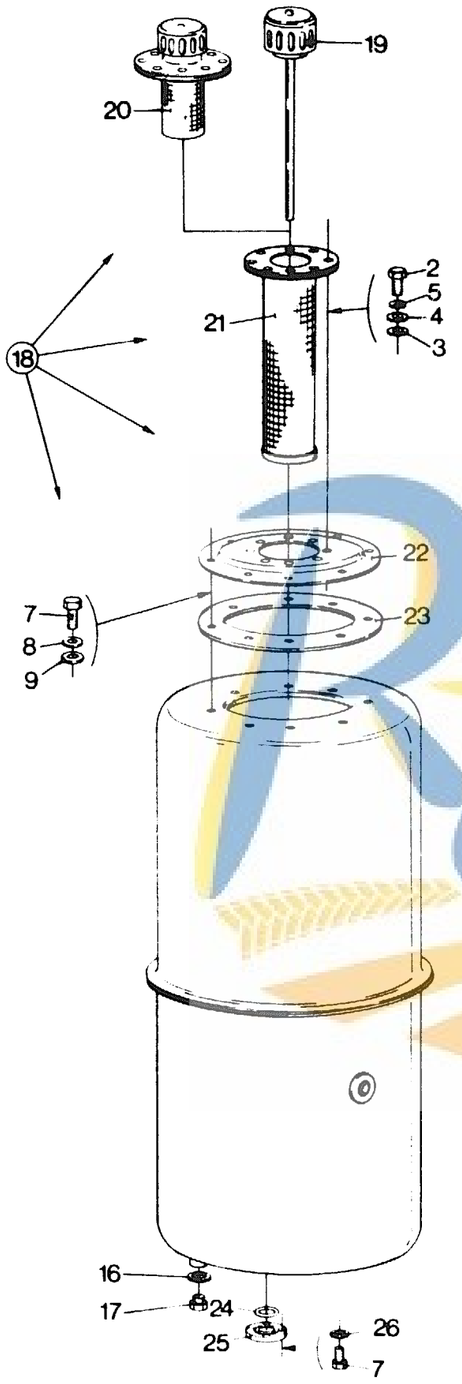

HYDRAULIC OIL RESERVOIR
RESERVOIR
ÖLBEHALTER
SERBATOIO D'OLIO
RESERVOIR

MODEL 8070 - 8080

Fig.	Order Ref.	CD	8070	8080	Code	Description	N.B.
23	450663	4	1	1	47	Seal washer	
	450663	4		1	40	Seal washer	
24	167266	8	1		48	"O" ring	For hydrostatic only
	167266	8		1	41	"O" ring	For hydrostatic only
25	450652	1	1		48	Cover	For hydrostatic only
	450652	1		1	41	Cover	For hydrostatic only
26	322357	0	4	4		Tooth lockwasher	

Michel ROGER

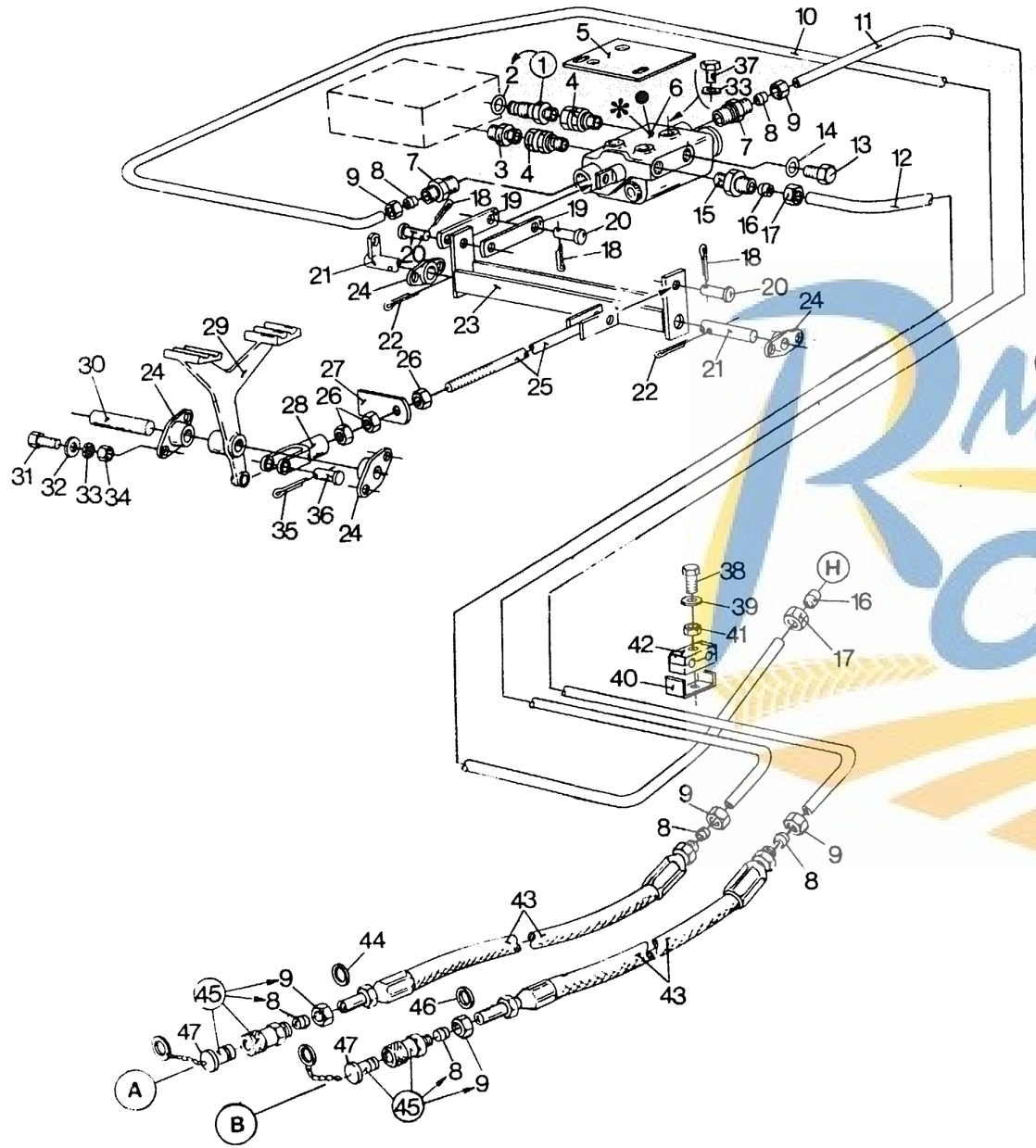

HYDRAULIC HORIZONTAL REEL ADJUSTMENT
DEPLACEMENT HYDRAULIQUE HORIZONTALE DU RABATTEUR
HYDRAULISCHER HORIZONTALE HASPELVERSTELLUNG
REGOLAZIONE ORIZZONTALE IDRAULICA DELL'ASPO
HYDRAULISCHE HORIZONTALE HASPELVERSTELLING

MODEL 8070 - 8080

Fig.	Order Ref.	CD	8070	8080	Code	Description	N.B.
1	386693 8		1	1		Adapter fitting	Incl.fig.2
2	387530 5		1	1		Seal washer	
3	380738 8		1	1		Connector fitting, straight	
4	380737 6		2	2		Adapter fitting	
5	385754 7		1	1		Mounting plate	
6	379663 6		1	1	3.3	Valve assy, Hydraulic control (Single spool)	Incl.figs. * and ●
7	386215 6		2	2		Connector fitting, straight	
8	335136 7		AR	AR		Ferrule	
9	335135 5		AR	AR		Coupler nut	
10	+		1	1		Hydraulic pipe	Ø 8 mm (5/16")
11	+		1	1		Hydraulic pipe	Ø 8 mm (5/16")
12	+		1	1		Hydraulic pipe	Ø 18 mm (23/32")
13	387512 7		1	1		Plug	
14	220022 8		1	1		Seal washer	
15	394373 0		1	1		Connector fitting, straight	
16	335168 4		2	2		Ferrule	
17	335170 9		2	2		Coupler nut	
18	130002 7		3	3		Cotter pin	
19	388650 0		2	2		Connecting link	
20	335040 4		3	3		Clevis pin	
21	389304 8		1	1		Shaft	
22	130007 7		2	2		Cotter pin	
23	392631 6		1	1		Lever	
24	334707 7		4	4		Flange bearing	
25	392629 1		1	1		Connecting rod	
26	100016 0		3	3		Hex. nut	
27	309586 8		1	1		Lever	
28	373678 1		1	1		Clevis	
29	392128 9		1		848	Foot pedal	
	753273 3		1		64	Foot pedal	
	392128 9			1	609	Foot pedal	
	753273 3			1	51	Foot pedal	
30	333994 3		1	1		Shaft	
31	120161 1		4	4		Hex. cap screw	
32	378243 5		4	4		Plain washer	
33	322358 2		4	4		Tooth lockwasher	
34	100015 8		4	4		Hex. nut	
35	130003 9		4	4		Cotter pin	

https://michelroger.be 86

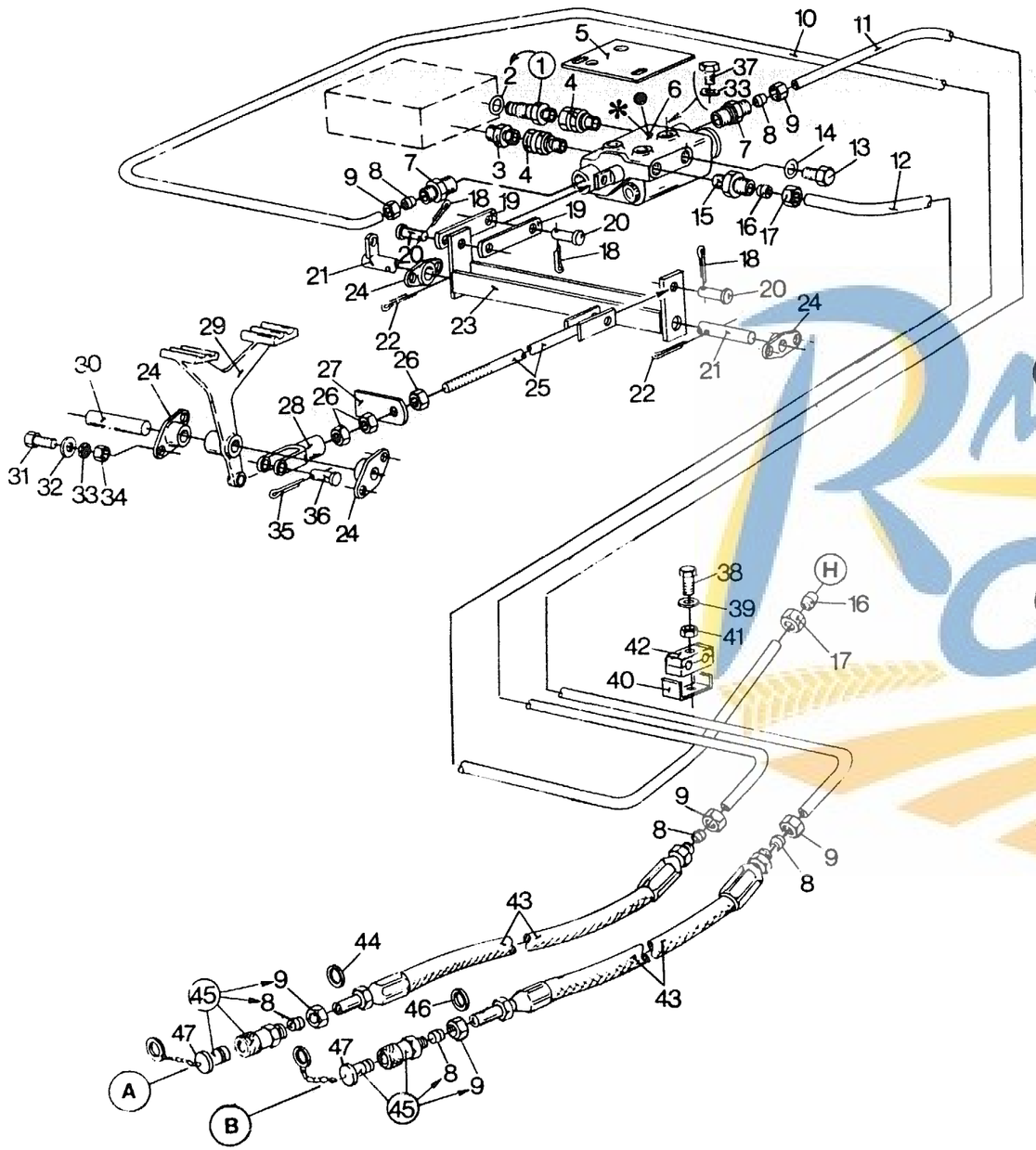

HYDRAULIC HORIZONTAL REEL ADJUSTMENT
DEPLACEMENT HYDRAULIQUE HORIZONTALE DU RABATTEUR
HYDRAULISCHER HORIZONTALE HASPELVERSTELLUNG
REGOLAZIONE ORIZZONTALE IDRAULICA DELL'ASPO
HYDRAULISCHE HORIZONTALE HASPELVERSTELLING

MODEL 8070 - 8080

Fig.	Order Ref.	CD	8070	8080	Code	Description	N.B.
36	322901 5		1	1		Clevis pin	
37	300380 3		3	3		Hex. cap screw	
38	120055 6		6	6		Hex. cap screw	
39	140015 6		2	2		Plain washer	
40	431941 1		1	1		Clamp bracket	
41	412152 5		2	2		Hex.nut	
42	430357 1		2	2		Clamp	Ø 8 — Ø 12 mm (5/16" - 15/32")
43	424525 0			2		Hydraulic hose	
	335005 0		2			Hydraulic hose	
44	372110 8		2	2		Plain washer	
45	362452 0		2		609	Coupling	Incl.figs. 8 and 9
	362452 0			2	852	Coupling	Incl.figs. 8 and 9
	456012 1		2		51	Coupling	Incl.fig. 47
	456012 1			2	65	Coupling	Incl.fig. 47
46	372109 5		2	2		Plain washer	
*	388775 4		1	1		Seal kit	
●	388776 6		1	1		Seal kit	
47	456014 5			1	51	Plug	
	456014 5		1		65	Plug	

https://michelroger.be 87

Michel ROGER GROUP

37 ▸ 41

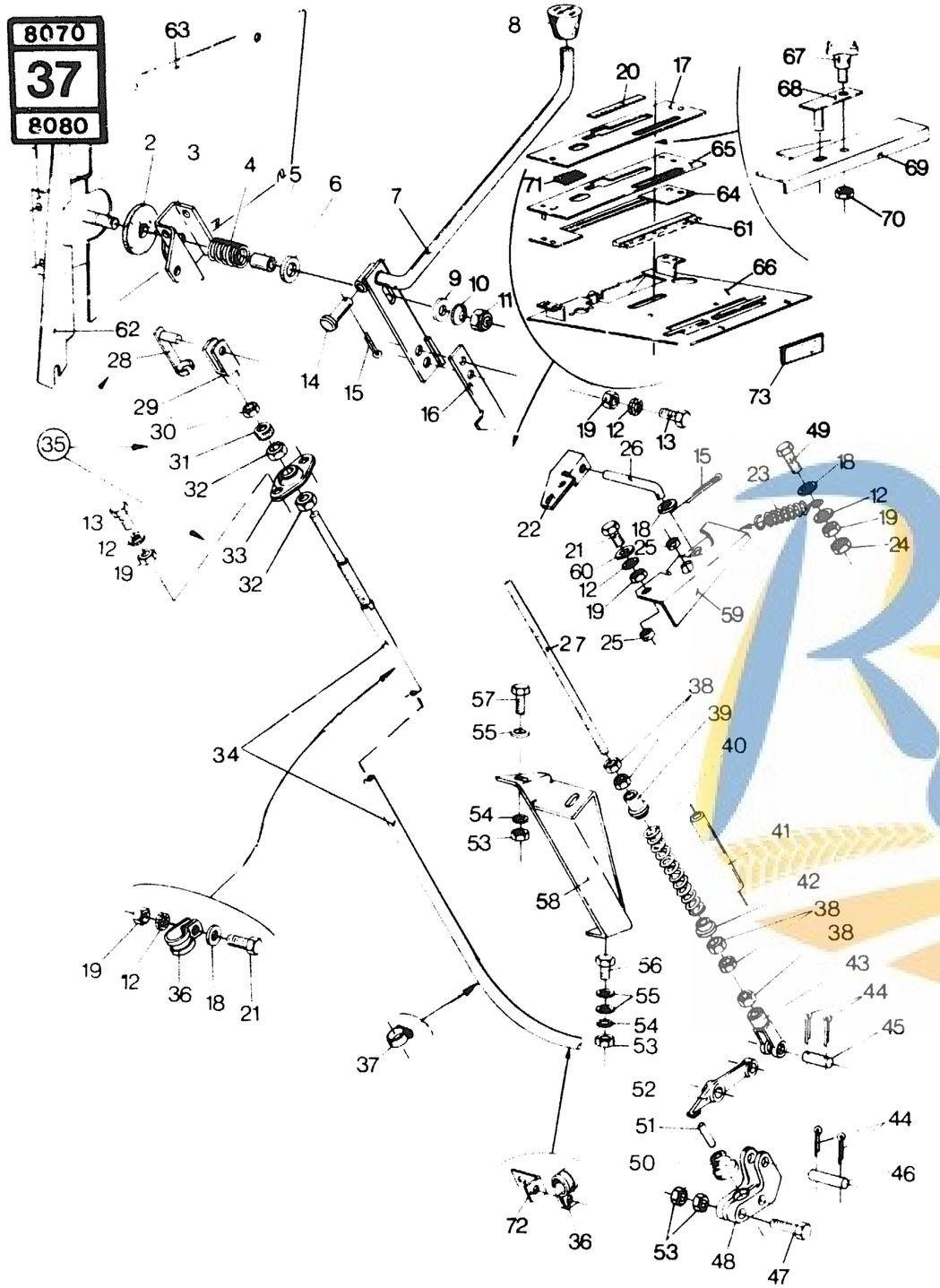

SPEED RANGE CONTROL GROUP FOR HYDROSTATIC DRIVE
LEVIER DE VITESSE DE LA TRANSMISSION HYDROSTATIQUE
FAHRHEBEL FÜR HYDROSTATISCHEN ANTRIEB
DISTRIBUTORE PER IL COMANDO DELLA STERZATURA IDROSTATICA
BEDIENINGSGROEP VOOR HYDROSTATISCHE AANDRIJVING

MODEL 8070 - 8080

Fig.	Order Ref.	CD	8070	8080	Code	Description	N.B.
1	432809	2	1	1		Support plate	
2	360837	4	1	1		Friction disc	0.5
3	432858	5	1	1		Support	
4	432755	7	1	1		Tension spring	0.5
5	432840	8	1	1		Bushing	0.5
6	378246	1	1	1		Washer	
7	432868	6	1		845	Control lever	
	748150	6	1		59	Control lever	
	432868	6		1	519	Control lever	
	748150	6		1	48	Control lever	
8	322508	1	1	1		Knob	
9	378245	9	10	10		Washer	
10	364869	5	1	1		Cup spring	
11	412126	0	4	4		Hex. lock nut	
12	322357	0	16	16		Tooth lockwasher	
13	120099	8	18	18		Hex. cap screw	
14	394055	6	1	1		Clevis pi..	
15	130002	7	1	1		Cotter pin	
16	432839	5	1		845	Hook	
	432839	5		1	519	Hook	
17	439322	7	1	1		Support	
18	140015	6	8	8		Plain washer	
19	100014	6	16	16		Hex.nut	
20	396269	1	1	1		Decal	
21	120100	3	4	4		Hex. cap screw	
22	432851	1	1	1		Support	
23	180033	2	1	1		Spring	
24	412152	5	1	1		Hex. lock nut	
25	396606	7	2	2		Bushing	
26	432838	3	1	1		Connecting rod	
27	388907	5	1		643	Connecting rod	
	455021	9	1		52	Connecting rod	
	388907	5		1	334	Connecting rod	
	455021	9		1	44	Connecting rod	
28	354140	9	2	2		Clip	
29	354141	1	2	2		Clevis	
30	354143	5	2	2		Hex. nut	
31	354144	7	2	2		Seal nut	
32	354145	9	4	4		Hex. nut	
33	354142	3	2	2		Flange bearing	
34	354146	1	1	1		Cable	1.1
35	389111	9	1	1		Cable assembly	Incl. figs. 28 to 34

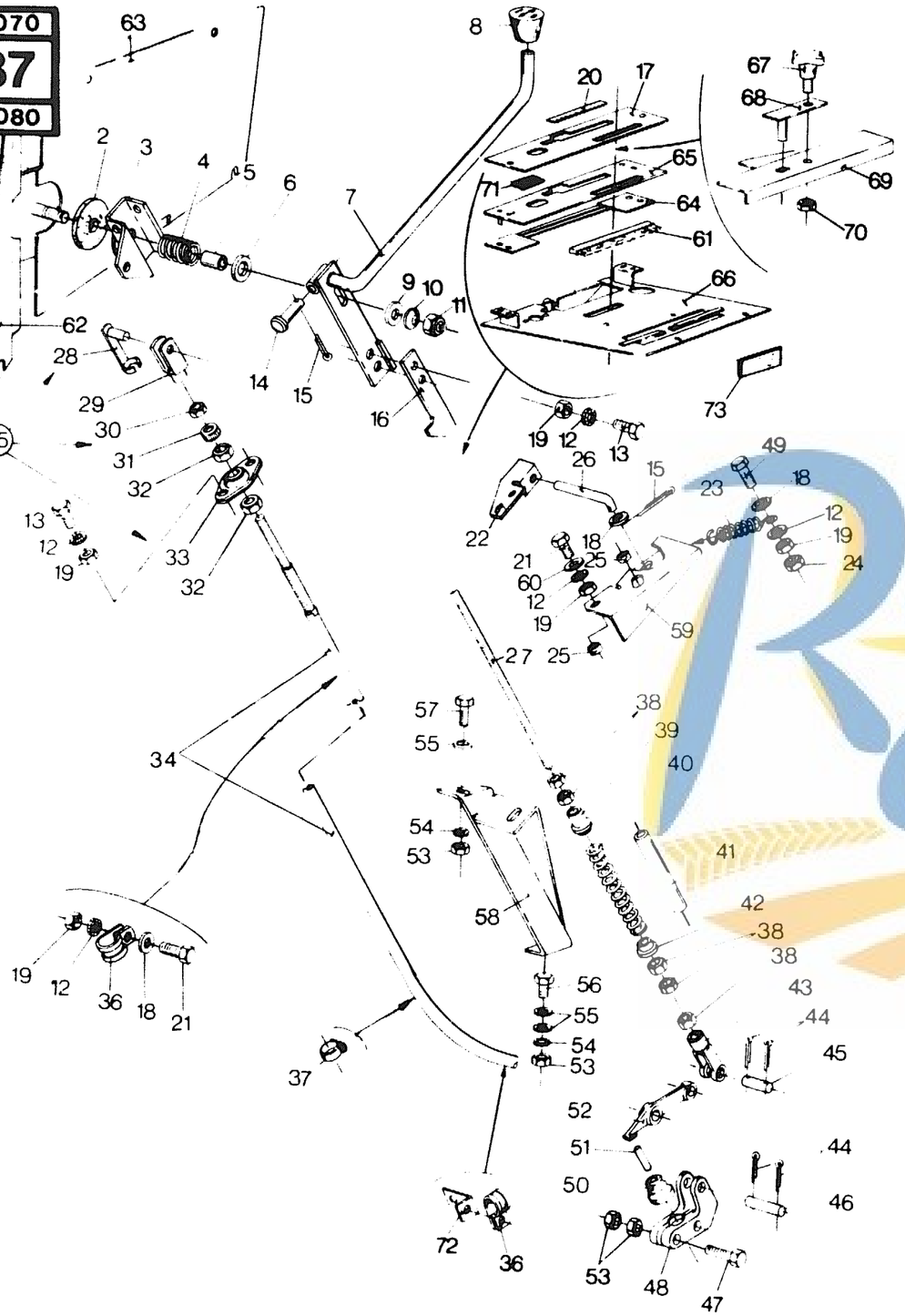

SPEED RANGE CONTROL GROUP FOR HYDROSTATIC DRIVE
LEVIER DE VITESSE DE LA TRANSMISSION HYDROSTATIQUE
FAHRHEBEL FÜR HYDROSTATISCHEN ANTRIEB
DISTRIBUTORE PER IL COMANDO DELLA STERZATURA IDROSTATICA
BEDIENINGSGROEP VOOR HYDROSTATISCHE AANDRIJVING

MODEL 8070 - 8080

Fig.	Order Ref.	CD	8070	8080	Code	Description	N.B.
36	335021 4		4	4		Clamp	
37	353213 3		12	12		Clamp	
38	100016 0		8	8		Hex. nut	
39	354088 7		1	1		Spring support	
40	354085 1		1	1		Tension spring	0.7
41	354086 3		1	1		Bushing	
42	354087 5		1	1		Spring support	
43	340075 4		1	1		Clevis	
44	130003 9		4	4		Cotter pin	
45	390015 8		1	1		Pivot pin	
46	390017 2		1	1		Pivot pin	
47	120107 7		2	2		Hex. cap screw	
48	388911 4		1		745	Lever	
	455328 9		1		55	Lever	
	388911 4			1	491	Lever	
	455328 9			1	47	Lever	
49	120102 7		1	1		Hex. cap screw	
50	378840 1		1		745	Protection cap	0.4
	455321 5		1		55	Protection cap	
	378840 1			1	491	Protection cap	
	455321 5			1	47	Protection cap	
51	380543 5		1		643	Pin	
	453396 0		1		52	Pin	
	380543 5			1	334	Pin	
	453396 0			1	44	Pin	
52	388912 6		1	1		Lever	
53	100015 8		2	2		Hex. nut	
54	322358 2		2	2		Tooth lockwasher	
55	378243 5		6	6		Plain washer	
56	120104 1		2	2		Hex. cap screw	
57	120161 1		2	2		Hex. cap screw	
58	388908 7		1	1		Support	
59	432899 1		1	1		Hinged bracket	
60	362776 6		2	2		Plain washer	
61	432837 1		1	1		Brush	
62	432820 6		1	1		Guard	
63	432816 7		1	1		Guard	
64	432847 2		1	1		Holder	
65	439323 9			1		Plate	
	432849 6		1		338	Plate	
	439323 9		1		35	Plate	

https://michelroger.be

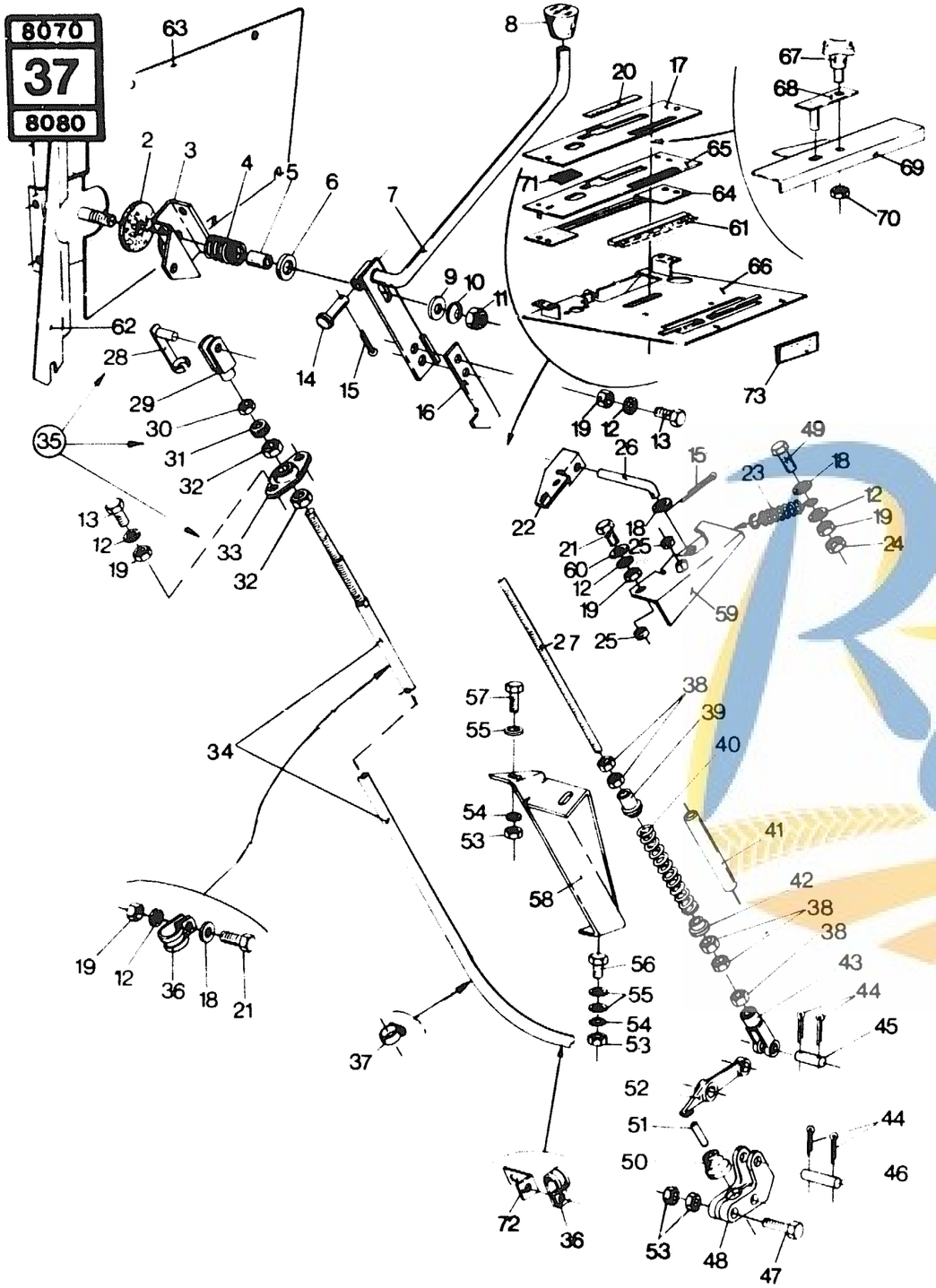

137 A

SPEED RANGE CONTROL GROUP FOR HYDROSTATIC DRIVE
LEVIER DE VITESSE DE LA TRANSMISSION HYDROSTATIQUE
FAHRHEBEL FÜR HYDROSTATISCHEN ANTRIEB
DISTRIBUTORE PER IL COMANDO DELLA STERZATURA IDROSTATICA
BEDIENINGSGROEP VOOR HYDROSTATISCHE AANDRIJVING

MODEL 8070 - 8080

Fig.	Order Ref.	CD	8070	8080	Code	Description	N.B.
66	439388 5			1		Plate	
	432865 0		1		338	Plate	
	439388 5		1		35	Plate	
67	432583 2		1	1		Knob	
68	432855 9		1	1		Guide	
69	432861 2		1	1		Stop	
70	412152 5		1	1		Hex. lock nut	
71	439303 7			1		Seal strip	
	433331 0		1		338	Seal strip	
	439303 7		1		35	Seal strip	
72	397640 0		1	1		Bracket	
73	426052 9		1	1		Decal.	

https://michelroger.be

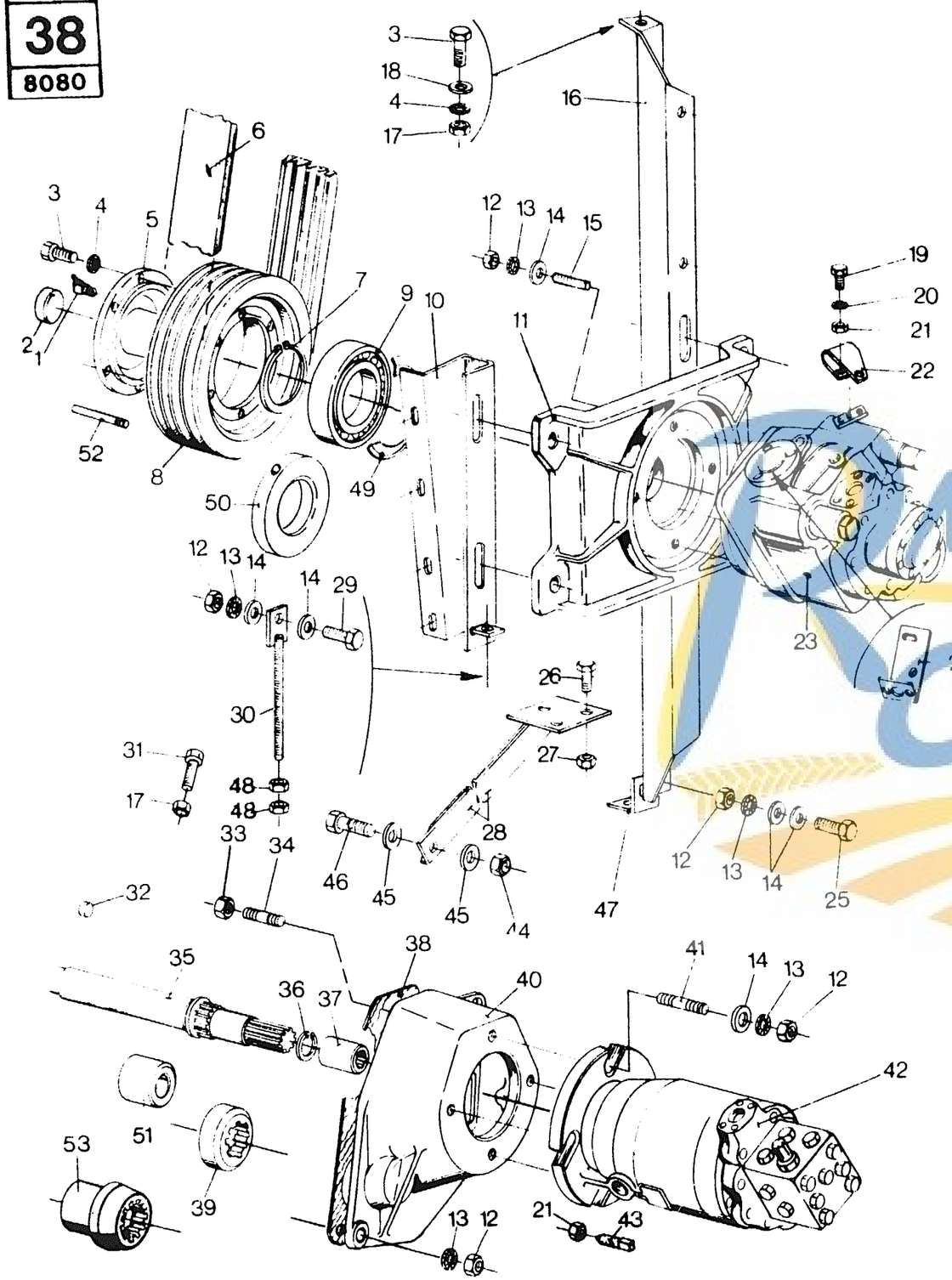

HYDROSTATIC DRIVE GROUP
GROUPE D'ENTRAINEMENT HYDROSTATIQUE
HYDROSTATISCHE ANTRIEBSGRUPPE
GRUPPO DI COMANDO DELLA STERZATURA IDROSTATICA
HYDROSTATISCHE AANDRIJFGROEP

MODEL 8070 - 8080

Fig.	Order Ref.	CD	8070	8080	Code	Description	N.B.
1	332040	1	2	2		Grease fitting	
2	392335	8	1	1		Cover	
3	120110	4	12	12		Hex. cap screw	
4	140045	9	15	15		Tooth lockwasher	
5	388062	3		1	326	Hub	2.1
	388062	3	1		345	Hub	
	420451	9		1	385	Hub	
	450481	8		1	40	Hub	
	420451	9	1		448	Hub	
	450481	8	1		46	Hub	
6	411543	3	1	1		Powerband belt	2.1
7	370009	1	1	1		Circlip	1.9
8	388063	5		1	326	Pulley	
	388063	5	1		345	Pulley	
	420452	1		1	385	Hub	
	448730	3		1	40	Hub	
	420452	1	1		448	Hub	
	448730	3	1		46	Hub	
9	388032	0		1	326	Ball bearing	2.5
	388032	0	1		345	Ball beearing	
	420409	0		2	385	Ball bearing	
	450420	0		2	40	Ball bearing	
	420409	0	2		448	Ball bearing	
	450420	0	2		46	Ball bearing	
10	411561	1	1	1		Support	
11	411580	1		1	326	Support flange	2.6
	411580	1	1		345	Support flange	
	420453	3		1	385	Support flange	
	450482	0		1	40	Support flange	
	420453	3	1		448	Support flange	
	450482	0	1		46	Support flange	
12	337475	7	12	12		Hex. nut	
13	140046	1	12	12		Tooth lockwasher	
14	378245	9	12	12		Plain washer	
15	350341	1	4	4		Stud	
16	411563	5	1	1		Support	
17	100016	0	8	8		Hex. nut	
18	378244	7	8	8		Plain washer	
19	300506	1	2	2		Hex. cap screw	
20	322357	0	2	2		Tooth lockwasher	
21	100014	6	2	2		Hex. nut	
22	389496	3	1	1		Bracket	

https://michelroger.be 92

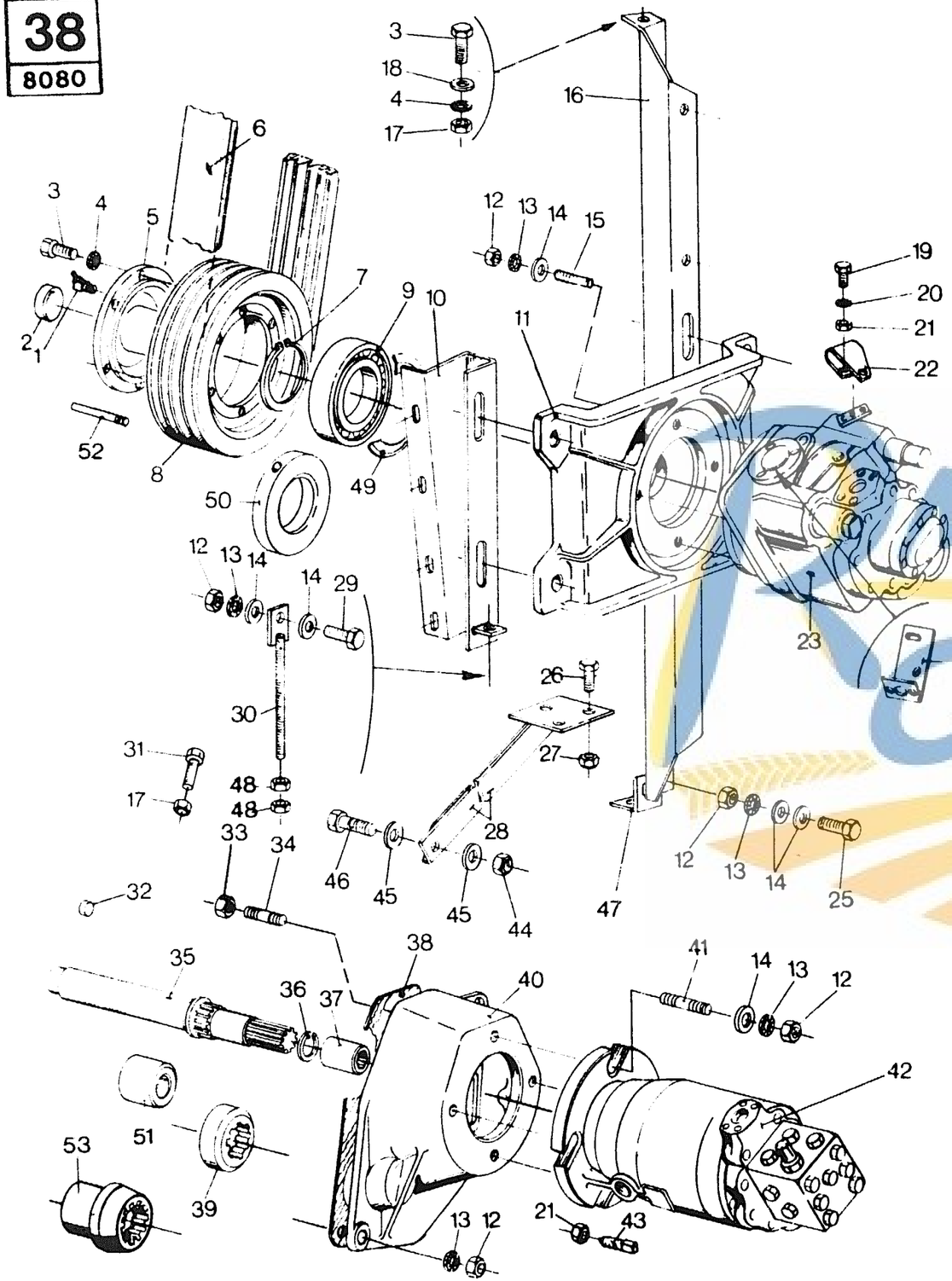

HYDROSTATIC DRIVE GROUP
GROUPE D'ENTRAINEMENT HYDROSTATIQUE
HYDROSTATISCHE ANTRIEBSGRUPPE
GRUPPO DI COMANDO DELLA STERZATURA IDROSTATICA
HYDROSTATISCHE AANDRIJFGROEP

MODEL 8070 - 8080

Fig.	Order Ref.	CD	8070	8080	Code	Description		N.B
23	391591	9	1	1		Hydrostatic pump assembly	2.5	For details see group 41
24	392887	7	1	1		Bracket		
25	120120	5	1	1		Hex. cap screw		
26	300389	1	2	2		Hex. cap screw		
27	100038	6	2	2		Hex. lock nut		
28	389873	3	1	1		Support		
29	337563	4	2	2		Hex. cap screw		
30	417711	6	2	2		Adjusting rod		
31	120115	4	1	1		Hex. cap screw		
32	396661	3	1	1		Plug		
33	100037	4	2	2		Hex. lock nut		
34	336270	2	2	2		Stud		
35	396115	6	1	1		Drive shaft	7.4	
36	300642	9	1	1		Circlip		
37	388121	9	1	1		Splined connector		
38	430801	4	1		844	Gasket		
	456162	8	1		58	Gasket		
	430801	4		1	491	Gasket		
	456162	8		1	47	Gasket		
39	394362	7	1	1	867	Splined bushing		
40	430435	7	1		844	Support flange		
	456648	8	1		58	Support flange		
	430435	7		1	491	Support flange		
	456648	8		1	47	Support flange		
41	350342	3		4	611	Stud		
	350342	3	4		851	Stud		
	350341	1		4	56	Stud		
	350341	1	4		72	Stud		
42	395533	1	1		643	Hydrostatic motor assy	2.5	For details see group 39
	455011	8	1		52	Hydrostatic motor assy		For details see group 39
	395533	1		1	334	Hydrostatic motor assy		For details see group 39
	455011	8		1	44	Hydrostatic motor assy		For details see group 39
43	300475	4	1	1		Presbolt		
44	100039	8	1	1		Hex. lock nut		
45	333041	4	2	2		Plain washer		
46	120091	2	1	1		Hex. cap screw		
47	392826	9	1	1		Angle bracket		
48	337475	7	2	2		Hex. nut		
49	388427	7		1	36	Nilos ring		
	388427	7	1		42	Nilos ring		

https://michelroger.be 93

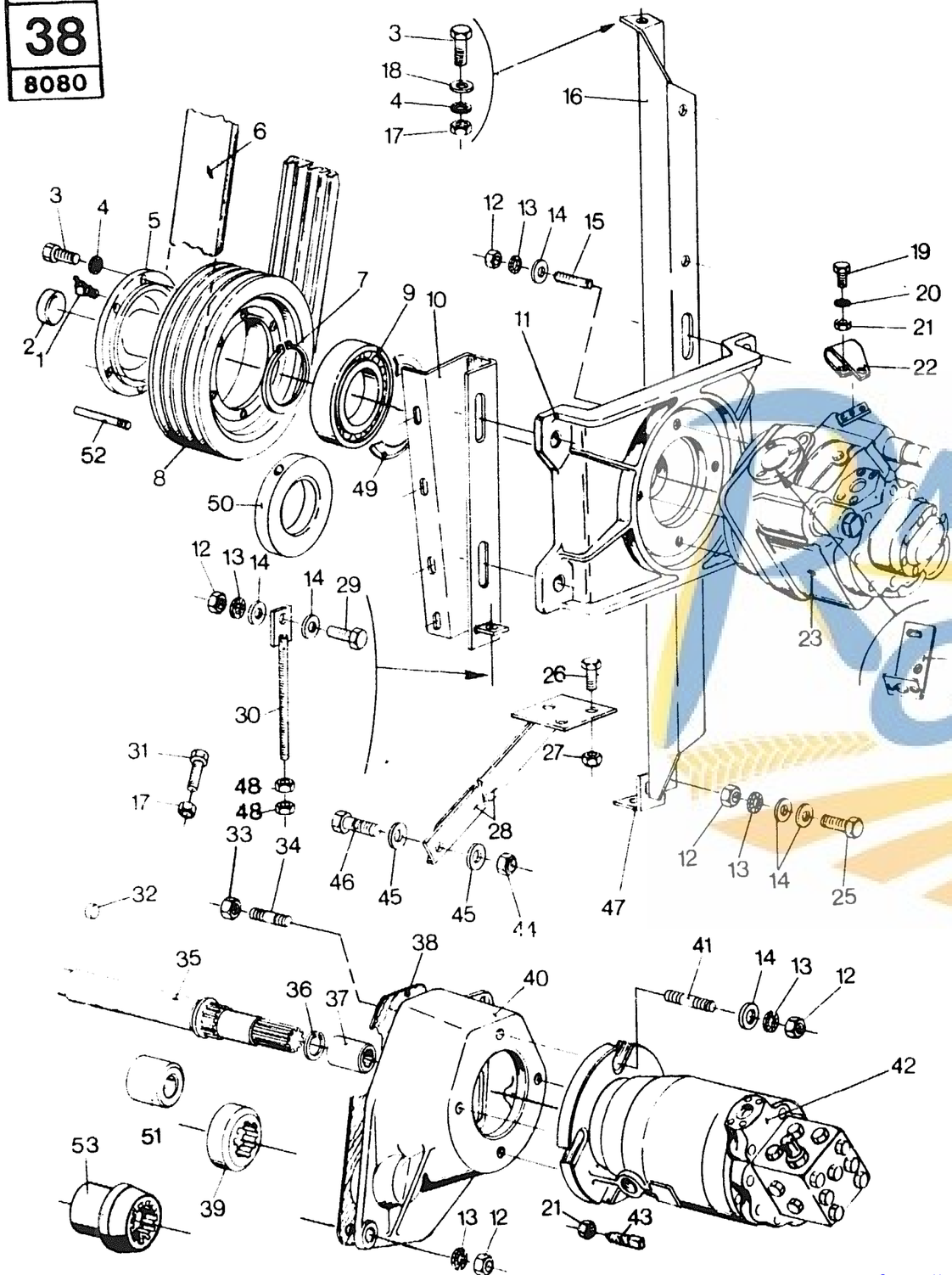

141A

HYDROSTATIC DRIVE GROUP
GROUPE D'ENTRAINEMENT HYDROSTATIQUE
HYDROSTATISCHE ANTRIEBSGRUPPE
GRUPPO DI COMANDO DELLA STERZATURA IDROSTATICA
HYDROSTATISCHE AANDRIJFGROEP

MODEL 8070 - 8080

Fig.	Order Ref.	CD	8070	8080	Code	Description	N.B
50	420454	5		1	385	Distance bushing	
	448716	3		1	40	Kit, Distance bushing	
	420454	5	1		448	Distance bushing	
	448716	3	1		46	Kit, Distance bushing	
51	396118	2	1	1	867	Bushing	
52	160091	0		1	40	Tube	
	160091	0	1		46	Tube	
53	**9508580**	**5**	1		76	Bushing	

Michel ROGER

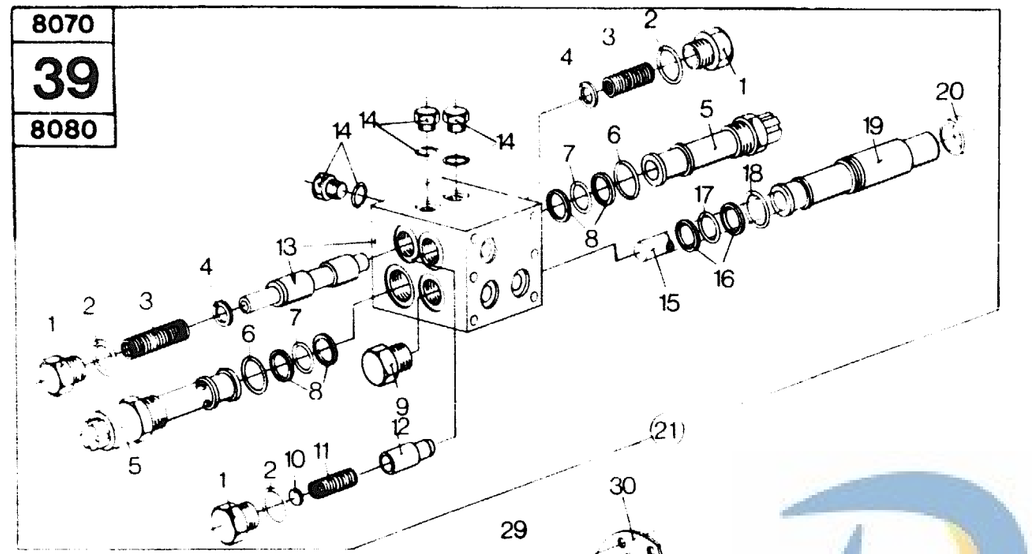

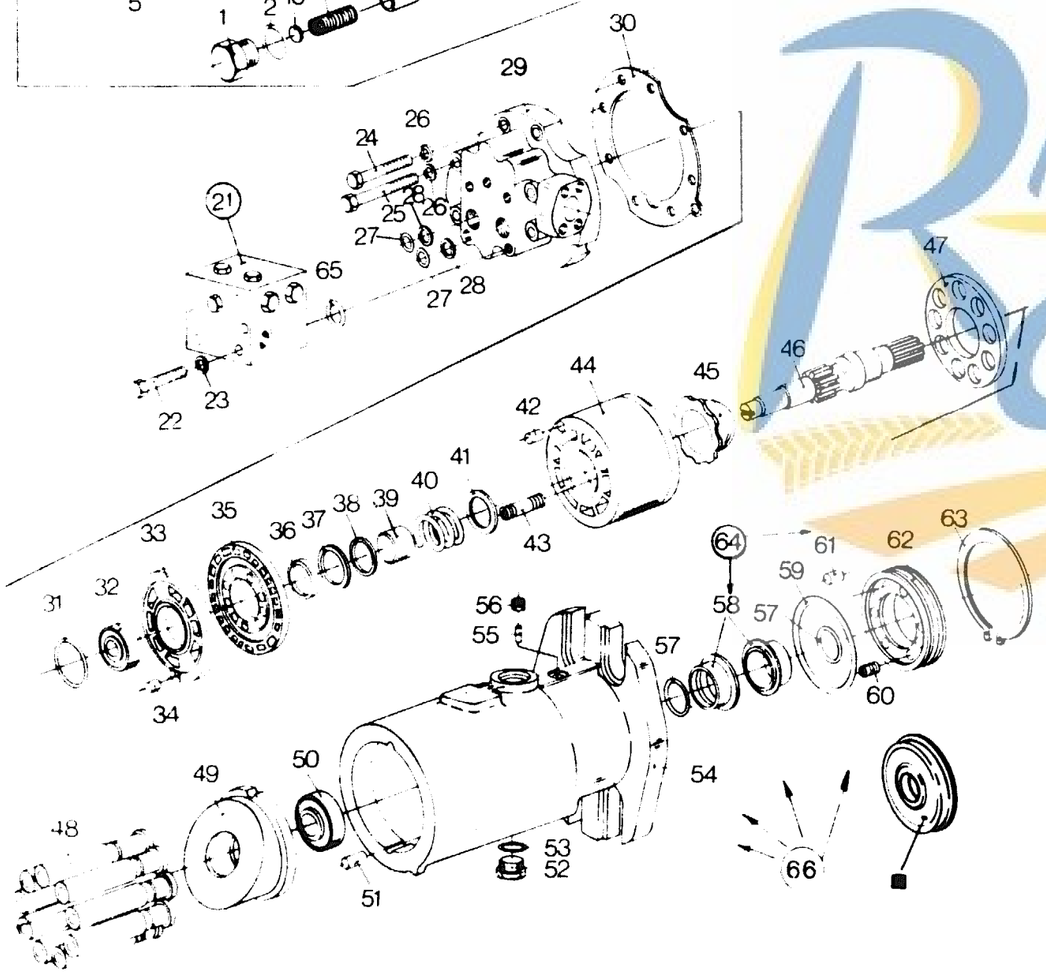

HYDROSTATIC MOTOR
MOTEUR HYDROSTATIQUE
HYDROSTATIK MOTOR
MOTORE IDROSTATICO
HYDROSTATIEK MOTOR

Fig.	Order Ref.	CD	8070	8080	Code	Description	N.B.
1	166282	1	3	3		Plug	
2	165175	3	3	3		"O" ring	
3	166239	0	2	2		Spring, shuttle valve	
4	166286	9	2	2		Washer	
5	392455	2	2		643	Relief valve assembly, High pressure	
	455012	0	2		52	Relief valve assembly, High pressure	
	392455	2		2	334	Relief valve assembly, High pressure	
	455012	0		2	44	Relief valve assembly, High pressure	
* 6	166285	7	2	2		"O" ring	
* 7	052392	7	2	2		"O" ring	
* 8	166236	4	4	4		Back-up ring	
9	188583	5	1	1		Plug	
10	166209	7	AR	AR		Shim, relief valve	
11	188576	0	1	1		Spring, relief vaive	
12	188574	6	1	1		Relief valve	
13	188573	4	1	1		Manifold housing	Incl. shuttle valve
14	166240	3	3	3		Plug and "O" ring	
15	188580	9	1	1		Plunger	
16	188581	1	2	2		Back-up ring	
17	188582	3	1	1		"O" ring	
18	188578	4	1	1		Plunger guide "O" ring	
19	188577	2	1		643	Plunger guide	
	455173	0	1		52	Plunger guide	
	188577	2		1	334	Plunger guide	
	455173	0		1	44	Plunger guide	
20	188579	6	1	1		Plunger	
21	396319	8	1	1		Manifold assembly	0.5 Incl.figs.1 to 20
22	088638	1	6	6		Hex. cap screw	
23	087362	5	6	6		Plain washer	
24	087178	4	4	4		Hex. cap screw	
25	087870	2	4	4		Hex. cap screw	
26	087363	7	8	8		Plain washer	
** 27	163107	8	2	2		"O" ring	
** 28	163106	6	2	2		Back-up ring	
29	188541	7	1	1		End cap	
** 30	188543	1	1	1		End cap gasket	
31	188542	9	AR	AR		Shim	Thickness 0,10 mm
32	188544	3	1	1		Rear bearing	
33	188545	5	1	1		Valve plate	
34	165181	6	1	1		Pin	
35	188546	7	1	1		Bearing plate	

https://michelroger.be

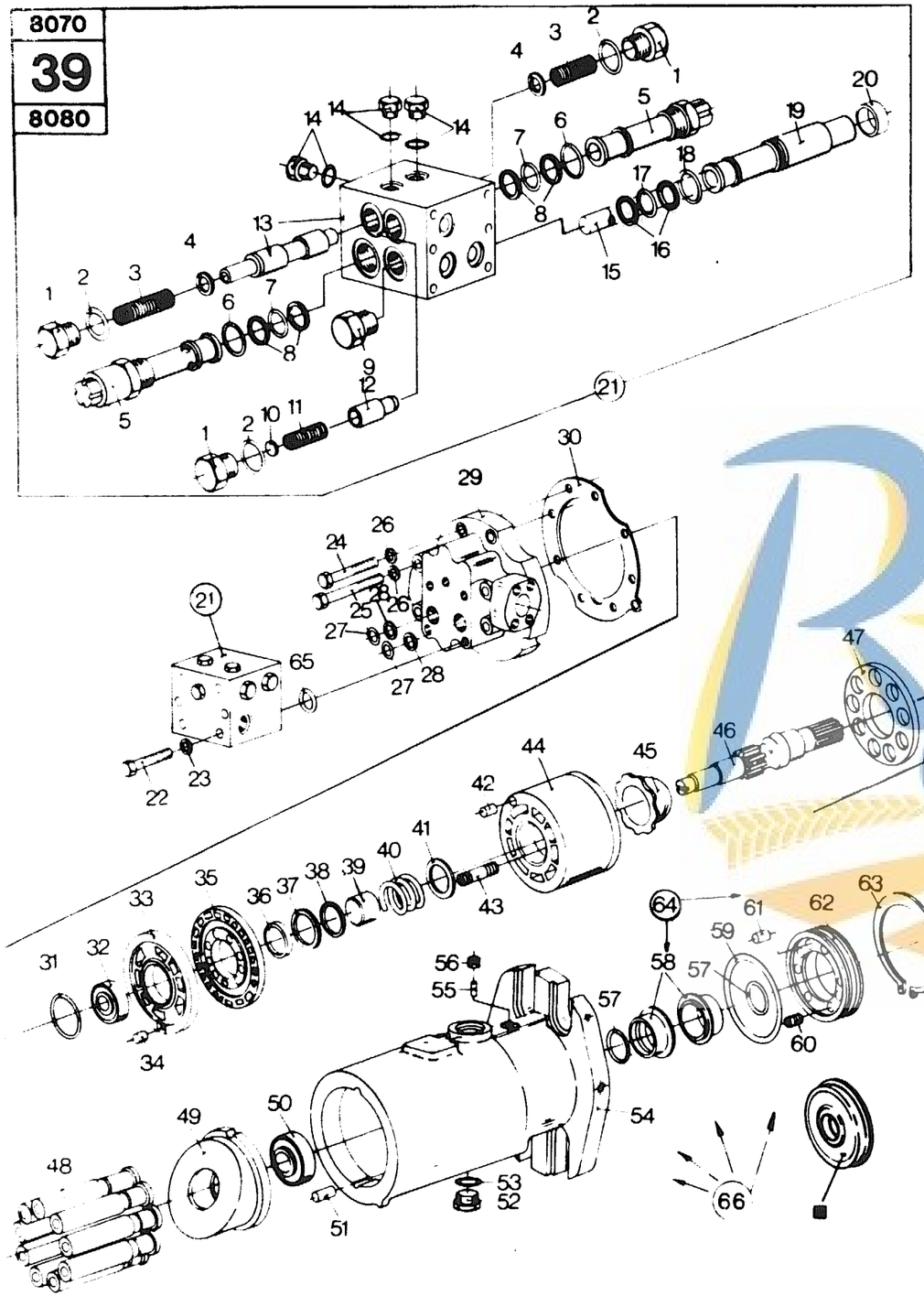

HYDROSTATIC MOTOR
MOTEUR HYDROSTATIQUE
HYDROSTATIK MOTOR
MOTORE IDROSTATICO
HYDROSTATIEK MOTOR

MODEL 8070 - 8080

Fig.	Order Ref.	CD	8070	8080	Code	Description	N.B.
36	188547 9		1	1		Pilot, bearing plate	
37	188548 1		1	1		Retaining ring	
38	188549 3		1	1		Spring retainer	
39	188550 6		1	1		Spring guide	
40	188551 8		1	1		Spring, cylinder block	
41	188552 0		1	1		Spring seat	
42	165186 6		1	1		Pin	
43	188554 4		9	9		Retaining spring	
44	188553 2		1	1		Cylinder block assy	
45	188555 6		1	1		Retainer guide	
46	443536 6		1	1		Drive shaft	
47	188557 0		1	1		Slipper retainer	
48	188558 2		9	9		Piston assembly	
49	188559 4		1	1		Swash plate	
50	188560 7		1	1		Front bearing	
51	165179 1		2	2		Pin	
52	165174 1		1	1		Hex. head plug, straight thread	
** 53	165175 3		1	1		"O" ring	
54	188561 9		1	1		Motor housing	
55	081837 6		1	1		Dowel pin	
56	080709 4		1	1		Pipe plug	
** 57			2	2		"O" ring	
58			1	1		Seal	
** 59			1	1		"O" ring seal retainer	
60	163086 2		8		347	Seal pin	
	163086 2			8	329	Seal pin	
61	165228 6		1		347	Groove pin	
	165228 6			1	329	Groove pin	
62	188564 5		1		347	Seal retainer	
	188564 5			1	329	Seal retainer	
63	188565 7		1		347	Retaining ring	
	188565 7			1	329	Retainer ring	
64	385937 5		1		347	Seal kit	Incl. figs. 58 to 63
	385937 5			1	329	Seal kit	
** 65	514098 2		1	1		"O" ring	
66	395533 1		1		643	Hydrostatic motor assy	Incl. all figs.
	455011 8		1		52	Hydrostatic motor assy	Incl. all figs.
	395533 1			1	334	Hydrostatic motor assy	Incl. all figs.
	455011 8			1	44	Hydrostatic motor assy	Incl. all figs.
■	449103 5		1		44	Seal assembly	
	449103 5			1	39	Seal assembly	

https://michelroger.be

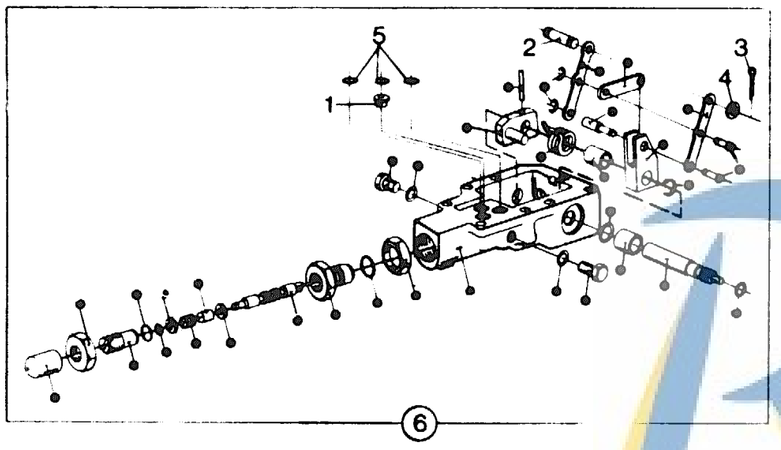

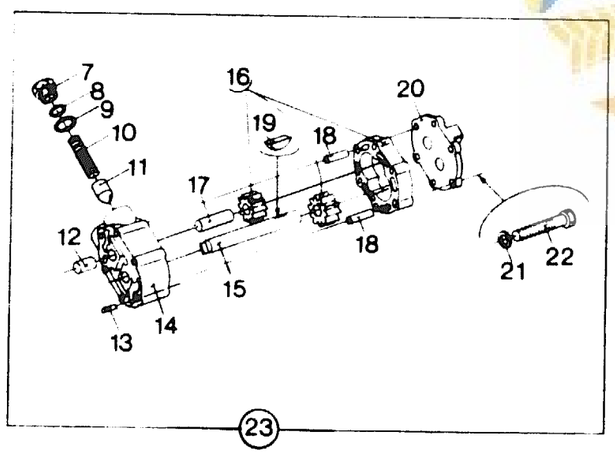

CONTROL VALVE AND CHARGE PUMP
VALVE DISTRIBUTRICE ET POMPE DE GAVAGE
STEUERVENTIL UND FÜLLPUMPE
VALVOLA DI COMANDO
BEDIENINGSKLEP EN VULPOMP

MODEL 8070 - 8080

Fig.	Order Ref.	CD	8070	8080	Code	Description		N.B.
●						Not available as Service Part		
1	188534 2		1	1		Orifice plate		
2	163091 3		1	1		Pin		
3	081858 0		1	1		Cotter pin		
4	065248 7		2	2		Plain washer		
* 5	063093 6		3	3		"O" ring		
6	188533 0		1	1		Control valve assembly	0.7	incl.figs. ●, 1 and 5
7	166282 1		1	1		Plug		
8	166209 7		AR	AR		Shim		
9	165175 3		1	1		"O" ring		
10	188572 2		1	1		Spring		
11	188571 0		1	1		Relief valve		
12	166208 5		1	1		Spacer		
13	166218 6		1	1		Pin		
14	188570 8		1	1		Body		
15	166216 2		1	1		Drive shaft		
16	166214 8		1	1		Spacer plate and gear assembly		
17	166212 4		1	1		Pin		
18	166213 6		2	2		Pin		
19	166284 5		1	1		Woodruff key		
20	166215 0		1	1		End cap		
21	065248 7		2	2		Plain washer		
22	088664 6		2	2		Hex. cap screw		
23	188531 6		1	1		Charge pump assembly	0.7	Incl.figs.7 to 22

https://michelroger.be 97

HYDROSTATIC PUMP
POMPE HYDROSTATIQUE
HYDROSTATIK PUMPE
POMPA IDROSTATICA
HYDROSTATISCHE POMP

MODEL 8070 - 8080

Fig.	Order Ref.	CD	8070	8080	Code	Description	N.B.
1	065248 7		2	2		Plain washer	
2	188531 6		1	1		Charge pump assy	For details see group 35
3	065248 7		13	13		Washer	
4	088645 6		4	4		Hex. cap screw	
5	165214 7		1	1		Gasket, Charge pump	
6	087178 4		3	3		Hex. cap screw	
7	087870 2		5	5		Hex. cap screw	
8	087363 7		9	9		Washer	
9	163094 9		2	2		Check valve assembly	Incl.fig.10
10	165212 3		2	2		"O" ring	
11	396328 7		1	1		End cap	
12	188543 1		1	1		Gasket, End cap	
13	188542 9		AR	AR		Shim	Thickness 0,10 mm
14	188544 3		1	1		Rear bearing	
15	396329 9		1	1		Valve plate	
16	165181 6		1	1		Pin	
17	188546 7		1	1		Bearing plate	
18	188547 9		1	1		Pilot	
19	188548 1		1	1		Retaining ring	
20	188549 3		1	1		Spring retainer	
21	188550 6		1	1		Spring guide	
22	188551 8		1	1		Spring, Cylinder block	
23	188552 0		1	1		Spring seat	
24	396347 7		6	6		Retaining spring	
25	165187 8		1	1		Pin	
26	396348 9		1	1		Cylinder block assy	
27	188555 6		1	1		Retainer guide	
28	188557 0		1	1		Slipper retainer	
29	188558 2		9	9		Piston assembly	
30	396349 1		1	1		Thrust plate	
31	188535 4		4	4		Plug	
32	166277 0		4	4		Screw, socket head	
33	165215 9		2	2		Sleeve retainer	
34	396344 1		2	2		Servo sleeve	
35	165216 1		2	2		"O" ring	
36	165217 3		2	2		"O" ring	
37	088503 6		2	2		Hex. cap screw	
38	166276 8		2	2		Washer	
39	165218 5		2	2		Spring guide	
40	165219 7		2	2		Servo spring	
41	188537 8		2	2		Servo piston	
42	165221 2		2	2		Pin	
43	165222 4		8	8		Clip	

https://michelroger.be 98

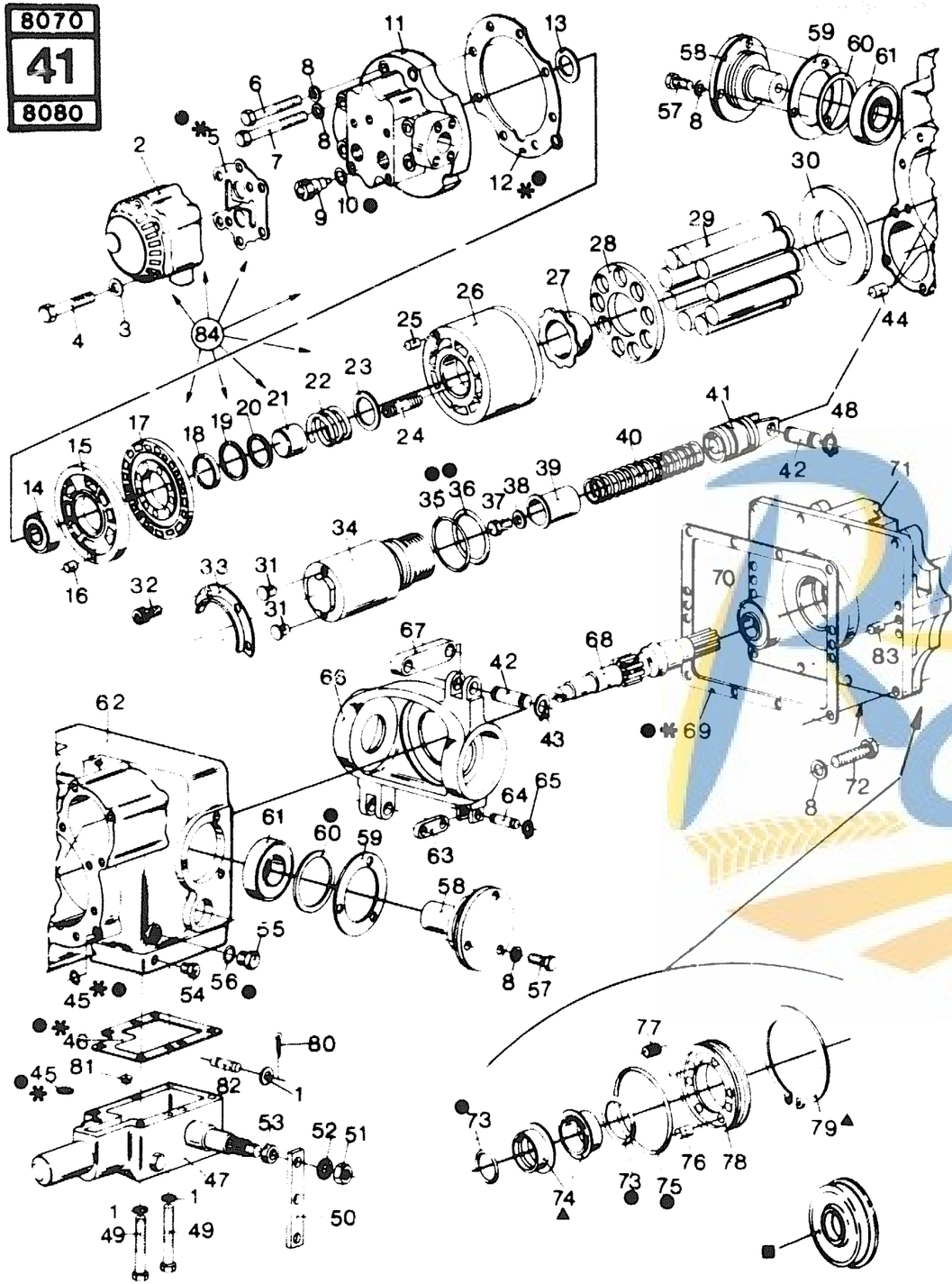

HYDROSTATIC PUMP
POMPE HYDROSTATIQUE
HYDROSTATIK PUMPE
POMPA IDROSTATICA
HYDROSTATISCHE POMP

MODEL 8070 - 8080

Fig.	Order Ref.	CD	8070	8080	Code	Description	N.B.
44	165179 1		4	4		Pin	
45	163093 7		4	4		"O" ring	
46	163089 8		1	1		Gasket, Control valve	
47	188533 0		1	1		Control valve assembly	For details see group 35
48	396345 3		2	2		Circlip	
49	087405 7		7	7		Hex. cap screw	
50	165207 2		1	1		Control lever	
51	084942 2		1	1		Hex. nut	
52	087552 8		1	1		Tooth lockwasher	
53	166479 8		1	1		Spacer	
54	080709 4		1	1		Plug	
55	166278 2		1	1		Plug	
56	165202 2		1	1		"O" ring	
57	396332 6		6	6		Hex. cap screw	
58	396333 8		2	2		Trunnion	
59	396334 0		AR	AR		Shim	Thickness 0,10 mm
60	396335 2		2	2		"O" ring	
61	396336 4		2	2		Trunnion bearing	
62	396330 2		1	1		Pump housing	
63	165199 3		1	1		Link, Swash plate	
64	165197 9		1	1		Pin	
65	388663 7		2	2		Circlip	
66	396350 4		1	1		Swash plate	
67	396346 5		4	4		Servo link	
68	443536 6		1	1		Drive shaft	
69	396337 6		1	1		Gasket, Front cover	
70	188560 7		1	1		Front bearing	
71	396338 8		1	1		Front cover	
72	396339 0		12	12		Hex. cap screw	
73	396342 7		2	2		"O" ring	
74	396341 5		1		347	Seal	
	396341 5			1	329	Seal	
75	396343 9		1		347	"O" ring	
	396343 9			1	329	"O" ring	
76	163086 2		6		347	Seal spring	
	163086 2			6	329	Seal spring	
77	165228 6		1		347	Groove pin	
	165228 6			1	329	Groove pin	
78	188564 5		1		347	Seal retainer	
	188564 5			1	329	Seal retainer	
79	188565 7		1		347	Circlip	
	188565 7			1	329	Circlip	

MICHEL ROGER

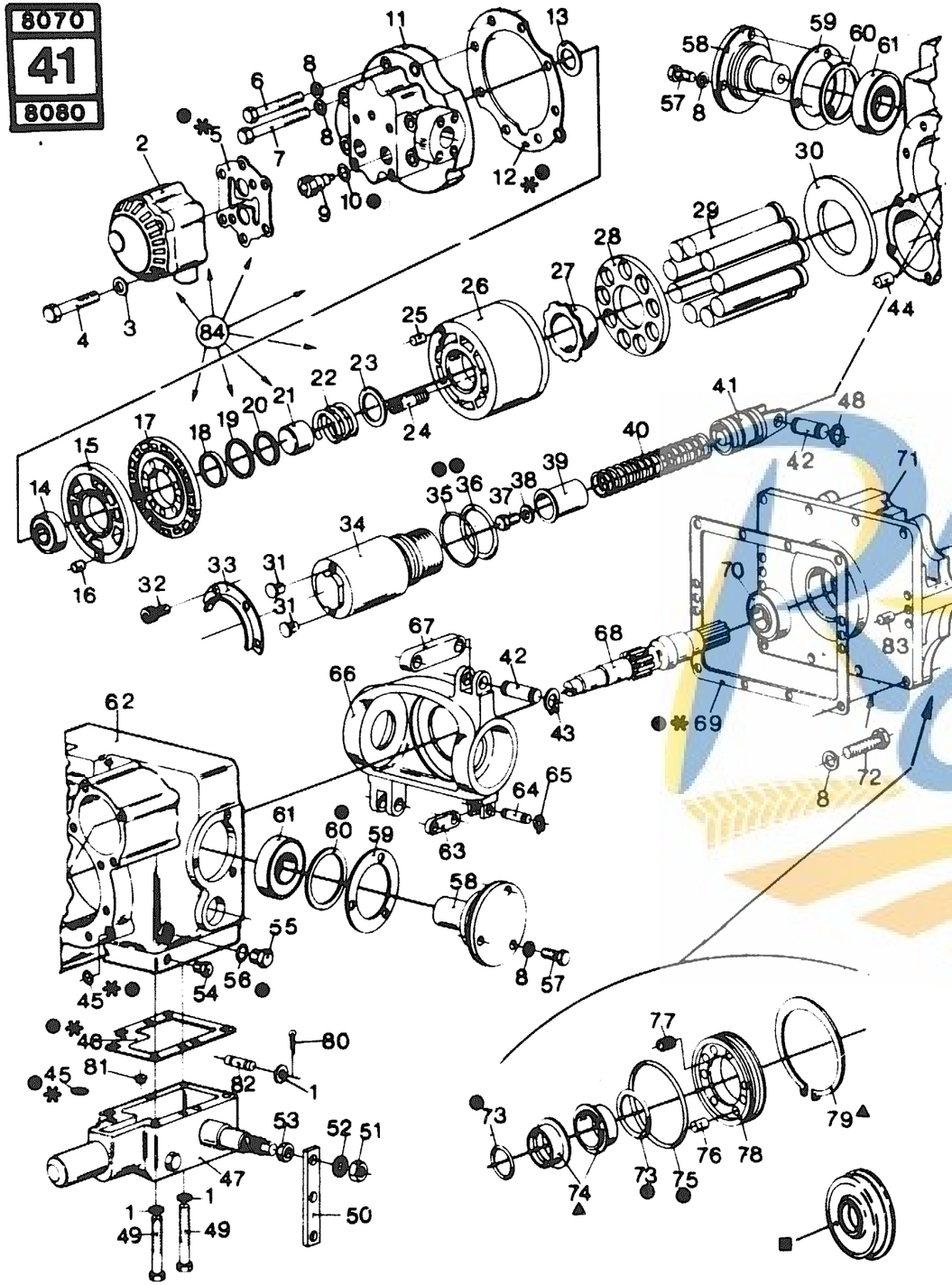

HYDROSTATIC PUMP
POMPE HYDROSTATIQUE
HYDROSTATIK PUMPE
POMPA IDROSTATICA
HYDROSTATISCHE POMP

MODEL 8070 - 8080

Fig.	Order Ref.	CD	8070	8080	Code	Description	N.B.
80	081858	0	1	1		Cotter pin	
81	188534	2	1	1		Orifice plate	
82	163091	3	1	1		Pin	
83	165179	1	2	2		Pin	
84	391591	9	1	1		Hydrostatic pump assy	Incl.all ref.
*	396353	0	1	1		Mounting seal kit	Incl.figs. 5,12,45,46 and 69
●	396354	2	1	1		Seal kit	Incl.figs. 5,10,12,35,36,45,46,56, 60,69,73 and 75
▲	385937	5	1		347	Wear kit	Incl.figs. 74 and 79
	385937	5		1	329	Wear kit	
■	449103	5	1		44	Seal kit assy	
	449103	5		1	39	Seal kit assy	

Michel ROGER

Michel ROGER GROUP

42 ➧ 48

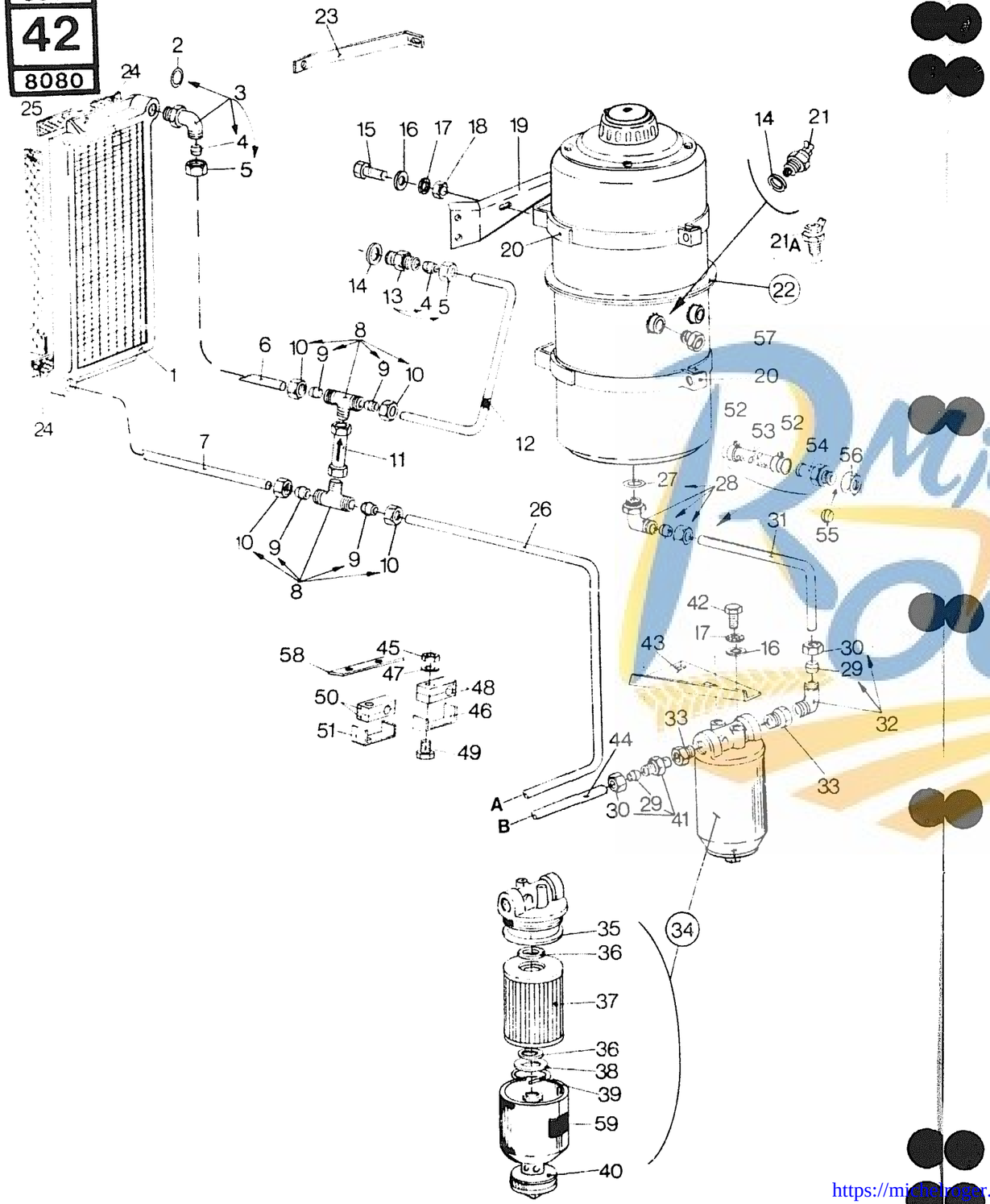

HYDROSTATIC FILTER & RESERVOIR
FILTRE & RESERVOIR
FILTER & BEHÄLTER
FILTRO E SERBATOIO D'OLIO
FILTER & OLIEBEHOUDER

HYDROSTATIC DRIVE

MODEL 8070 - 8080

Fig.	Order Ref.	CD	8070	8080	Code	Description		N.B.
1	388794	4	1	1		Oil cooler	2.6	
2	167266	8	AR	AR		"O" ring		
3	353096	3	4	4		Elbow		Incl. figs. 2, 4 and 5
4	325339	5	AR	AR		Ferrule		
5	325338	3	AR	AR		Coupler nut		
6	395024	2	1	1		Hydraulic pipe		
7	395023	0	1	1		Hydraulic pipe		
8	353104	2	2	2		"T" connector		Incl. figs. 9 and 10
9	356170	4	AR	AR		Ferrule		
10	356169	1	AR	AR		Coupler nut		
11	163603	0	1	1		Cneck valve	0.8	
12	395026	6	1	1		Hydraulic pipe		
13	420864	4	1	1		Connector		
14	220050	7	1	1		Seal washer		
15	120104	1	10	10		Hex. cap screw		
16	378243	5	18	18		Plain washer		
17	322358	2	15	15		Tooth lockwasher		
18	100015	8	20	20		Hex. nut		
19	398025	7	2		492	Bracket		
	449916	8	2		47	Bracket		
	398025	7		2		Bracket		
20	396402	5	2		492	Clamp		
	448859	5	2		47	Clamp		
	396402	5		2	330	Clamp		
	448859	5		2	40	Clamp		
21	368724	3	1	1		Sender, Oil temperature	0.5	
21A	437592	6	1			Sender, Oil temperature		Mercedes engines
	437706	9	1			Sender, Oil temperature		Fiat and Mercedes engines
22	378856	4	1		492	Oil reservoir	1.9	For details see group 35
	449961	3	1		47	Oil reservoir		For details see group 35
	378856	4		1	330	Oil reservoir		For details see group 35
	449961	3		1	40	Oil reservoir		For details see group 35
23	422405	4	1		492	Bracket		
	449915	6	1		47	Bracket		
	422405	4		1		Bracket		
24	391320	6	2	2		Sealing strip		
25	326870	2	1	1		Sealing strip		
26	434119	1	1		492	Hydraulic pipe		
	+		1		47	Hydraulic pipe		
	434119	1		1	330	Hydraulic pipe		
	+			1	47	Hydraulic pipe		

ROGER
Michel
https://michelroger.be 102

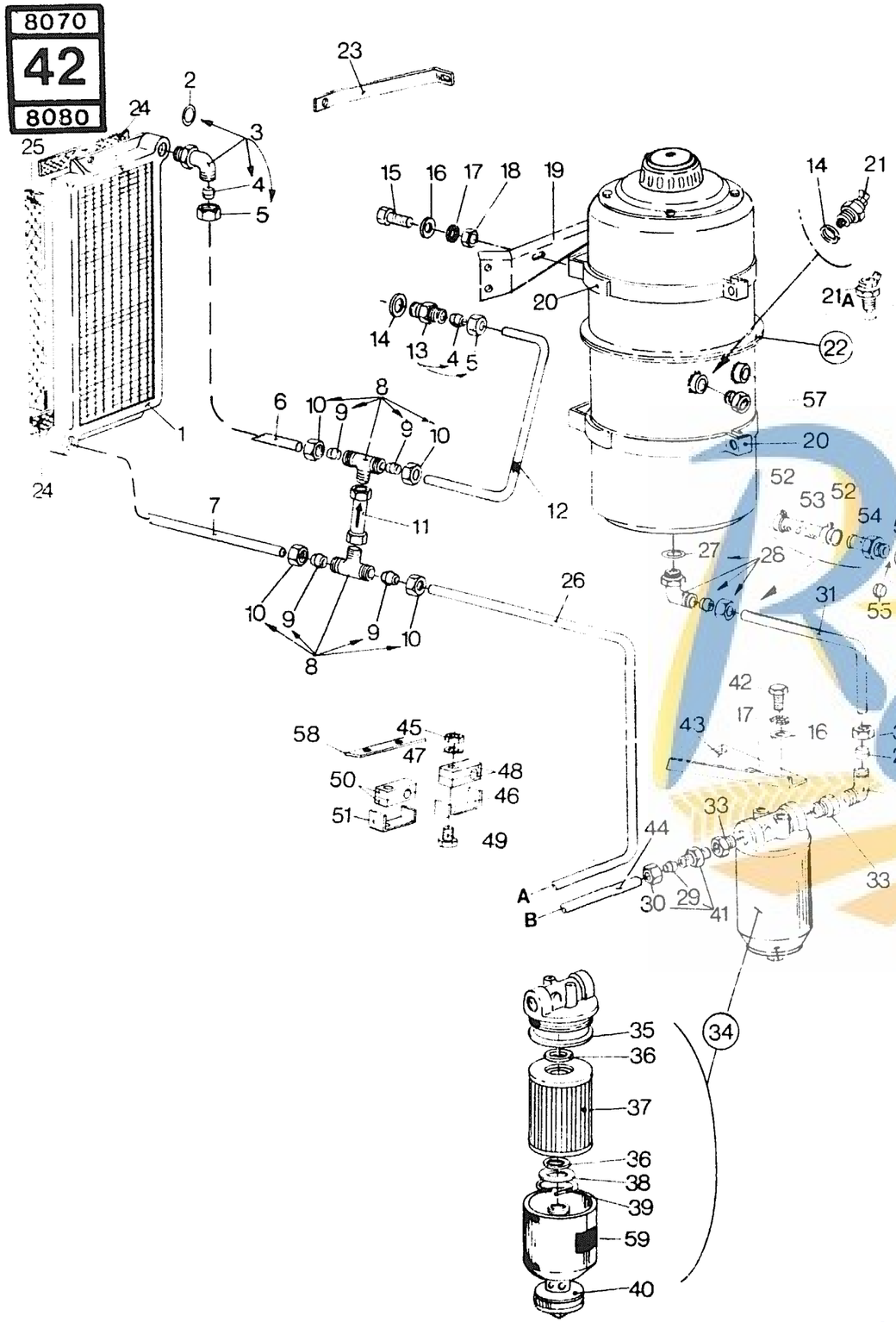

156

HYDROSTATIC FILTER & RESERVOIR
FILTRE & RESERVOIR
FILTER & BEHÄLTER
FILTRO E SERBATOIO D'OLIO
FILTER & OLIEBEHOUDER

HYDROSTATIC DRIVE

MODEL 8070 - 8080

Fig.	Order Ref.	CD	8070	8080	Code	Description	N.B.
27	167268 2		1		492	"O" ring	0.9
	167266 8		1		47	"O" ring	
	167268 2			1	330	"O" ring	
	167266 8			1	40	"O" ring	
28	390836 8		1		492	Elbow	Incl. figs. 29 and 30
	450594 7		1		47	Elbow	
	390836 8			1	330	Elbow	Incl. figs. 29 and 30
	450594 7			1	40	Elbow	
29	353105 4		AR	AR		Ferrule	
30	353106 6		AR	AR		Coupler nut	
31	434101 4		1		492	Hydraulic pipe	
	452493 5		1		47	Hydraulic pipe	
	434101 4			1	330	Hydraulic pipe	
	452493 5			1	40	Hydraulic pipe	
32	391145 4		1	1		Elbow	Incl. figs. 29 and 30
33	353100 4		2	2		Adaptor	
34	144129 1		1	1		Oil filter	Incl. figs. 35 to 40
35	165241 4		1	1		"O" ring	
36	181211 1		2	2		"O" ring	
37	181212 3		1	1		Filter element	Incl. fig. 36
38	165238 7		1	1		Washer	
39	165239 9		1	1		Spring	
40	165240 2		1	1		Seal washer	
41	353095 1		1	1		Straight connector	Incl. figs. 29 and 30
42	087872 6		1	1		Hex. cap screw	
43	391484 2		1	1		Mounting plate	
44	434109 0		1	1		Hydraulic pipe	
45	412152 5		2	2		Hex. lock nut	
46	433099 6		1	1		Clamp bracket	
47	140015 6		2	2		Plain washer	
48	433006 1		2	2		Clamp	
49	338413 8		2	2		Hex. cap screw	
50	433007 3		2	2		Clamp	
51	433100 1		1	1		Clamp bracket	
52	382527 3		2		47	Hose clamp	
	382527 3			2	40	Hose clamp	
53	452497 3		1		47	Hydraulic hose	
	452497 3			1	40	Hydraulic hose	
54	445033 2		1		47	Connector	
	445033 2			1	40	Connector	
55	353105 4		1		47	Ferrule	
	353105 4			1	40	Ferrule	

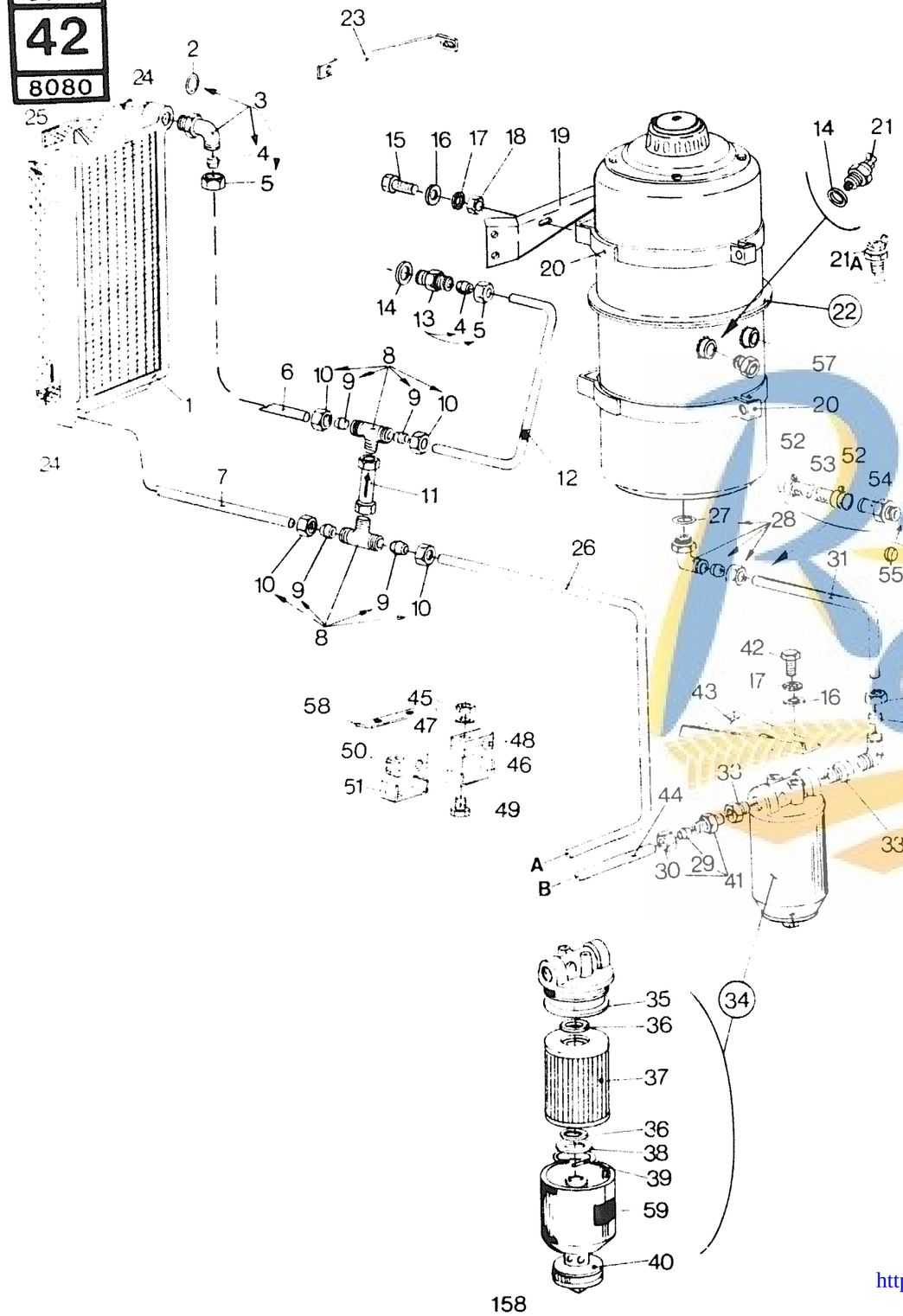

HYDROSTATIC FILTER & RESERVOIR
FILTRE & RESERVOIR
FILTER & BEHÄLTER
FILTRO E SERBATOIO D'OLIO
FILTER & OLIEBEHOUDER

Fig.	Order Ref.	CD	8070	8080	Code	Description	N.B.
56	353106 6		1		47	Coupler nut	
	353106 6			1	40	Coupler nut	
57	449884 9		1		47	Adapter	
	449884 9			1	40	Adapter	
58	451050 6		1		47	Bracket	
	451050 6			1	40	Bracket	
59	750208 3		1	1		Decal	

Michel ROGER

https://michelroger.be 104

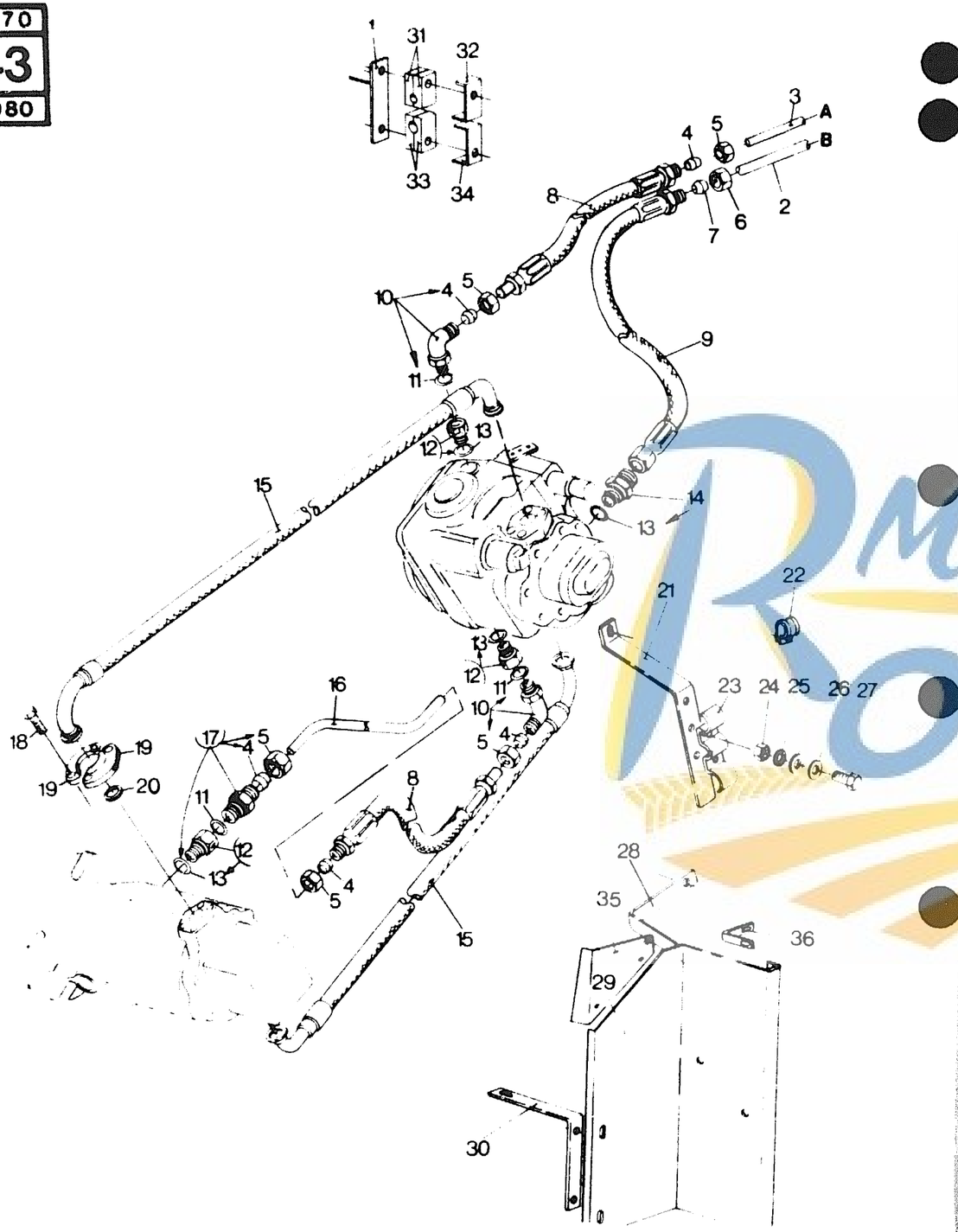

HYDROSTATIC LINES
TUYAUTERIE HYDROSTATIQUE
LEITUNGEN HYDROSTATIK
CONDUTTURE IDROSTATICHE
LEIDING HYDROSTATIEK

MODEL 8070 - 8080

Fig.	Order Ref.	CD	8070	8080	Code	Description		N.B.
1	434099 7		1	1		Plate		
2	434109 0		1	1		Hydraulic pipe		
3	434119 1		1	1		Hydraulic pipe		
4	325339 5		AR	AR		Ferrule		
5	325338 3		AR	AR		Coupler nut		
6	353106 6		AR	AR		Coupler nut		
7	353105 4		AR	AR		Ferrule		
8	353093 7		2	2		Hydraulic hose	0.8	
9	353094 9		1	1		Hydraulic hose		
10	353096 3		1	1		Elbow		Incl.figs.4 5 and 11
11	167266 8		AR	AR		"O" ring		
12	353097 5		3	3		Adapter		incl.fig.13
13	167269 4		1	1		"O" ring		
14	353099 9		1	1		Connector assembly		Incl.fig.13
15	411696 6		2	2		Hydraulic hose	0.9	
16	417675 8		1	1		Hydraulic pipe		
17	323473 7		1	1		Connector assembly		Incl.figs.4,5 and 13
18	088011 3		16	16		Hex. cap screw		
19	366239 2		8	8		Flange half	0.7	
20	353108 0		4	4		"O" ring		
21	419798 0		1	1		Bracket		
22	335021 4		5	5		Clamp		
23	394016 4		1	1		Clamp		
24	100067 7		2	2		Hex. nut		
25	322358 2		8	8		Tooth lockwasher		
26	378243 5		8	8		Plain washer		
27	120161 1		8	8		Hex. cap screw		
28	411792 0		1		845	Bracket		
	456080 4		1		59	Bracket		
	411792 0			1	519	Bracket		
	456080 4			1	48	Bracket		
29	411793 2		1		845	Guard		
	444450 5		1		59	Guard		
	411793 2			1	519	Guard		
	444450 5			1	48	Guard		
30	393096 1		1		845	Bracket		
	442806 8		1		59	Bracket		
	393096 1			1	519	Bracket		
	442806 8			1	48	Bracket		
31	433007 3		2	2		Clamp		
32	433100 1		1	1		Clamp bracket		
33	433006 1		2	2		Clamp		
34	433099 6		1	1		Clamp bracket		
35	442891 7		1		59	Plate		
	442891 7			1	48	Plate		
36	442570 7		1		59	Bracket		
	442570 7			1	48	Bracket		

Michel Roger

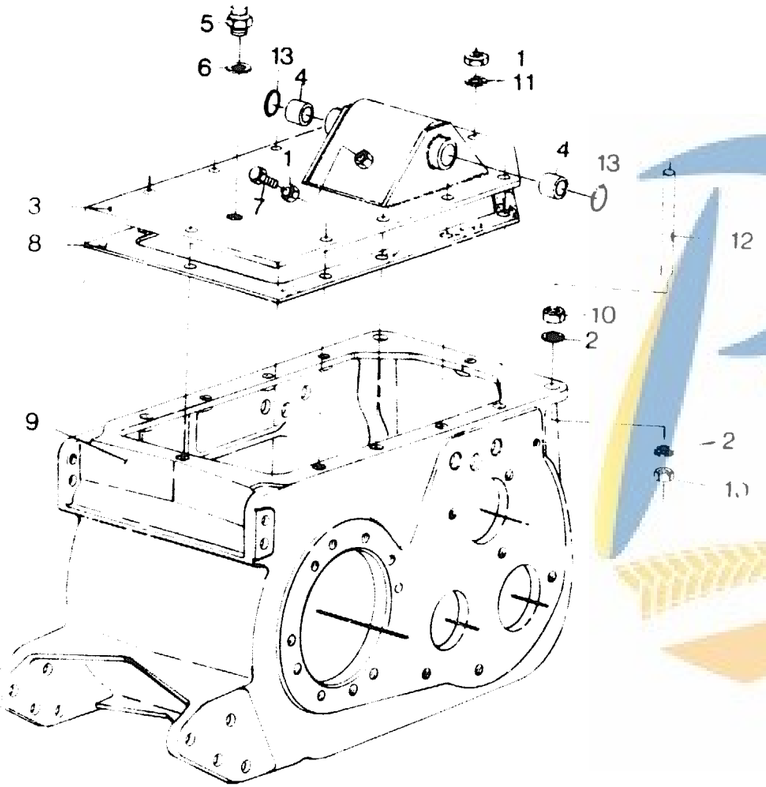

TRACTION GEARBOX
BOITE DE VITESSE
SCHALTGETRIEBE
CAMBIO DI VELOCITA
VERSNELLINGSKAST

MODEL 8070 - 8080

Fig.	Order Ref.	CD	8070	8080	Code	Description	N.B.
1	100016	0	1	1		Hex. nut	
2	140048	5	8	8		Tooth lockwasher	
3	430937	1	1	1		Cover	Incl.fig.4
4	210026	4	4		347	Bushing	2.3
	382975	2	4		44	Bushing	
	210026	4		4	329	Bushing	
	382975	2		4	39	Bushing	
5	398136	2	1	1		Breather plug	
6	220025	4	2	2		Seal washer	
7	120112	8	1	1		Hex. cap screw	
8	430783	4	1	1		Gasket	
9	430433	3	1		844	Gear box	
	456744	2	1		58	Gearbox housing	
	430433	3		1	491	Gearbox housing	
	456744	2		1	47	Gearbox housing	
10	100020	9	8	8		Hex. nut	
11	140045	9	8	8		Tooth lockwasher	
12	110057	8	2	2		Stud	
13	027286	1	2	2		"O" ring	

Michel ROGER

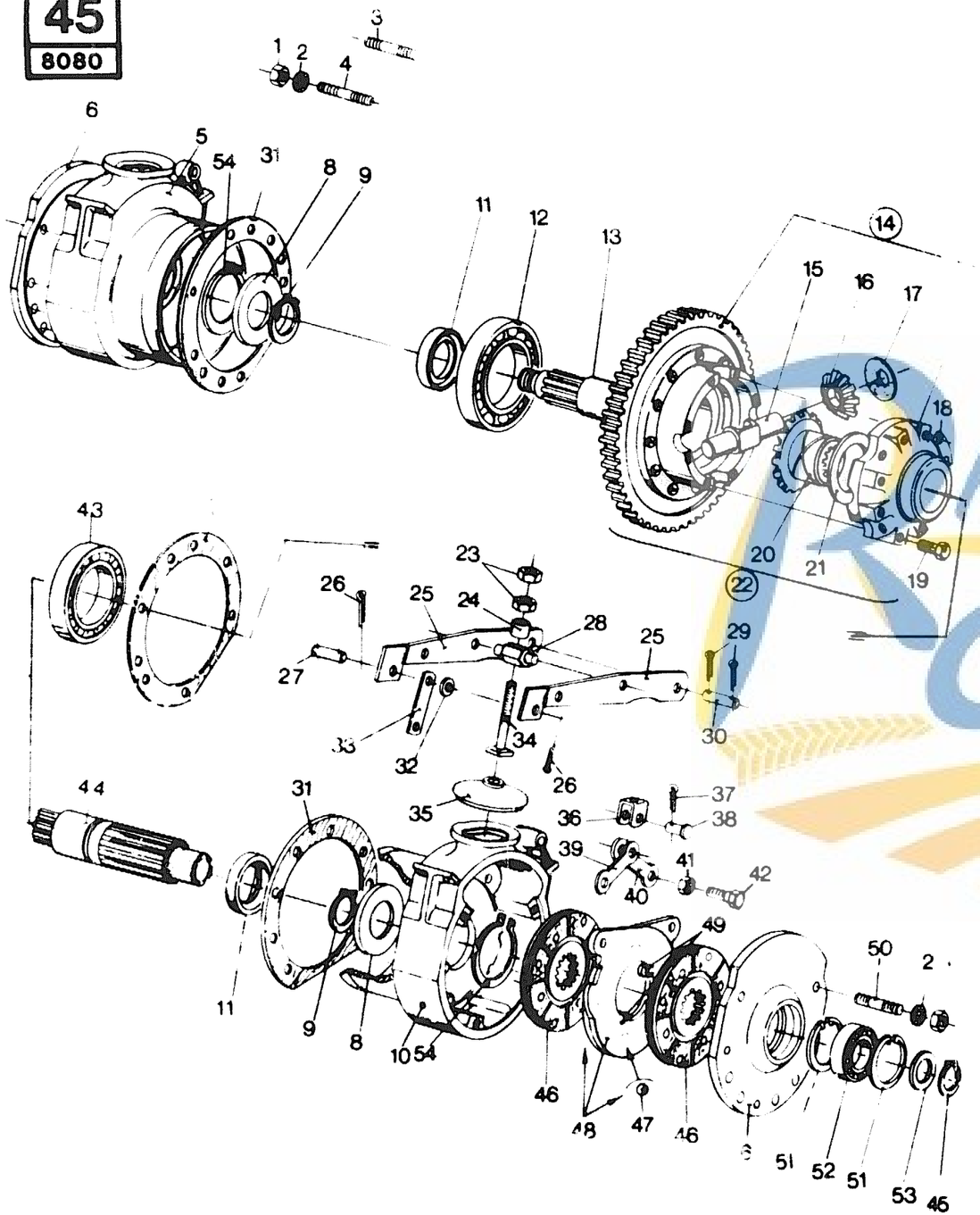

BRAKES
FREINS
BREMSEN
FRENI
REMMEN

MODEL 8070 - 8080

Fig.	Order Ref.	CD	8070	8080	Code	Description		N.B
1	337475 7		4	4		Hex. nut		
2	140046 1		4	4		Tooth lockwasher		
3	431088 1		1	1		Stud		
4	353720 8		1	1		Stud		
5	430695 7		1	1		Brake housing		
6	381511 9		2	2		Cover		
7	420392 3		2	2		Gasket		
8	430936 9		2	2		Ring		
9	382102 3		2	2		Circlip		
10	430436 7		1	1		Brake housing, LH		
11	381858 3		2	2		Oil seal	3.0	
12	210046 6		1	1		Ball bearing	15.5	
13	431988 9		1	1		Differential shaft	2.8	
14	434241 0			1	325	Differential housing		Matched set incl. both halves
	434241 0		1		342	Differential housing		Matched set incl. both halves
	437778 0			1	35	Differential housing		Matched set incl. both halves
	437778 0		1		39	Differential housing		Matched set incl. both halves
15	410007 6		2	2		Shaft		
16	410006 4		4	4		Pinion		
17	210014 9		4	4		Dished washer	15 5	
18	331649 0		4	4		Locking plate		
19	120073 4		8	8		Hex. cap screw		
20	410034 3		2	2		Planet pinion		
21	210013 7		2	2		Thrust ring		
22	434240 8			1	325	Differential		Incl.figs.14 to 21
	434240 8		1		342	Differential		Incl.figs.14 to 21
	437777 8			1	35	Differential		Incl.figs.14 to 21
	437777 8		1		39	Differential		Incl.figs.14 to 21
23	323238 9		4	4		Hex. jam nut		
24	200091 9		2		325	Bushing		
	200086 8			2	35	Bushing		
	200086 8		2			Bushing		
25	430891 3		4	4		Lever	0.7	
26	130003 9		4	4		Cotter pin		
27	390017 2		2	2		Pivot pin		
28	482282 4		2	2		Hinge piece		
29	130005 3		4	4		Cotter pin		
30	390022 3		2	2		Pivot pin	0 5	
31	420392 3		4	4		Gasket		
32	378244 7		2	2		Plain washer		
33	336746 1		1		345	Connecting link	0.7	
	336746 1			1	326	Connecting link		

https://michelroger.be

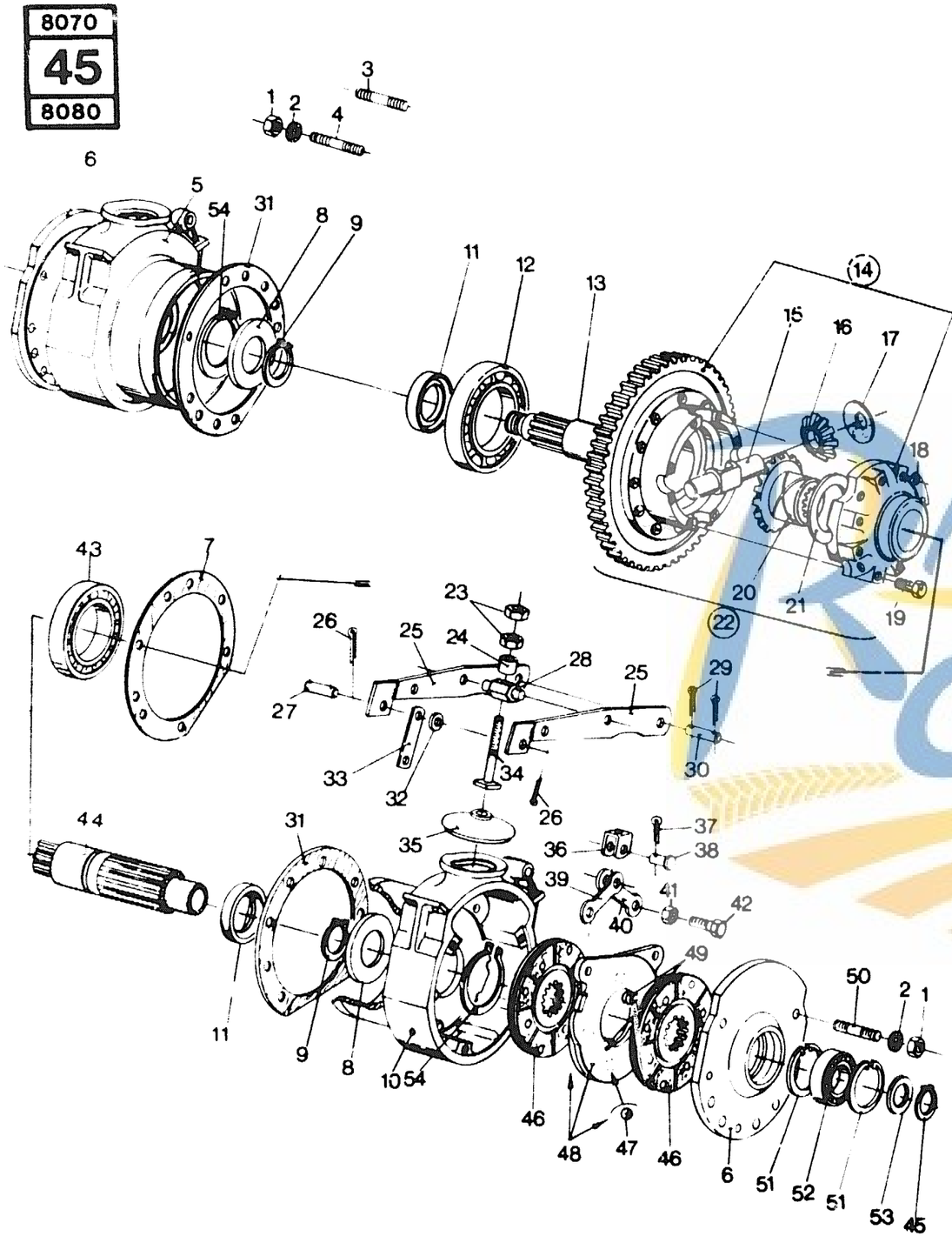

BRAKES
FREINS
BREMSE
FRENI
REMMEN

Fig.	Order Ref.	CD	8070	8080	Code	Description		N.B
34	410418 7		2	2		Adjusting rod		
35	353718 3		2	2		Dust cap	2.0	
36	357300 2		2	2		Clevis		
37	130002 7		2	2		Cotter pin		
38	375297 5		2	2		Clevis pin		
39	357298 5		2	2		Lever		
40	357299 7		4	4		Lever		
41	087308 1		2	2		Hex. jam nut		
42	357294 7		2	2		Hex. cap screw		
43	321951 9		1	1		Ball bearing	15.5	
44	431989 1		1	1		Differential shaft	2.8	
45	370007 7		2	2		Circlip		
46	381512 1		4	4	865	Brake disc assy	2.3	
	9508667 9		4	4	868	Brake disc assy	2.3	
	9512098 8		4		76	Brake disc assy		
47	210001 2		10	10		Steel ball	2.7	Incl. figs. 47, 49, 34, 36 to 42
48	410419 9		2	2		Activating disc		
49	357295 9		6	6		Spring		
50	353720 8		2	2		Stud		
51	300633 0		4	4		Circlip	0.9	
52	412451 9		2	2		Ball bearing	1.3	
53	385913 5		2	2		Washer		
54	370013 0		2	2		Circlip		

https://michelroger.be 108

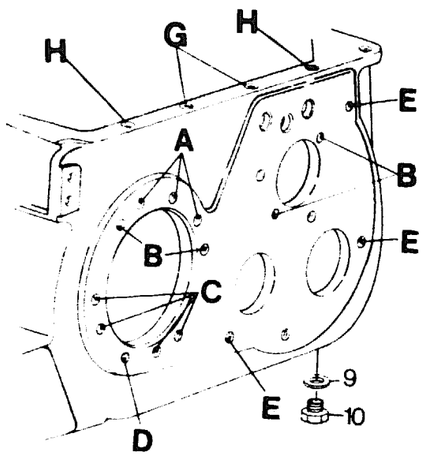

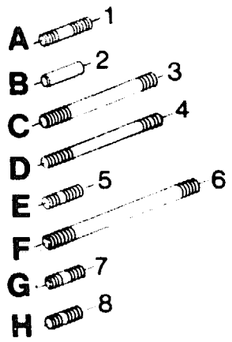

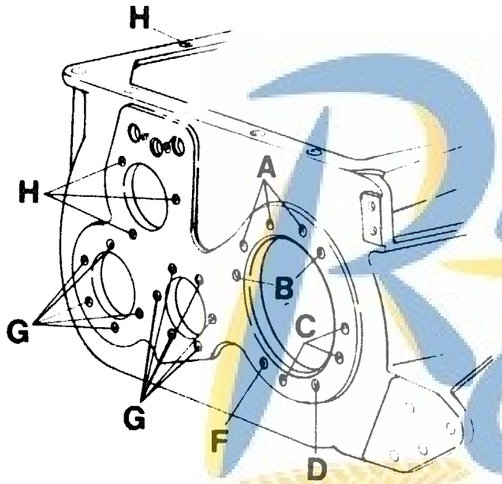

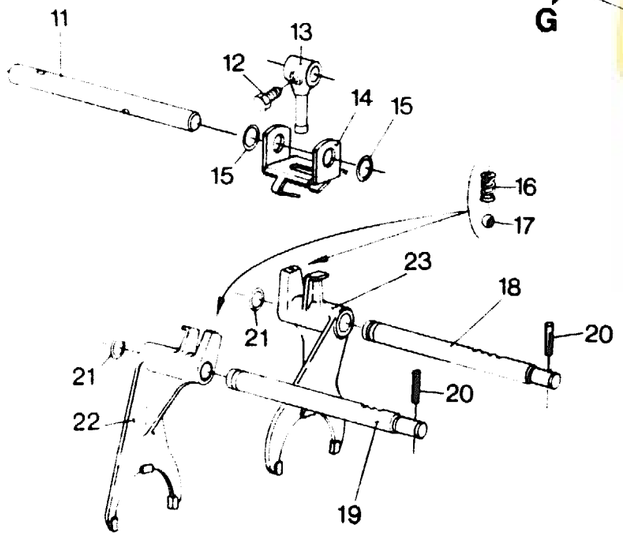

GEAR SELECTOR GROUP AND GEARBOX STUDS
COMMANDE DES PIGNONS DE COMMANDE ET GOUJONS
BEDIENUNG VON ANTRIEBSZAHNRÄDER UND STEHBOLZEN
COMANDO DEI PIGNONI DI COMANDO E BULLONI
BEDIENING AANDRIJFTANDWIELEN & DRAADEINDEN

MODEL 8070 - 8080

Fig.	Order Ref.	CD	8070	8080	Code	Description	N.B.
1	430945	8	6	6		Stud	
2	322423	1	6	6		Dowel	
3	110107	5	7	7		Stud	
4	430946	0	2	2		Centre pin	
5	321665	2	3	3		Centre pin	
6	430944	6	1	1		Stud	
7	110020	1	15	15		Stud	
8	110019	8	9	9		Stud	
9	220025	4	1	1		Seal washer	
10	336897	0	1	1		Plug	
11	382228	9	1	1		Shaft	2.3
12	120151	0	1	1		Lock screw	
13	382229	1	1	1		Level	2.3
14	382236	6	1	1		Lock	
15	027286	1	2	2		"O" ring	
16	180012	8	2	2		Spring	2.9
17	210006	2	2	2		Ball	2.9
18	430772	1		1	326	Shifter shaft	3rd and 4th gear
	430772	1	1		344	Shifter shaft	
	440784	8		1	36	Shifter shaft	2.9 3rd and 4th gear
	440784	8	1		41	Shifter shaft	
19	436422	6	1	1		Shifter shaft	1st and 2nd gear
20	300872	6	2	2		Roll pin	
21	129979	3	2	2		"O" ring	
22	421477	4	1	1		Selector fork	2.9 1st and 2nd gear
23	421478	6	1	1		Selector fork	2.9 3rd and 4th gear

https://michelroger.be 109

8070
47
8080

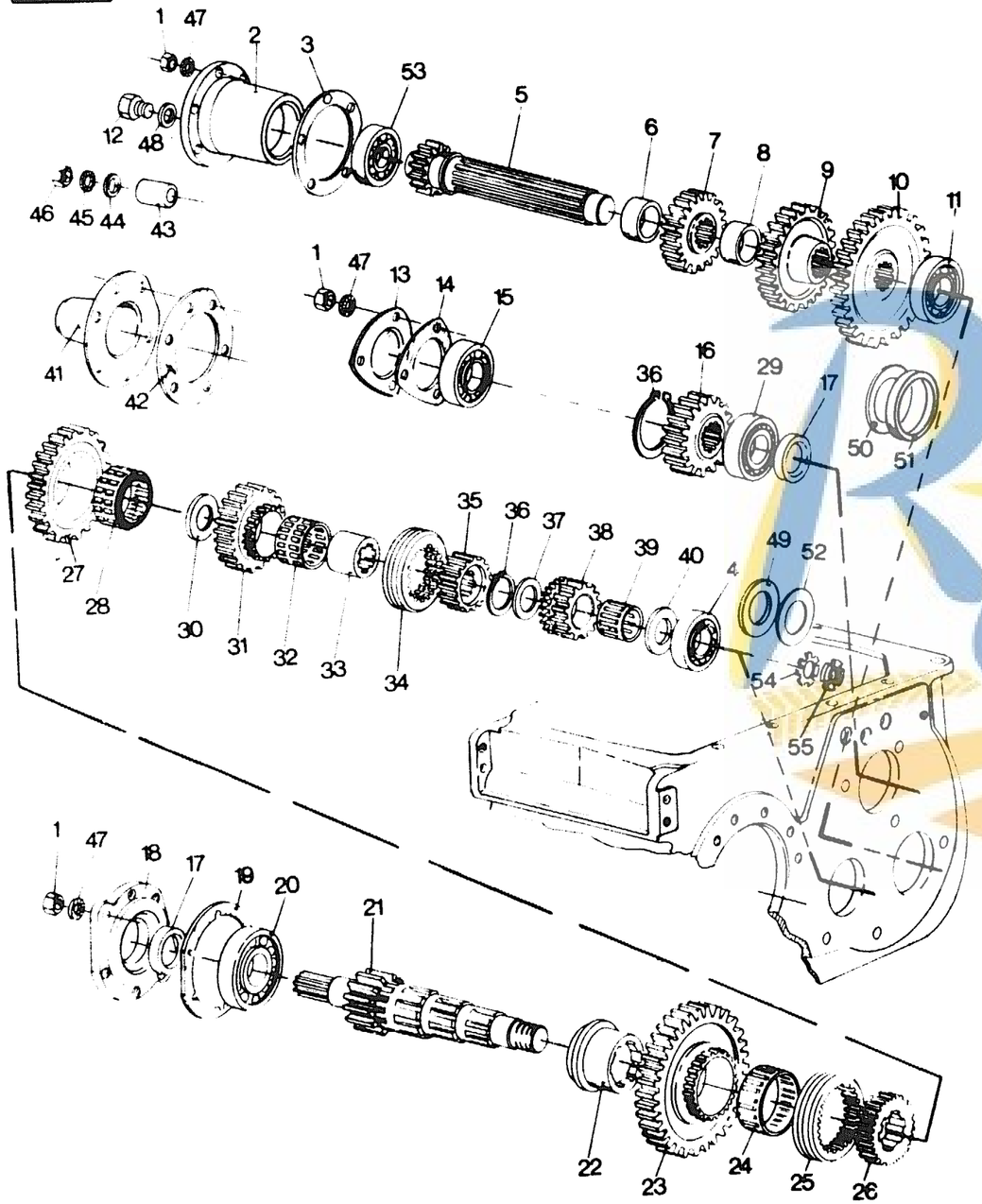

DRIVE GEARS
PIGNONS DE COMMANDE
ANTRIEBSZAHNRÄDER
COMANDO DEI PIGNONI DI COMANDO
AANDRIJFTANDWIELEN

MODEL 8070 - 8080

Fig.	Order Ref.	CD	8070	8080	Code	Description	N.B
1	100016 0		8	8		Hex. nut	
2	430661 6		1	1		Bearing housing	
3	394468 1		2	2		Gasket	
4	042449 6		1		492	Ball bearing	
	456665 4		1		691	Ball bearing	
	042449 6		1		802	Ball bearing	
	456331 7		1		56	Ball bearing	
	042449 6			1	330	Ball bearing	
	456665 4		1	1	447	Ball bearing	
	042449 6			1	450	Ball bearing	
	456331 7			1	45	Ball bearing	
5	384259 6		1	1		Gear shaft	8.3
6	394361 5		1	1		Bushing	
7	430513 3		1	1		Gear	
8	394359 0		1	1		Bushing	
9	430517 1		1	1		Gear	
10	384262 3		1	1		Gear	
11	423362 3		1	1		Ball bearing	
12	150006 9		1	1		Plug	
13	381934 5		1	1		Cover	
14	382225 3		2	2		Gasket	0.7
15	210048 0		1	1		Ball bearing	
16	395963 2		1	1		Gear	
17	388116 8		2	2		Oil seal	
18	423475 2		1		158	Flange	
	750847 7		1		73	Flange	0.8
	423475 2			1	619	Flange	
	750847 7			1	58	Flange	
19	382226 5		2	2		Gasket	
20	322365 7		1	1		Roller bearing	
21	421296 0		1		844	Gear shaft	
	456639 9		1		58	Gear shaft	
	421296 0			1	491	Gear shaft	
	456639 9			1	47	Gear shaft	
22	396121 9		1	1		Bearing bushing	
23	379674 9			1	326	Gear	
	379674 9		1		344	Gear	
	436457 9			1	36	Gear	
	436457 9		1		41	Gear	
24	396137 2			1		Needle bearing	
25	436357 7			1	326	Coupler ring	
	436357 7		1		344	Coupler ring	
	437870 6			1	36	Coupler ring	
	437870 6		1		41	Coupler ring	
26	396120 7		1	1		Gear	

https://michelroger.be

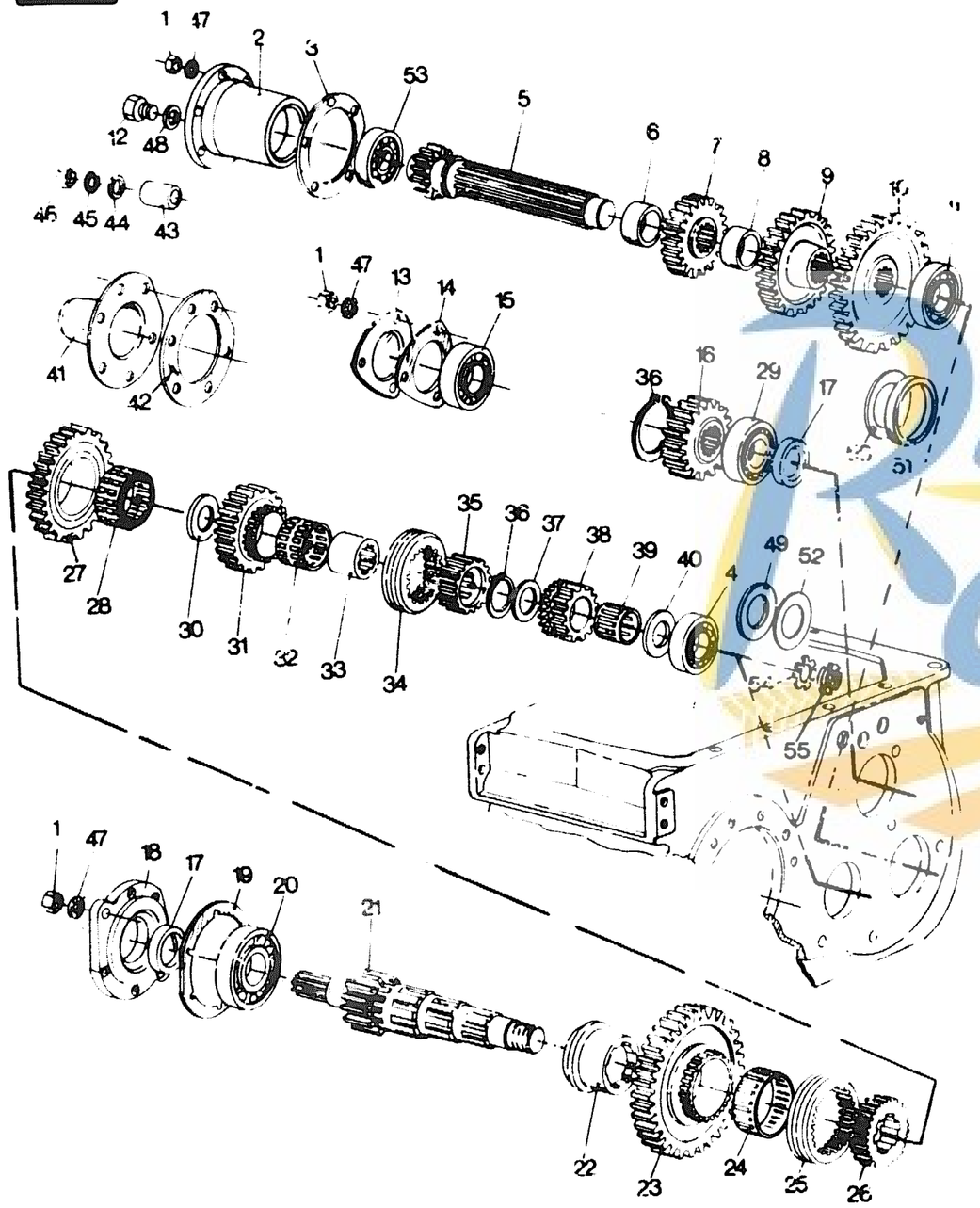

DRIVE GEARS
PIGNONS DE COMMANDE
ANTRIEBSZAHNRÄDER
COMANDO DEI PIGNONI DI COMANDO
AANDRIJFTANDWIELEN

MODEL 8070 - 8080

Fig.	Order Ref.	CD	8070	8080	Code	Description	N.B
27	4305157			1	326	Gear	
	4305157		1		344	Gear	
	4363589			1	36	Gear	
	4363589		1		41	Gear	
28	3961360		1	1		Needle bearing	8.3
29	0425436		1	1		Ball bearing	
30	3961170		1	1		Washer	
31	4305169			1	326	Gear	
	4305169		1		344	Gear	
	4364581			1	36	Gear	
	4364581		1		41	Gear	
32	3961358		1	1		Needle bearing	
33	3940289		1	1		Bushing	
34	4237633			1	326	Coupler ring	
	4237633		1		344	Coupler ring	
	4378693			1	36	Coupler ring	
	4378693		1		41	Coupler ring	
35	3961168		1	1		Gear	
36	3961384		2	2		Circlip	
37	3818278		1	1		Washer	
38	3818280			1	326	Gear	
	3818280		1		344	Gear	
	4364593			1	36	Gear	
	4364593		1		41	Gear	
39	3940277		1	1		Needle bearing	
40	3818269		1	1		Washer	
41	3976361		1	1		Cover	
42	3976359		1	1		Gasket	
43	2002191		2	2		Bushing	
44	3782459		2	2		Washer	
45	1400461		2	2		Tooth lockwasher	
46	3374757		2	2		Hex. nut	
47	1400459		4	4		Tooth lockwasher	
48	2200254		1	1		Seal washer	
49	4120333	AR			844	Shim washer	
	4126082	AR			58	Shim washer	
	4120333		AR		491	Shim washer	
	4126082		AR		47	Shim washer	
50	4121929	AR	AR			Shim washer	
51	4309648		1	1		Bushing	
52	4125650			2	844	Shim washer	
53	4232734		1	1		Ball bearing	
54	4123529		1		58	Lock washer	
	4123529			1	47	Lock washer	
55	4123517		1		58	Sleeve nut	
	4123517			1	47	Sleeve nut	

https://michelroger.be 111

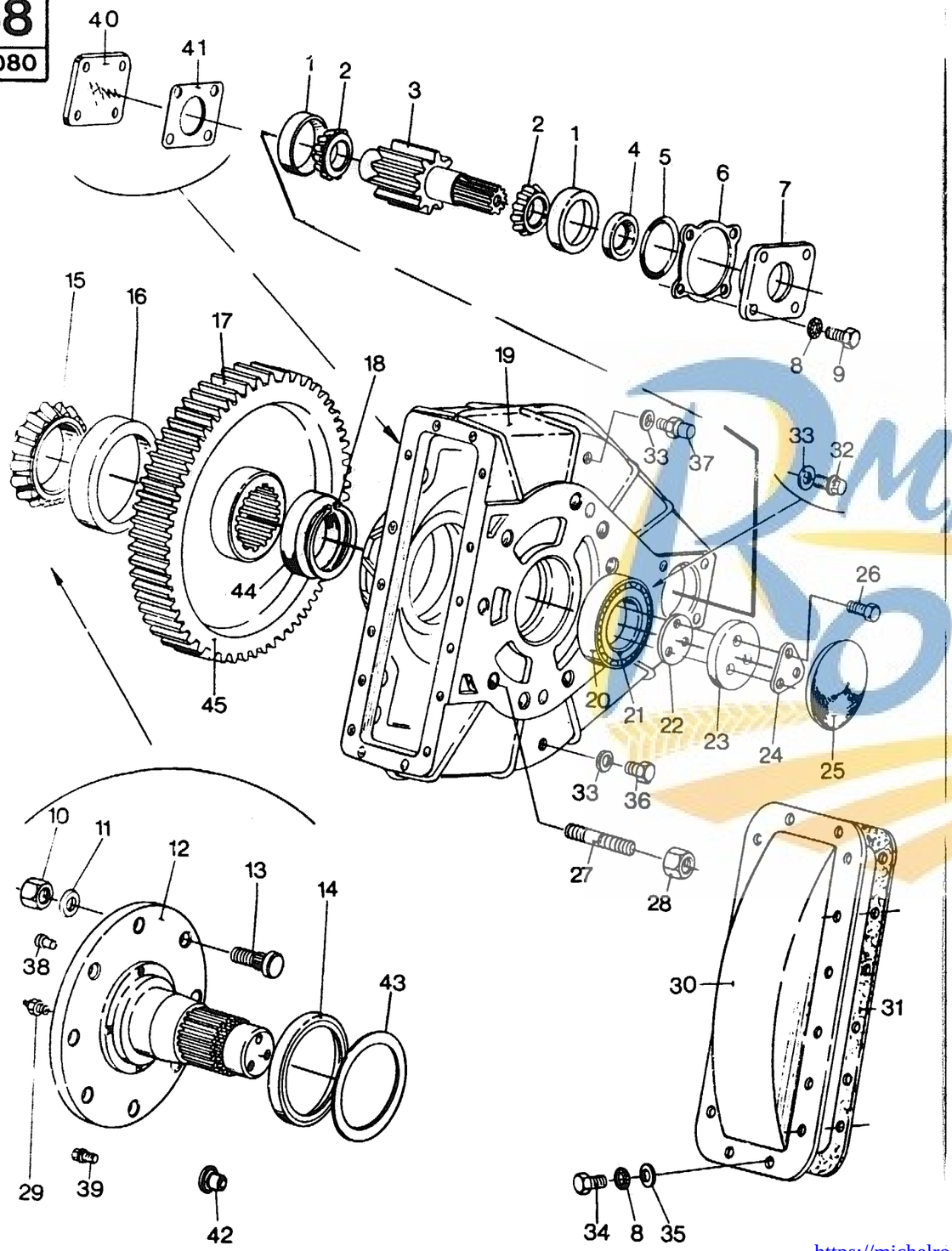

END REDUCTION
REDUCTION FINALE
ENDREDUKTION
RIDUZIONE FINALE
EINDREDUKTIE

MODEL 8070 - 8080

Fig.	Order Ref.	CD	8070	8080	Code	Description		N.B
1	384891 6		4	4		Bearing cup	] 6.9	
2	384890 4		4	4		Bearing cone		
3	381835 5		2	2		Gear shaft		
4	381860 8		2	2		Oil seal	] 0.9	
5	381895 1		2	2		"O" ring		
6	382948 5		AR	AR		Shim		0,127 mm (0.005")
	382949 7		AR	AR		Shim		0,177 mm (0,007")
	382950 0		AR	AR		Shim		0,508 mm (0.020")
7	410919 9		1	1		End cap		
8	140045 9		40	40		Tooth lockwasher		
9	120111 6		8	8		Hex. cap screw		
10	336945 3			16	609	Hex. nut		
	336945 3		16		848	Hex. nut		
	748961 5			16	51	Hex. nut		
	748961 5		16		64	Hex. nut		
11	335137 9			12	609	Conical washer		
	335137 9		12		848	Conical washer		
12	381689 4		2		341	Flanged shaft	]	
	438419 1		2		866	Flanged shaft		
	9510171 2		2		76	Flanged shaft	5.9	
	381689 4			2	325	Flanged shaft		
	438419 1			2	625	Flanged shaft		
	9510171 2			2	57	Flanged shaft		
13	330291 0		16	16		Wheel bolt	1.0	
14	381856 9		2	2		Oil seal	] 6.7	
15	381503 2		2	2		Bearing cone		
16	381508 2		2	2		Bearing cup	6.1	
17	383281 2			2		Gear		
18	300639 2		2	2		Circlip	5.5	
19	410917 5			2	325	Housing, End reduction		
	410917 5		2		341	Housing, End reduction		
	438420 4			2	379	Housing, End reduction		
	445438 0			2	43	Housing, End reduction		
	438420 4		2		498	Housing, End reduction		
	445438 0		2		47	Housing, End reduction		
20	147215 7		2	2		Bearing cup	6.1	
21	147216 9		2	2		Bearing cone	6.7	
22	395391 9		AR	AR		Shim plate		0,060 mm
	395392 1		AR	AR		Shim plate		0,127 mm (0.005")
	395393 3		AR	AR		Shim plate		0,508 mm (0.020")
23	382503 3		2	2		Retaining washer		
24	382499 2		2	2		Locking plate		

https://michelroger.be 112

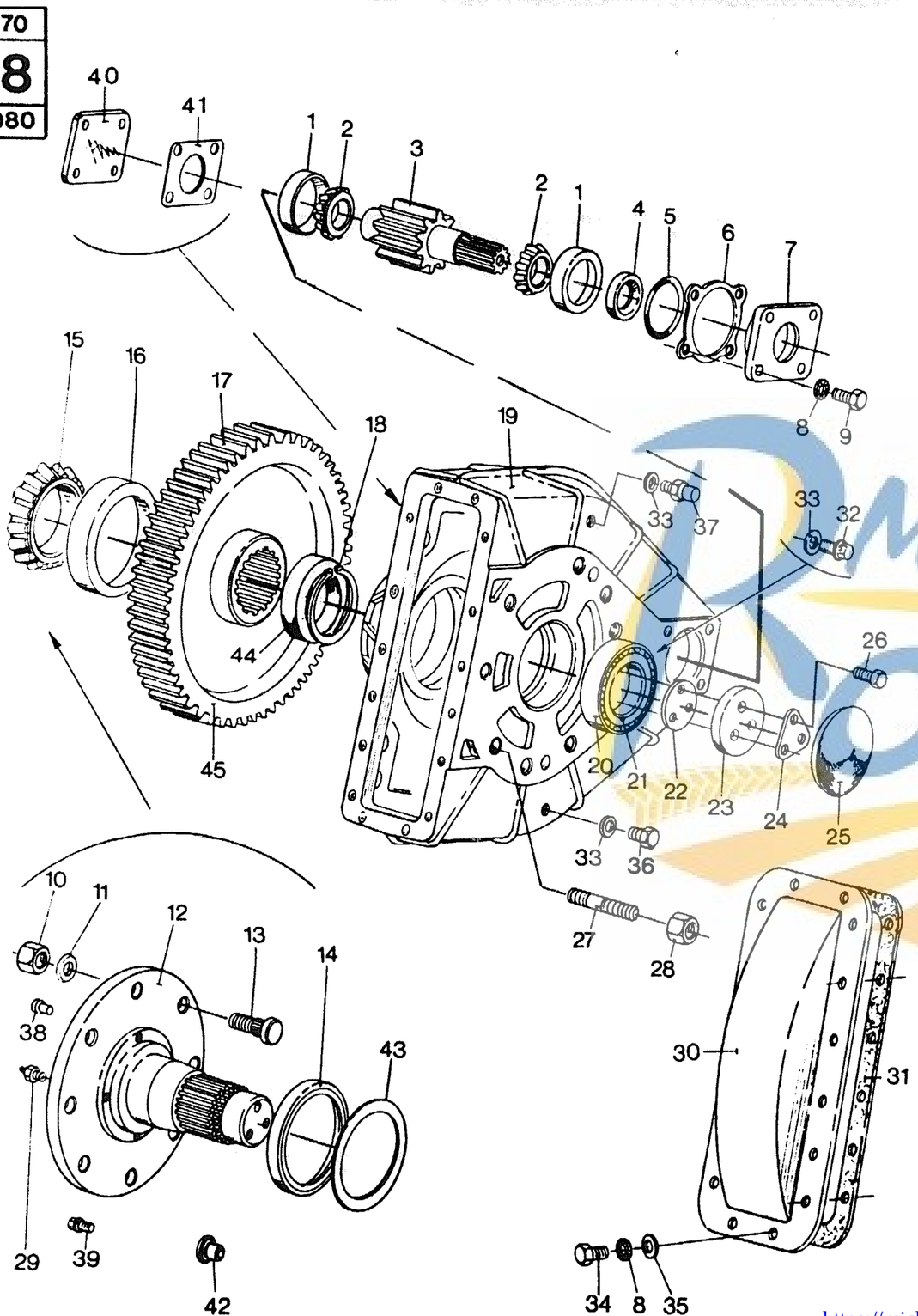

END REDUCTION
REDUCTION FINALE
ENDREDUKTION
RIDUZIONE FINALE
EINDREDUKTIE

Fig.	Order Ref.	CD	8070	8080	Code	Description	N.B
25	383230 5		2	2		Cap	
26	120256 2		6	6		Hex. cap screw	
27	412376 9		16	16		Stud	
28	100023 5		16	16		Hex. nut	
29	321204 6		4	4		Grease fitting	
30	382506 9			2	379	Cover	
	445439 2			2	503	Cover	
	457214 0			2	535	Cover	
	748076 8			2	48	Cover	
	382506 9		2		498	Cover	
	445439 2		2		760	Cover	
	457214 0		2		846	Cover	
	748076 8		2		59	Cover	
31	382504 5			2	379	Gasket	0.6
	445497 4			2	43	Gasket	
	382504 5		2		498	Gasket	
	445497 4		2		47	Gasket	
32	150006 9			2	325	Plug	
	150006 9		2		341	Plug	
	412413 9			2	35	Plug	
	412413 9		2		38	Plug	
33	220025 4			2		Seal washer	
	220025 4		2			Seal washer	
34	120109 1		32	32		Hex. cap screw	
35	140081 5		32	32		Plain washer	
36	336897 0		2	2		Magnetic plug	
37	386287 7		2	2		Breather	
38	384878 8		2	2		Plug	
39	378056 8		2	2		Screw	
40	410918 7		2	2		Cover	
41	410920 2		2	2		Gasket	
42	433630 4		4	4		Centre bushing	
43	428002 6			1	35	Spacer ring	
	428002 6		1		38	Spacer ring	
44	922092 4			1	56	Bushing	
	922092 4		1		72	Bushing	
45	918568 7		2		74	Gear	

https://michelroger.be 113

Michel ROGER GROUP

49 ▸ 55

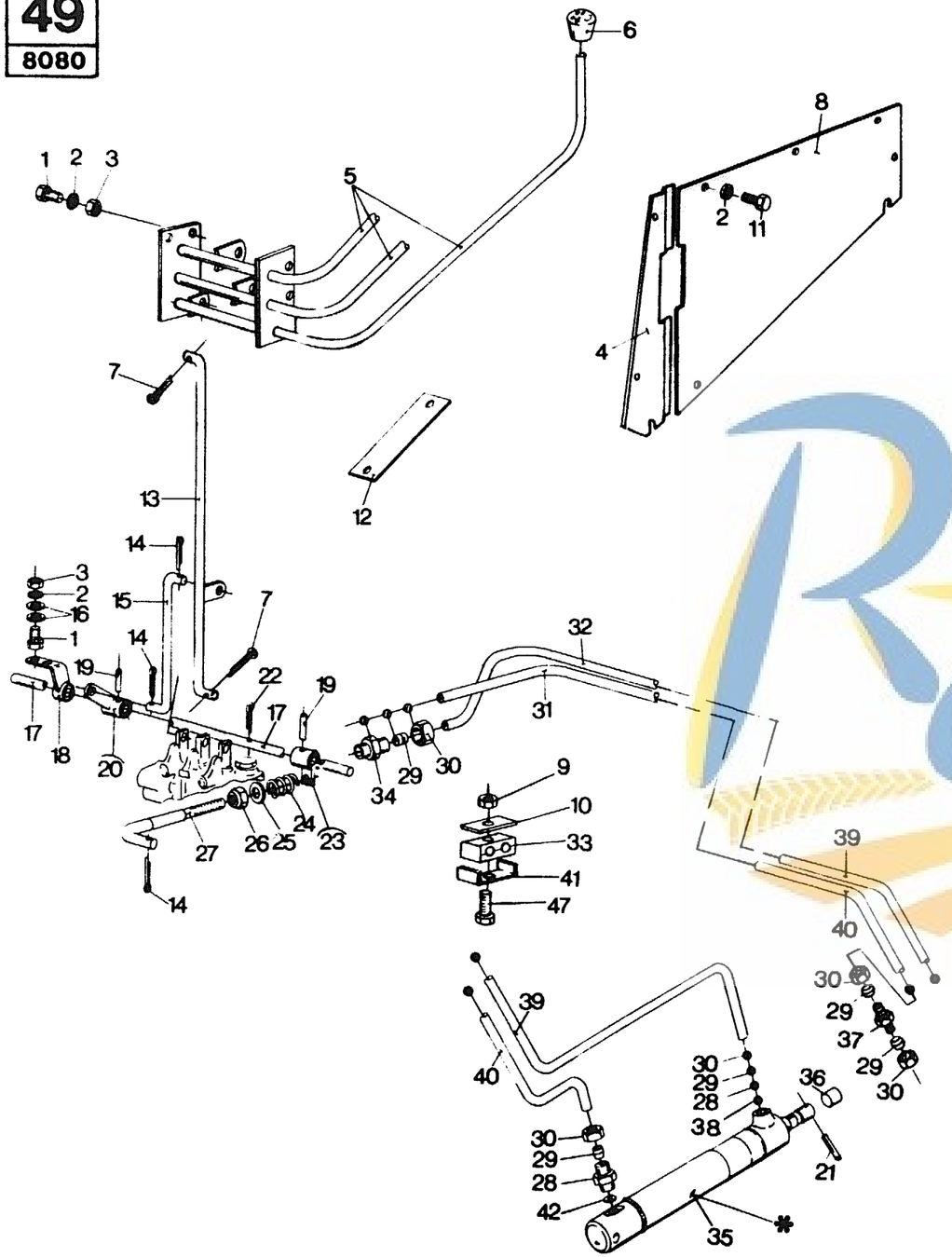

HYDRAULIC EQUIPMENT
EQUIPEMENT HYDRAULIQUE
HYDRAULISCHE AUSRÜSTUNG
IMPIANTO IDRAULICO
HYDRAULISCHE UITRUSTING

MECHANICAL DRIVE

MODEL 8070 - 8080

Fig.	Order Ref.	CD	8070	8080	Code	Description	N.B.
1	300506	1	12	12		Hex. cap screw	
2	322357	0	19	19		Tooth lockwasher	
3	100014	6	15	15		Hex. nut	
4	432814	3	1	1		Plate	
5	429789	3	1	1		Control levers	
6	322508	1	1	1		Knob	
7	130003	9	4	4		Cotter pin	
8	432817	9	1	1		Plate	
9	412152	5	1	1		Hex. lock nut	
10	434097	3	1	1		Plate	
11	120099	8	6	6		Hex. cap screw	
12	439304	9	1	1		Plate	
13	432796	3	1	1		Connecting rod	
14	130002	7	4	4		Cotter pin	
15	418882	8	1	1		Connecting rod	
16	140015	6	10	10		Plain washer	
17	418881	6	1	1		Shaft	
18	419885	5	1	1		Bracket	
19	130045	7	2	2		Pin	
20	362308	5	1	1		Lever	
21	130059	6	1	1		Roll pin	
22	130007	7	2	2		Cotter pin	
23	411558	4	1	1		Lever	
24	362869	3	1	1		Tension spring	
25	378243	5	1	1		Plain washer	
26	412250	3	1	1		Hex. lock nut	
27	411556	0	1	1		Adjusting rod	
28	386215	6	2	2		Connector	
29	335136	7	8	8		Ferrule	
30	335135	5	8	8		Coupler nut	
31	+		1	1		Hydraulic pipe	Ø 8 mm (5/16")
32	+		1	1		Hydraulic pipe	Ø 8 mm (5/16")
33	430357	1	12	12		Clamp	
34	386215	6	1	1		Connector	
35	398860	7	1	1		Variator cylinder	1.0 Incl.fig *
36	362626	9	1	1		Bushing	
37	335172	3	1	1		Connector	
38	410897	1	1	1		Orifice plate	
39	+		1	1		Hydraulic pipe	
40	+		1	1		Hydraulic pipe	
41	431941	1	1	1		Clamp bracket	
42	423996	6	1	1		Orifice	
43	120102	7	1	1		Hex. cap screw	
*	422380	0	1	1		Seal kit	

https://michelrogerbe 115

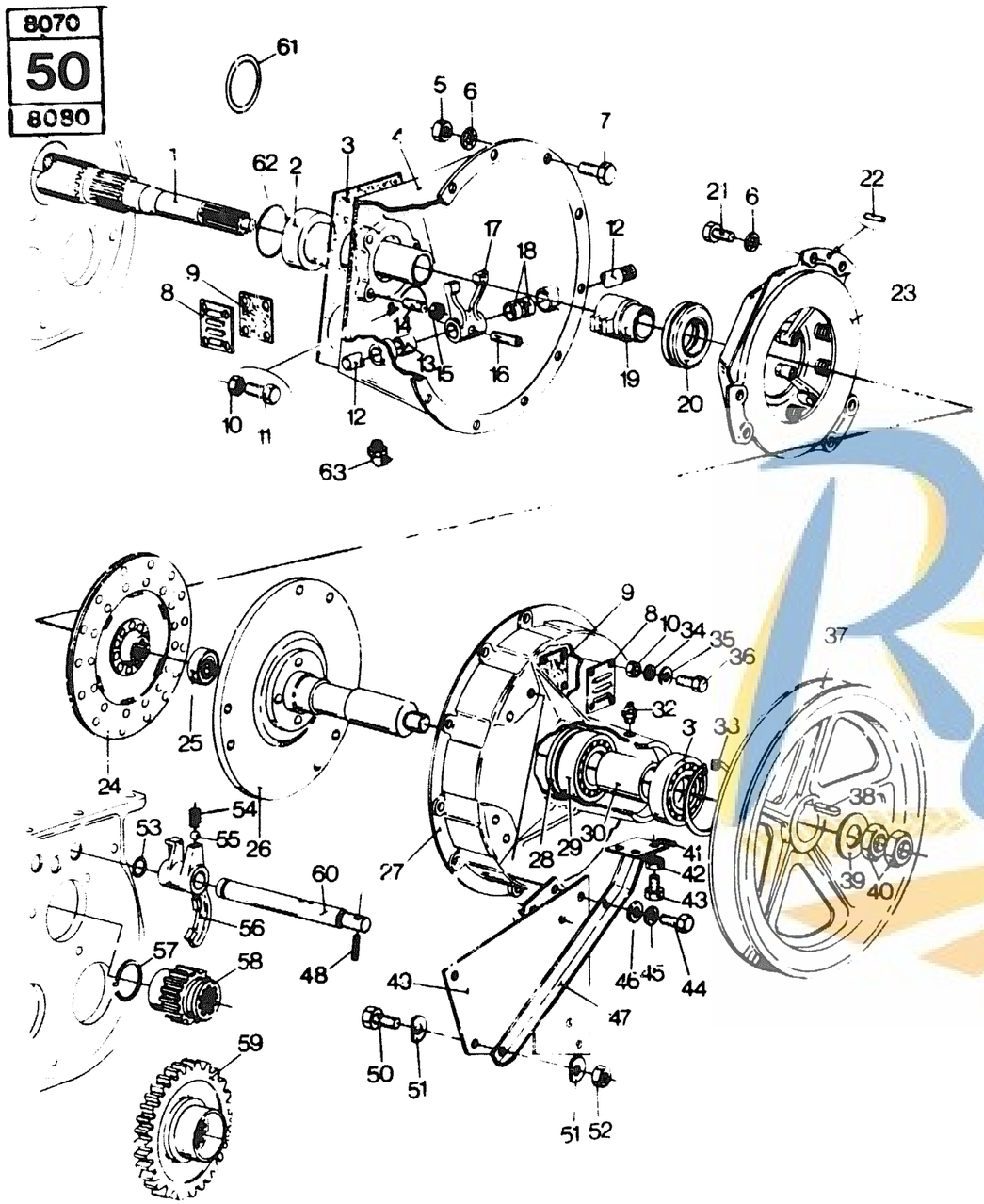

MECHANICAL DRIVE
TRANSMISSION MECANIQUE
MECHANISCHER FAHRANTRIEB
TRAZIONE MECCANICA
MECHANISCHE TRAKTIE

MODEL 8070 - 8080

Fig.	Order Ref.	CD	8070	8080	Code	Description		N.B
1	395966 8		1	1		Pilot shaft	7.4	
2	430437 1		1	1		Sleeve		
3	430801 4		1		844	Gasket	4.6	
	456162 8		1		58	Gasket	4.6	
	430801 4			1	491	Gasket	4.6	
	456162 8			1	47	Gasket	4.6	
4	442543 0			1	491	Clutch housing half		Incl. figs. 13 and 18
	456649 0			1	47	Clutch housing half		Incl. figs. 13 and 18
	432332 1		1		342	Clutch housing half		Incl. figs. 13 and 18
	442534 0		1		844	Clutch housing half		Incl. figs. 13 and 18
	456649 0		1		58	Clutch housing half		Incl. figs. 13 and 18
5	100015 8		10	10		Hex. nut		
6	322358 2		10	10		Tooth lockwasher		
7	300510 0		10	10		Hex. cap screw		
8	360047 9		1	1		Grill		
9	360046 7		1	1		Screen		
10	100014 6		5	5		Hex. nut		
11	300506 1		1	1		Hex. cap screw		
12	398649 9		1		342	Shaft		
	438781 8		1		39	Shaft		
	442360 2		1		964	Shaft		
	9508199 6		1		74	Shaft		
	450464 2			1	624	Shaft		
	9508200 1			1	59	Shaft		
13	420410 3		1	1		Bushing	3.7	
14	412193 1			3		Stud		
	110022 5		3			Stud		
15	100037 4		2	2		Hex. lock nut		
16	9506888 5		1	1		Roll pin		
17	398560 1		1	1		Fork		
18	420434 3		2	2		Bushing	3.7	
19	442368 8			1		Bearing hub		
	399060 2		1		342	Bearing hub		
	442368 8		1		39	Bearing hub		
20	441794 0			1	334	Thrust bearing	3.5	
	454372 1			1	44	Thrust bearing		
	399059 9		1		342	Thrust bearing		
	441794 0		1		717	Thrust bearing		
	454372 1		1		54	Thrust bearing		
21	120061 9		12	12		Hex. cap screw		
22	441792 6			2		Dowel pin		
	380092 8		2			Dowel pin		
23	442355 1			1	330	Pressure plate		
	450463 0			1	40	Pressure plate		
	410705 6		1			Pressure plate		

https://michelroger.be

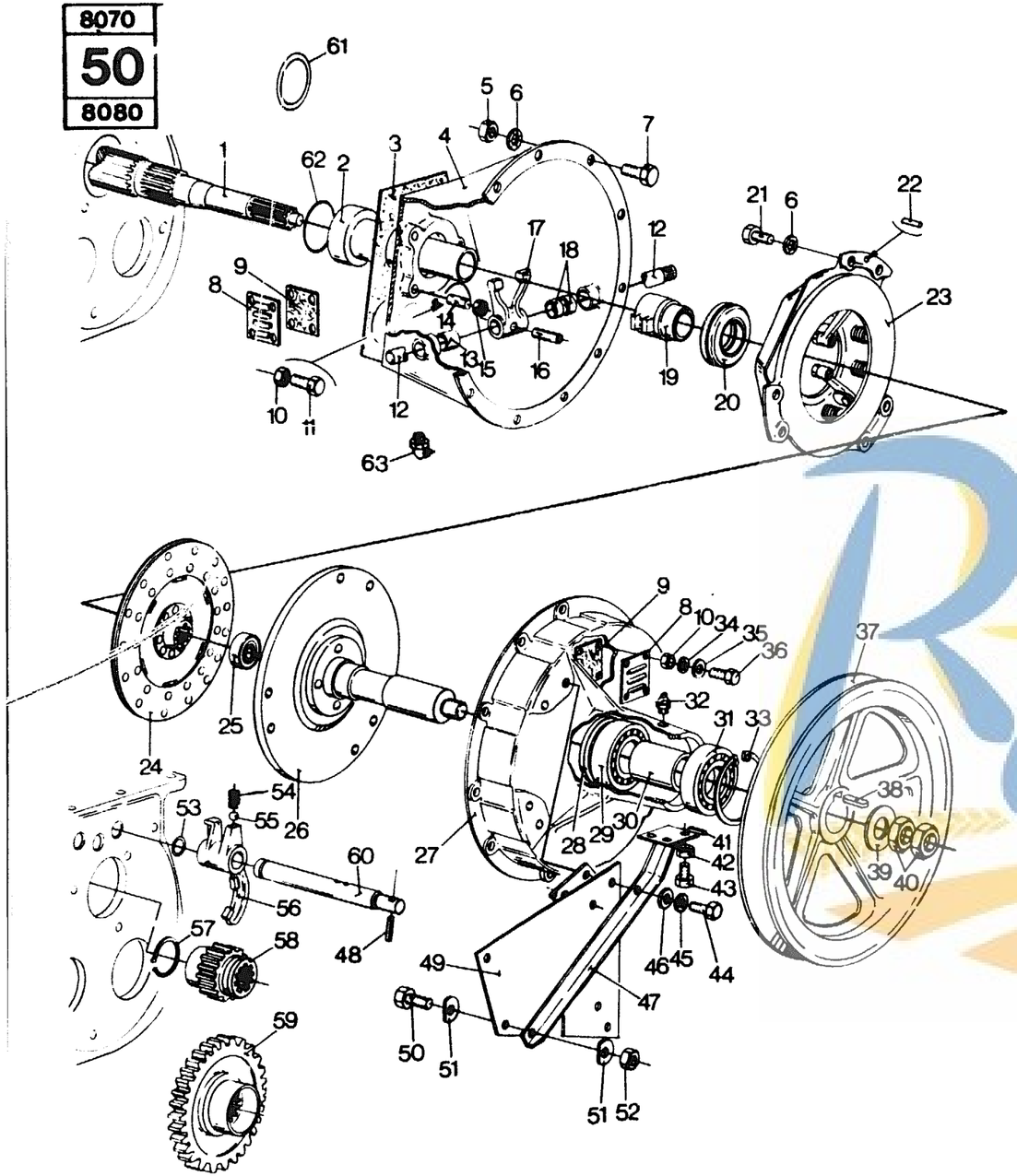

MECHANICAL DRIVE
TRANSMISSION MECANIQUE
MECHANISCHER FAHRANTRIEB
TRAZIONE MECCANICA
MECHANISCHE TRAKTIE

MODEL 8070 - 8080

Fig.	Order Ref.	CD	8070	8080	Code	Description	N.B
24	410704 4		1			Plate assy, Clutch	4.1
	442354 9			1		Plate assy, Clutch	
25	362804 7		1	1		Bearing	4.0
26	410703 2		1		342	Shaft w/flange	4.8
	442542 8		1		39	Shaft w/flange	
	442542 8			1		Shaft w/flange	
27	381336 7		1	1		Housing half, Clutch	5.3
28	375707 6		1	1		Grease seal	5.1
29	210045 4		1	1		Bearing	
30	382177 0		1	1		Bushing	
31	374792 4		1	1		Bearing	5.1
32	321204 6		1	1		Grease fitting	
33	370013 0		1	1		Circlip	5.1
34	322357 0		4	4		Tooth lockwasher	
35	140015 6		4	4		Plain washer	
36	120100 3		4	4		Hex. cap screw	
37	396923 9		1	1		Pulley	1.1
38	170019 0		1	1		Flat key	
39	140115 8		1	1		Plain washer	
40	100034 8		2	2		Hex. nut	
41	330263 1		1	1		Buffer piece	
42	100038 6		7	7		Hex. lock nut	
43	300389 1		3	3		Hex. cap screw	
44	120119 2		4	4		Hex. cap screw	
45	140046 1		4	4		Tooth lockwasher	
46	378245 9		2	2		Plain washer	
47	398658 8		1	1		Support	
48	300872 6		1	1		Roll pin	
49	422768 2		1	1		Plate	
50	120092 4		1	1		Hex. cap screw	
51	333041 4		2	2		Special washer	
52	100039 8		1	1		Hex. lock nut	
53	129979 3		1	1		"O" ring	
54	390835 6		1	1		Spring	2.9
55	210006 2		1	1		Steel ball	
56	421479 8		1	1		Selector fork	
57	412068 6		1	1		Circlip	
58	395964 4		1	1		Gear	7.4
59	395965 6		1	1		Gear	
60	430773 3		1	1		Shaft	2.9 For reverse gear
61	433629 1		1	1		"O" ring	
62	388116 8		1	1		"O" ring	
63	323713 7		2	2		Grease fitting	

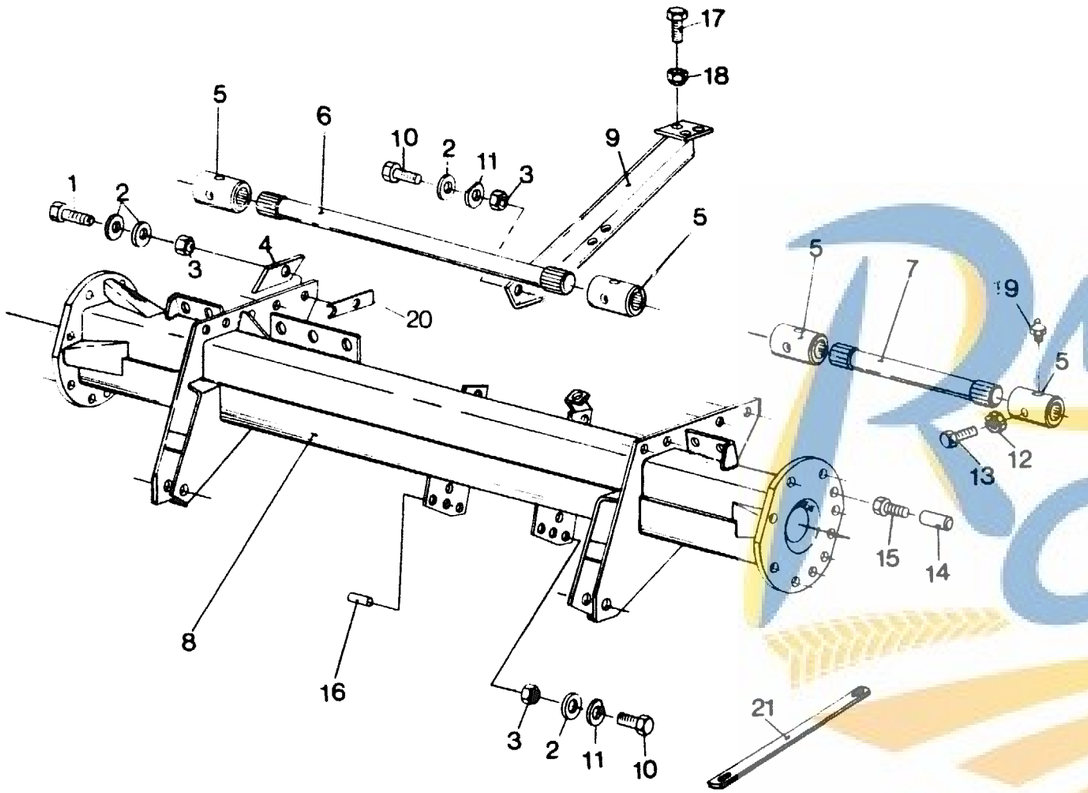

FRONT AXLE
ESSIEU AVANT
VORDERACHSE
PUNTELLO DI SUPPORTO
DRAAGBALK

MODEL 8070 - 8080

Fig.	Order Ref.	CD	8070	8080	Code	Description		N.B.
1	120090	0	10	10		Hex. cap screw		
2	333040	2	26	26		Plain washer		
3	100020	9	16	16		Hex. nut		
4	389864	4	4	4		Plate		
5	381823	0	4	4		Splined connector	0.8	
6	388017	8		1		Drive shaft	0.8	Right-hand (1030 mm) 3 ft. -4,500"
	411378	9	1			Drive shaft		
	392901	2		1		Drive shaft		Right-hand (828 mm) 2 ft. -8,661"
7	388018	0	1	1		Drive shaft	0.8	Left-hand (536 mm) 1 ft. - 9,000"
	392900	7		1		Drive shaft		Left-hand (364 mm) 1 ft. - 2,362"
8	387960	6		1		Axle beam	8.9	(2.460 mm) 8 ft. - 1,102"
	392529	9		1		Axle beam		(2.104 mm) 6 ft. - 7,087"
	394289	1	1			Axle beam		
9	399871	1	1	1		Support		
10	120091	2	7	7		Hex. cap screw		
11	333041	4	6	6		Special washer		
12	100037	4	4	4		Hex. lock nut		
13	120073	4	4	4		Hex. cap screw		
14	382610	0	4	4		Dowel pin		
15	120119	2	4	4		Hex. cap screw		
16	382611	2	2	2		Pin		
17	300389	1	3	3		Hex. cap screw		
18	100038	6	3	3		Hex. lock nut		
19	321204	6	4	4		Grease fitting		
20	422114	7	AR	AR		Shim plate		
21	394463	1	1			Brace		

https://michelroger.be 118

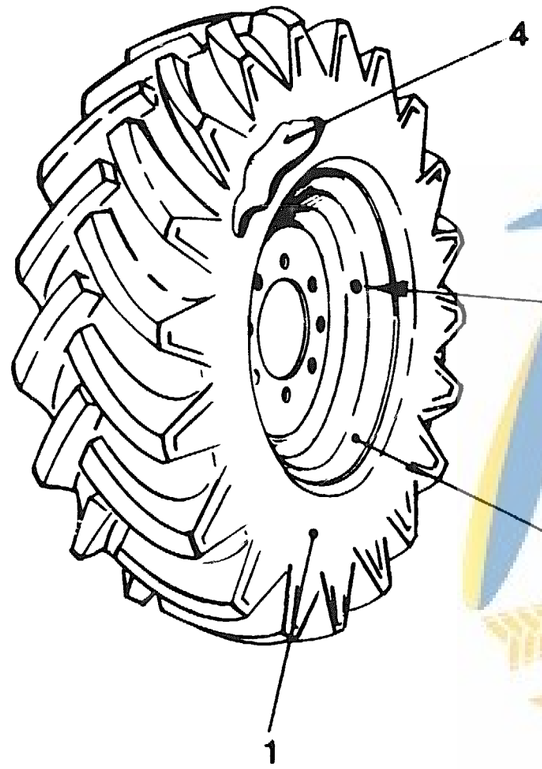

TRACTION WHEELS
ROUES DE TRACTION
ANTRIEBSRÄDER
RUOTE MOTRICI
AANDRIJFWIELEN

ONLY VALID UNTIL SERIAL No : 4245999 (8070)
4132999 (8080)

MODEL 8070 - 8080

Fig.	Order Ref.	CD	8070	8080	Code	Description	N.B
						23.1 - 26 - 12 PR - R - 1	12 ply
1	398417 8		2	2		Tyre	
2	455929 3		2	2		Wheel rim	DW 20 x 26
3	397236 3		2	2		Valve	For tubeless tyre
4	455144 9		2	2		Inner tube	
						23.1 - 26L 12PR - R - 1	
1	398417 8		2			Tyre	
2	455927 9		2			Wheel rim	DW 16 x 26
3	397236 3		2			Valve	For tubeless tyre
4	455144 9		2			Inner tube	
						23.1 - 30L 10 PR - R -1	10 ply
1	396200 7		2	2		Tyre	
2	455931 8		2	2		Wheel rim	DW 20 x 30
3	395448 0		2	2		Valve	For tubeless tyre
4	455140 1		2	2		Inner tube	
						18.4 - 30L 14 PR - R -1	14 Ply
1	396199 2			2		Tyre	
2	455930 6			2		Wheel rim	DW 16 x 30
3	395448 0			2		Valve	For tubeless tyre
4	190007 9			2		Inner tube	
						23.1 - 30L 10 PR - R - 2 - 0	10 ply
1	410469 4		2	2		Tyre	
2	455931 8		2	2		Wheel rim	DW 20 x 30
3	395448 0		2	2		Valve	For tubeless tyre
4	455140 1		2	2		Inner tube	
						21L - 30 - 12 PR - R - 1	12 ply
1	430897 5		2			Tyre	
2	455931 8		2			Wheel rim	DW 20 x 30
3	395448 0		2			Valve	For tubeless tyre
4	455141 3		2			Inner tube	
						30.5 - 32 - 10 PR - R - 1	10 ply
1	453177 6		2	2		Tyre	
2	455934 4		2	2		Wheel rim	DW 27 x 32
3	395448 0		2	2		Valve	For tubeless tyre
4	451619 2		2	2		Inner tube	
						30.5L - 32 - 10 PR - R - 2 - 0	10 ply
1	425254 6		2	2		Tyre	
2	455934 4		2	2		Wheel rim	DW 27 x 32
3	395448 0		2	2		Valve	For tubeless tyre
4	451619 2		2	2		Inner tube	

Michel Roger

https://michelroger.be 119

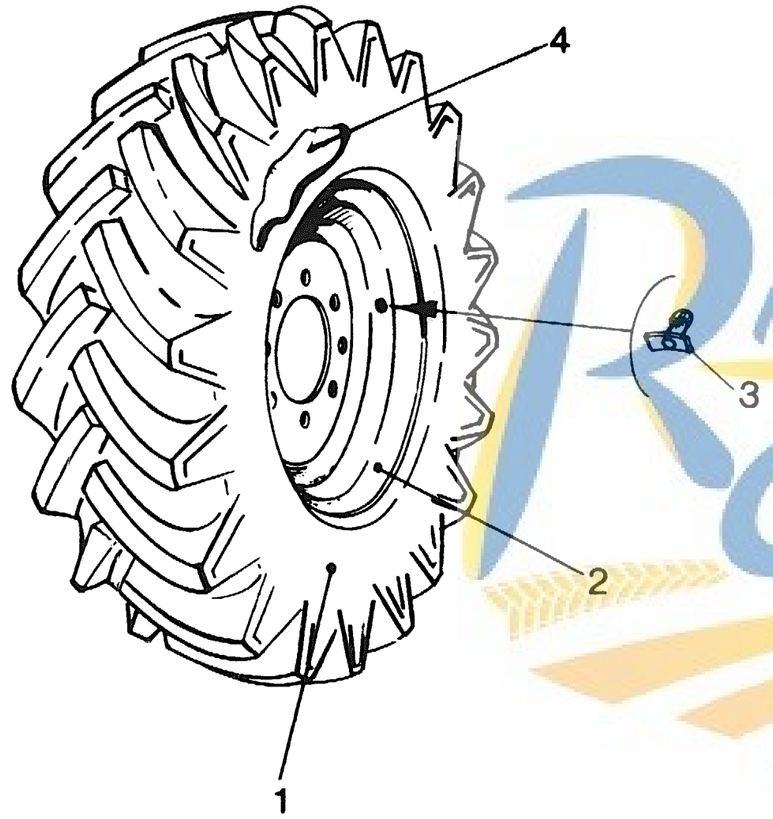

TRACTION WHEELS
ROUES DE TRACTION
ANTRIEBSRÄDER
RUOTE MOTRICI
AANDRIJFWIELEN

ONLY VALID FROM SERIAL No : 4246001 (8070)
4133001 (8080)

MODEL 8070 - 8080

Fig.	Order Ref.	CD	8070	8080	Code	Description	N.B
						23.1 - 26 - 12 PR - R - 1	12 ply
1	**913575 7**		2	2		Tyre	
2	748947 5		2	2		Wheel rim	DW 20 x 26
3	743867 0		2	2		Valve	
	9507108 4		2	2		Valve	
4	455144 9		2	2		Inner tube	
						23.1 - 26 12PR - R - 1	
1	**913575 7**		2	2		Tyre	
2	**748946 3**		2	2		Wheel rim	DW 16 x 26
3	**9507108 4**		2	2		Valve	
4	455144 9		2	2		Inner tube	
						23.1 - 30 10 PR - R -1	10 ply
1	**9508086 7**		2	2		Tyre	
2	748949 9		2	2		Wheel rim	DW 20 x 30
3	**9507108 4**		2	2		Valve	
4	750358 0		2	2		Inner tube	
						18.4 - 30 14 PR - R -1	14 Ply
1	748939 8			2		Tyre	
2	748948 7			2		Wheel rim	DW 16 x 30
3	**9507108 4**			2		Valve	
4	750356 6			2		Inner tube	
						23.1 - 30L 10 PR - R - 2 - 0	10 ply
1	748941 3		2	2		Tyre	
2	748949 9		2	2		Wheel rim	DW 20 x 30
3	**9507108 4**		2	2		Valve	
4	750358 0		2	2		Inner tube	
						21L - 30 - 12 PR - R - 1	12 ply
1	748943 7		2			Tyre	
2	748949 9		2			Wheel rim	DW 20 x 30
3	**9507108 4**		2			Valve	
4	750357 8		2			Inner tube	
						30.5 - 32 - 10 PR - R - 1	10 ply
1	748940 1		2	2		Tyre	
2	748952 6		2	2		Wheel rim	DW 27 x 32
3	**9507108 4**		2	2		Valve	
4	**9509741 8**		2	2		Inner tube	
						30,5L - 32 - 10 PR - R - 2 - 0	10 ply
1	748942 5		2	2		Tyre	
2	748952 6		2	2		Wheel rim	DW 27 x 32
3	**9507108 4**		2	2		Valve	
4	**9509741 8**		2	2		Inner tube	

https://michelroger.be 120

TRACTION WHEELS
ROUES DE TRACTION
ANTRIEBSRÄDER
RUOTE MOTRICI
AANDRIJFWIELEN

ONLY VALID FROM SERIAL No : 4246001 (8070)
4133001 (8080)

MODEL 8070 - 8080

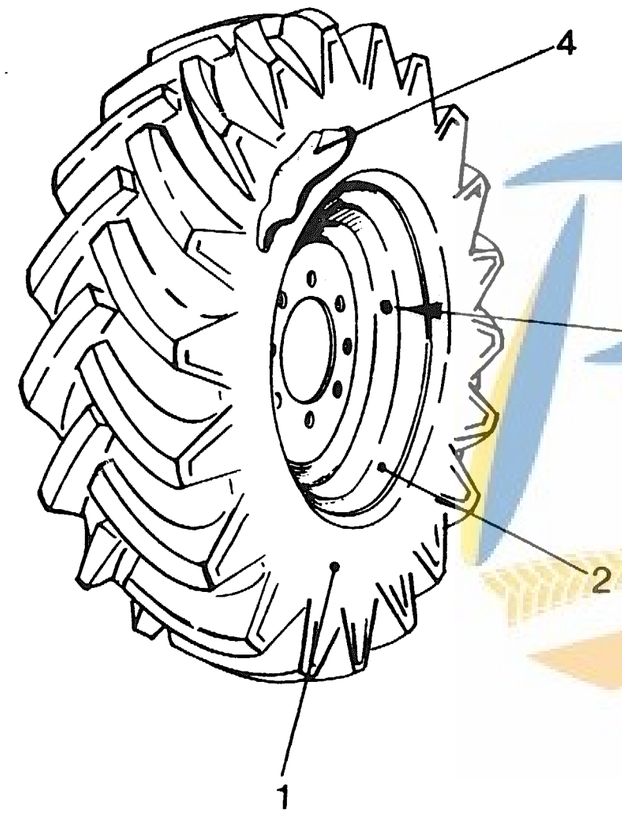

Fig.	Order Ref.	CD	8070	8080	Code	Description	N.B
						18.4 - 30 - 12 PR - R - 1	
1	9508084	3	2			Tyre	
2	748948	7	2			Wheel rim	DW 16 x 30
3	9507108	4	2			Valve	
4	750356	6	2			Inner tube	
						30,5L - 32 - 12PR - R - 1 WIRE AMOURED	
1	743871	9		2		Tyre	
2	748952	6		2		Wheel rim	DW 27A x 32
3	9507108	4		2		Valve	
4	750360	5		2		Inner tube	
						24.5 - 32 - 12 PR - R - 1	
1	916532	0		2		Tyre	
2	748401	9		2		Wheel rim	
3	9507108	4		2		Valve	
4	916533	2		2		Inner tube	
						30.5 - LR 32 - 12 PR - R1 - 16?	
1	920416	0		2		Tyre	
2	748952	6		2		Wheel rim	
3	9507108	4		2		Valve	
4	9509741	8		2		Inner tube	
						30.5L - 32 - 10 PR - R - 1 -	**DYNA TORQUE - TL (TUBELESS)**
1	**453177**	**6**	2			Tyre	
2	**748952**	**6**	2			Wheel rim	DW 27 x 32
3	**397236**	**3**	2			Valve	

https://michelroger.be

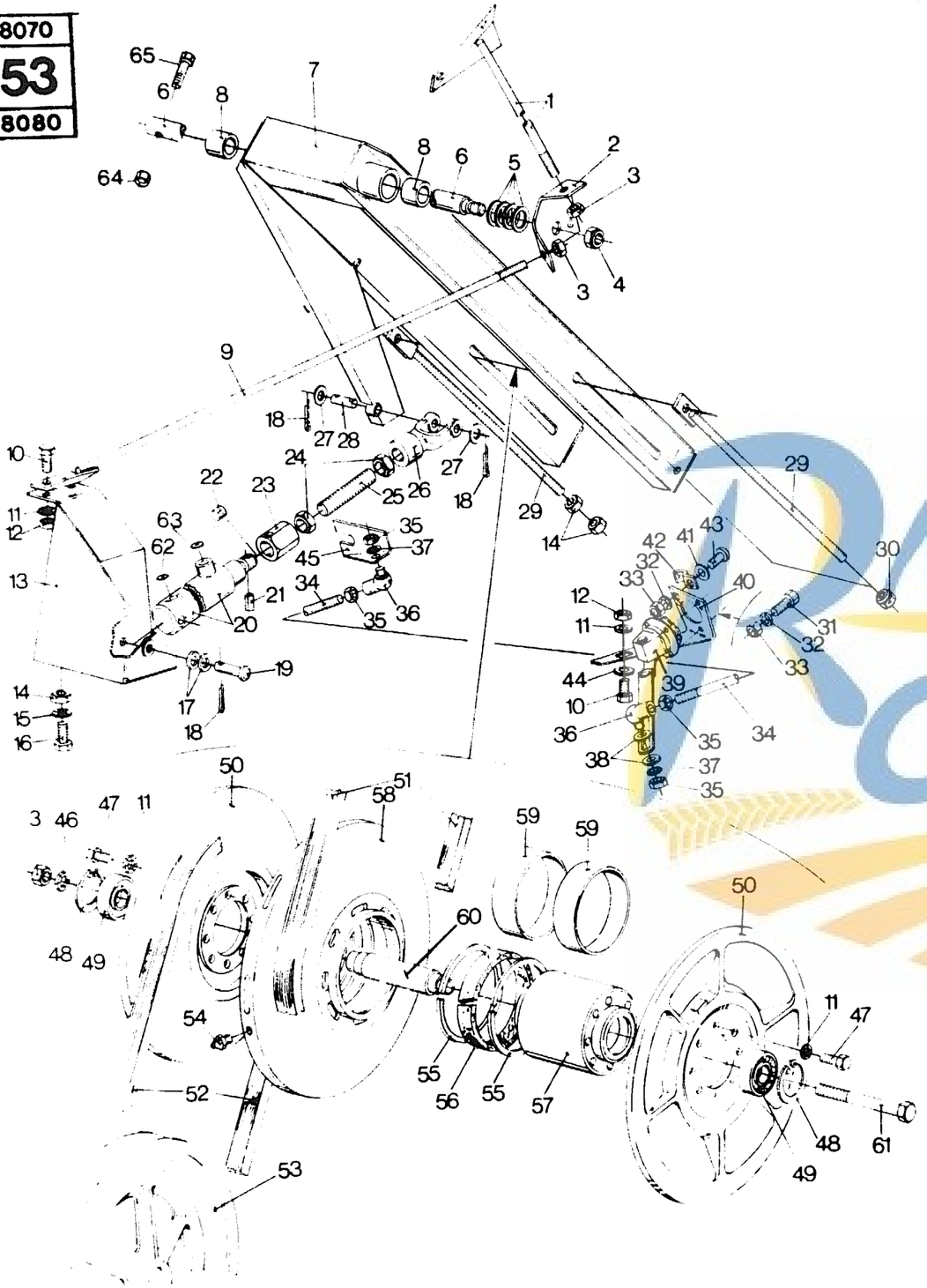

GROUND SPEED VARI-DRIVE
VARIATEUR DE VITESSE
GETRIEBEVARIATOR
VARIATORE VELOCITA AVANZAMENTO
RIJVARIATOR

MODEL 8070 - 8080

Fig.	Order Ref.	CD	8070	8080	Code	Description		N.B.
1	417100	1	1	1		Adjusting rod		
2	397740	2	1	1		Bracket		
3	100020	9	5	5		Hex. nut		
4	380424	3	1	1		Hex. lock nut		
5	397638	5	4	4		Shim washer		
6	397597	7	1		338	Shaft		
	422438	3	1		35	Shaft		
	422438	3		1		Shaft		
7	397611	9	1	1		Variator support	2.3	Incl.fig.8
8	397608	2	2	2		Bushing		
9	397743	8	1	1		Adjusting rod		
10	120111	6	2	2		Hex. cap screw		
11	140045	9	2	2		Tooth lockwasher		
12	100016	0	2	2		Hex. nut		
13	397605	6	1	1		Support		
14	337475	7	4	4		Hex. nut		
15	140046	1	2	2		Tooth lockwasher		
16	300388	9	2	2		Hex. cap screw		
17	140175	4	2	2		Plain washer		
18	130008	9	3	3		Cotter pin		
19	422103	4	1	1		Clevis pin		
20	398860	7	1	1		Variator cylinder	1.0	For breakdown see hydraulic group 49
21	130059	6	1	1		Roll pin	0.5	
22	362626	9	1	1		Nylon insert	0.9	
23	420856	7	1	1		Adjusting block		
24	100033	6	2	2		Hex. nut		
25	410826	2	1	1		Threaded rod		
26	321526	8	1	1		Yoke	0.7	
27	378245	9	2	2		Plain washer		
28	332881	3	1	1		Pivot pin	0.5	
29	418503	6	2	2		Adjusting rod		
30	100038	6	1	1		Hex. lock nut		
31	120202	9	3	3		Machine screw		
32	322355	6	18	18		Tooth lockwasher		
33	100012	2	18	18		Hex. nut		
34	410921	4	1	1		Adjusting rod		
35	100014	6	4	4		Hex. nut		
36	350186	1	2	2		Ball hinge		Incl.fig.35
37	322357	0	2	2		Tooth lockwasher		
38	140040	9	2	2		Plain washer		
39	355528	2	1	1		Variator sender	0.8	

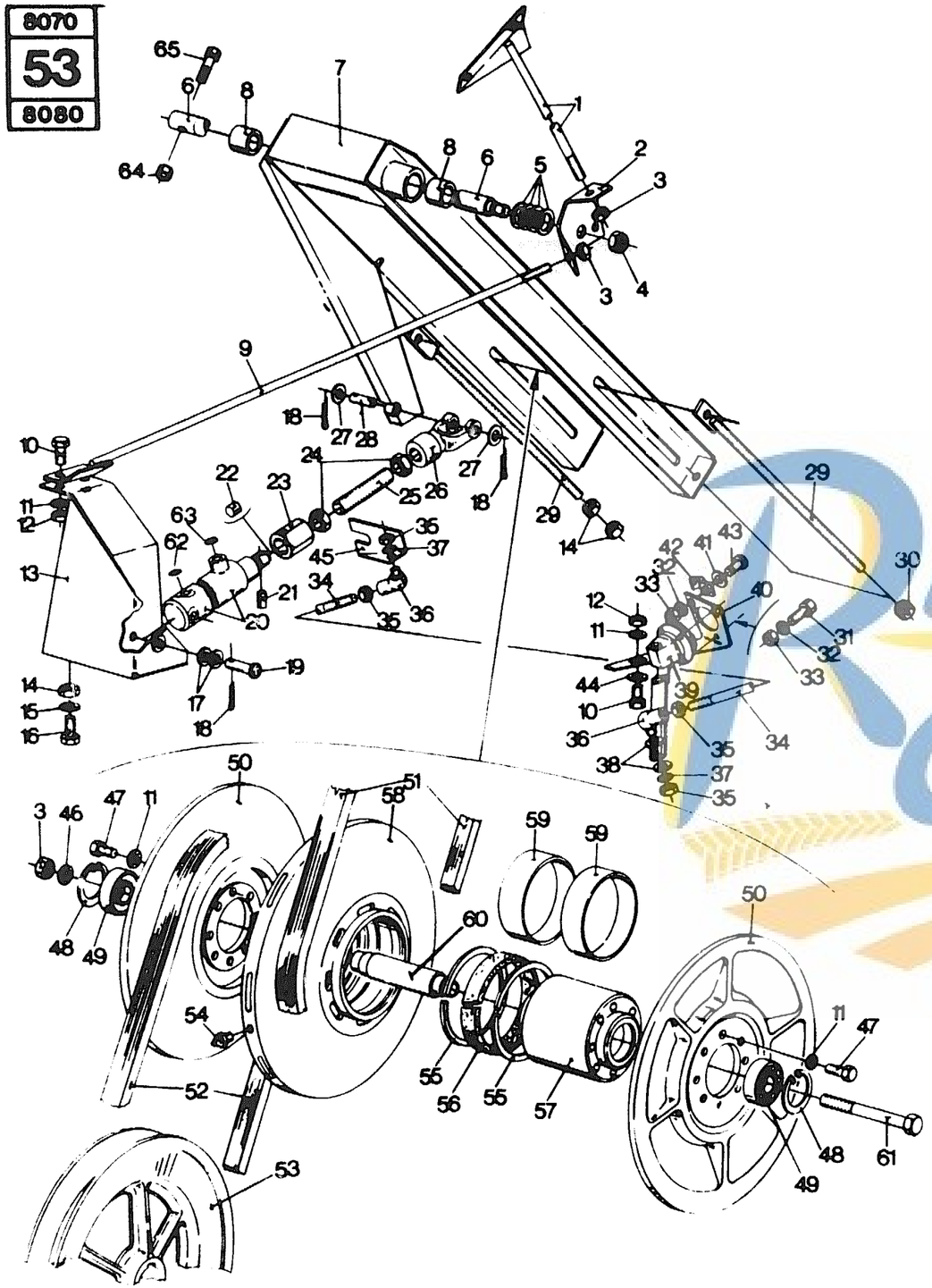

GROUND SPEED VARI-DRIVE
VARIATEUR DE VITESSE
GETRIEBE VARIATOR
VARIATORE VELOCITA AVANZAMENTO
RIJVARIATOR

MODEL 8070 - 8080

Fig.	Order Ref.	CD	8070	8080	Code	Description		N.B.
42	353072 3		1	1		Clamp		
43	120007 5		2	2		Machine screw		
44	378244 7		2	2		Plain washer		
45	362237 4		1	1		Bracket		
46	140048 5		1	1		Tooth lockwasher		
47	120112 8		16	16		Hex. cap screw		
48	370012 8		2	2		Circlip	1.3	
49	210043 0		2	2		Bearing	1.7	
50	419968 1		2	2		Variator disc, Outer	1.7	
51	444935 3			1	329	"V" belt	1.5	Normal Speed - Pulley Ø 404 mm
	321559 3			1	39	"V" belt		Normal Speed - Pulley Ø 404 mm
	321559 7		1			"V" belt		Normal speed - Pulley Ø 404 mm
	444934 1			1	329	"V" belt		Low Speed - Pulley Ø 350 mm
	417643 1			1	39	"V" belt		Low Speed - Pulley Ø 350 mm
	417643 1		1			"V" belt		Low Speed - Pulley Ø 350 mm
52	444936 5			1	329	"V" belt	1.5	
	356025 7			1	39	"V" belt		Low Speed - Pulley Ø 350 mm
	356025 7		1			"V" belt		
53	396923 9		1	1		Pulley	1.1	
54	332038 6		1	1		Grease fitting		
55	220039 3		2	2		Segment	1.9	
56	365830 5		1	1		Felt packing	1.6	
57	419966 7		1	1		Hub	2.1	
58	370949 3		1	1		Variator disc, Centre	1.7	
59	370950 6		2	2		Sleeve bearing	2.0	
60	429330 2			1		Shaft	1.7	
	260029 0		1			Shaft		
61	120094 8		1	1		Hex. cap screw		
62	410897 1		1	1		Orifice		
63	423996 6		1	1		Orifice		
64	100067 7		1	1		Hex. nut		
65	412619 5		1	1		Hex. cap screw		

https://michelroger.be 123

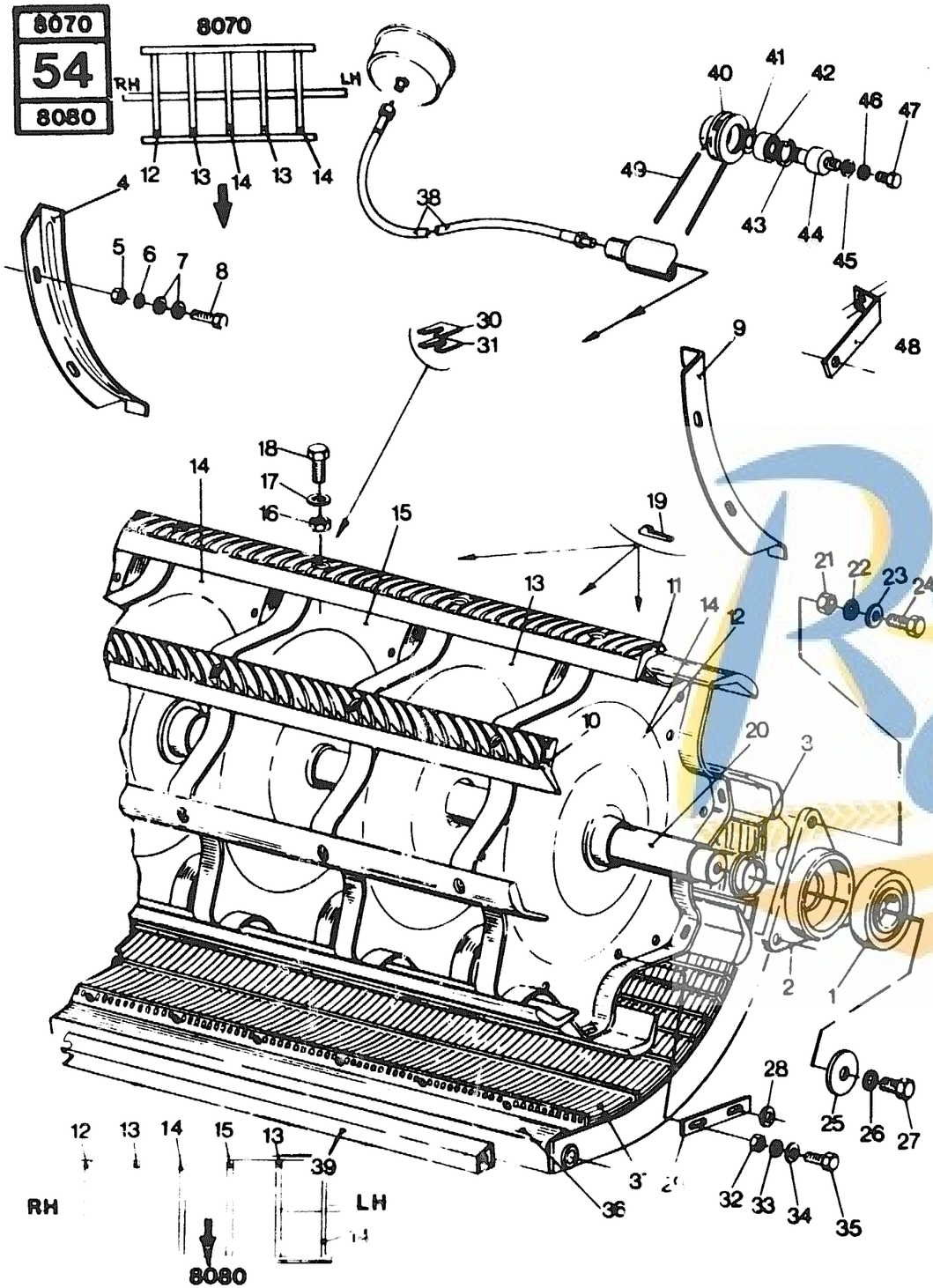

DRUM & CONCAVE
BATTEUR & CONTRE BATTEUR
DRESCHTROMMEL & DRESCHKORB
BATTITORE E CONTROBATTITORE
DORSTROMMEL & DORSMANTEL

Fig.	Order Ref.	CD	8070	8080	Code	Description		N.B.
1	388069	7	2	2		Ball bearing LH & RH	1.5 (LH) 2.5 (RH)	
2	395501	4	2	2		Bearing housing LH & RH		
3	388669	9	2	2		Spacer ring LH & RH		
4	333222	8	1	1		Angle, Anti-wrap, RH		
5	100014	6	28	28		Hex. nut		
6	322357	0	28	28		Tooth lockwasher		
7	140015	6	10	10		Plain washer		
8	120110	4	25	25		Hex. cap screw		
9	335307	0	1	1		Angle, Anti-wrap, LH		
10	398439	4		2		Rasp bar set, RH		Grooved
	411996	2	2			Rasp bar set, RH	2.7(8070)	Grooved
11	398438	2		2		Rasp bar set, LH	3.6(8080)	Grooved
	411995	0	2			Rasp bar set, LH		Grooved
12	388503	9	1	1		Drum disc, RH		
13	394487	1	2	2		Drum disc, RH & centre LH	16.4(8070)	
14	388504	1	2	2		Drum disc, LH & centre	17.3(8080)	
15	375421	0		1		Drum disc, centre		
16	337475	7	40	48		Hex. nut		
17	394630	6	40	48		Plain washer		
18	385376	5	40	48		Hex. cap screw		
19	426210	5	3	3		Key, Gib head		
20	426221	8		1		Drum shaft	8.9	
	426222	0	1			Drum shaft		
21	100016	0	6	6		Hex. nut		
22	140045	9	6	6		Tooth lockwasher		
23	378244	7	6	6		Plain washer		
24	120111	6	6	6		Hex. cap screw		
25	128784	9	1	1		Washer		
26	140086	5	1	1		Tooth lockwasher		
27	300388	9	1	1		Hex. cap screw		
28	378245	9	AR	AR		Plain washer		
	140082	7	AR	AR		Plain washer		
	140075	2	AR	AR		Plain washer		
	140086	5	AR	AR		Plain washer		
29	481494	2	AR	AR		Plate		
30	481491	6	AR	AR		Shim		1 mm
31	362841	5	AR	AR		Shim		0,5 mm
32	100015	8	AR	AR		Hex. nut		
33	322358	2	AR	AR		Tooth lockwasher		
34	378243	5	AR	AR		Plain washer		
35	120105	3	AR	AR		Hex. cap screw		

https://michelroger.be 124

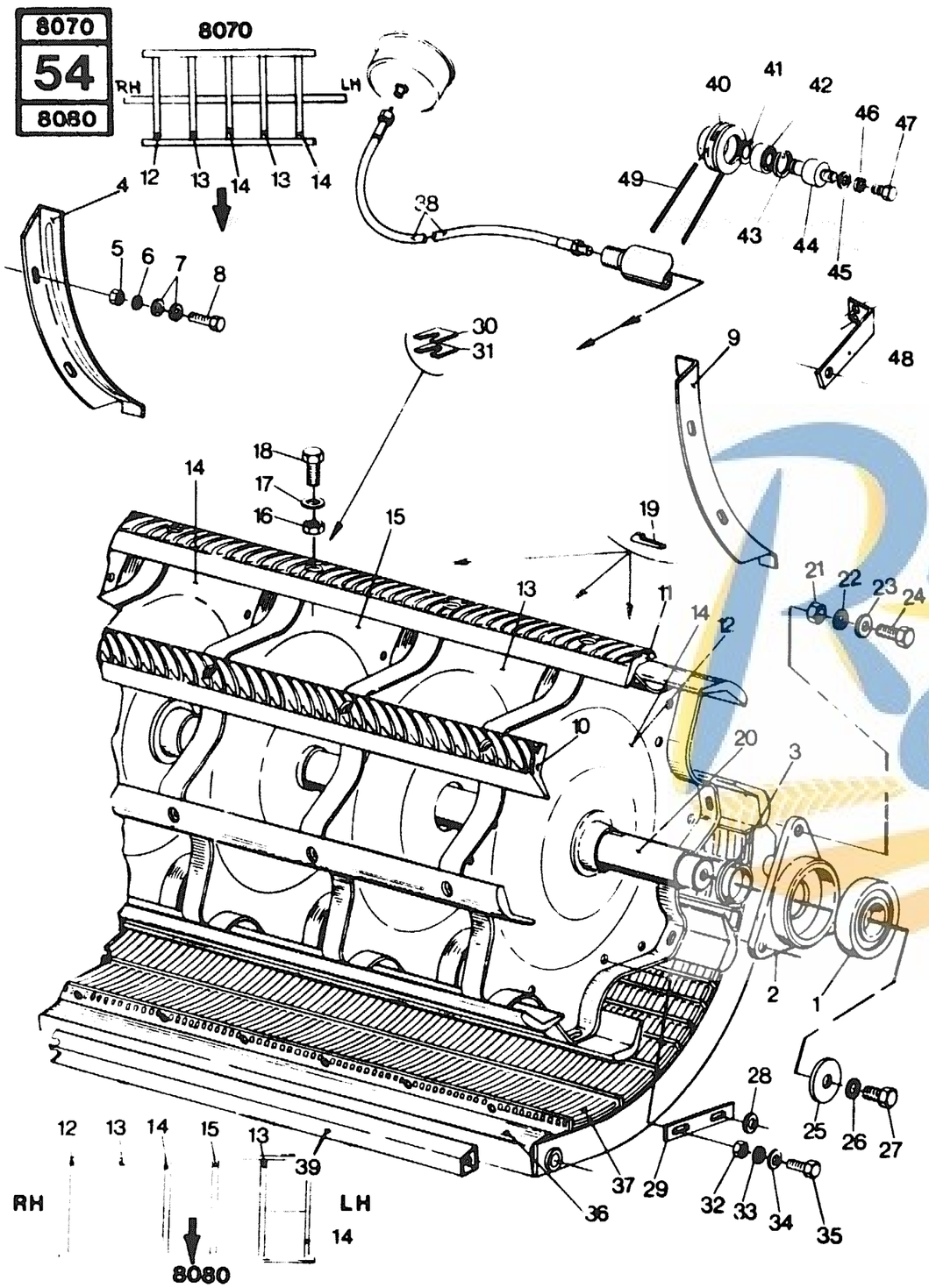

DRUM & CONCAVE
BATTEUR & CONTRE BATTEUR
DRESCHTROMMEL & DRESCHKORB
BATTITORE E CONTROBATTITORE
DORSTROMMEL & DORSMANTEL

MODEL 8070 - 8080

Fig.	Order Ref.	CD	8070	8080	Code	Description		N.B.
36	394626	7		1		Concave		Cold countries - Incl. fig. 37
	391234	3	1		847	Concave		Cold countries - Incl. fig. 37
	450573	3	1		61	Concave		Cold countries - Incl. fig. 37
	395517	7		1		Concave	7.1	Warm countries - Incl. fig. 37
	391326	8	1		847	Concave		Warm countries - Incl. fig. 37
	450628	0	1		61	Concave		Warm countries - Incl. fig. 37
	433519	8		1		Concave		Universal - Incl. fig. 37
	433520	1	1			Concave		Universal - Incl. fig. 37
37	323913	1	78	94		Concave wire		Cold countries
	323913	5	112	134		Concave wire		Warm countries
	399373	9	77	95		Concave wire		Universal
38	393699	0	1		745	Tachometer cable	0.5	
	456560	2	1		851	Tachometer cable		
	393699	0	1		64	Tachometer cable		
	393699	0		1	333	Tachometer cable		
	456560	2		1	611	Tachometer cable		
	393699	0		1	51	Tachometer cable		
39	411014	3	1			Cross member		
	411013	2	1	1		Cross member		
40	437604	3	1	1		Pulley		With 30.5 L x 32 - 10 ply traction tyre Sure Grip and rice tyre only
41	301615	9	1	1		Circlip		
42	308803	9	1	1		Ball bearing		
43	300642	9	1	1		Circlip		
44	437605	5	1	1		Shaft		
45	378243	5	1	1		Plain washer		
46	322358	2	1	1		Tooth lockwasher		
47	100015	8	1	1		Hex. nut		
48	437974	6	1	1		Bracket		
49	437607	9	1	1		Belt		

https://michelroger.be 125

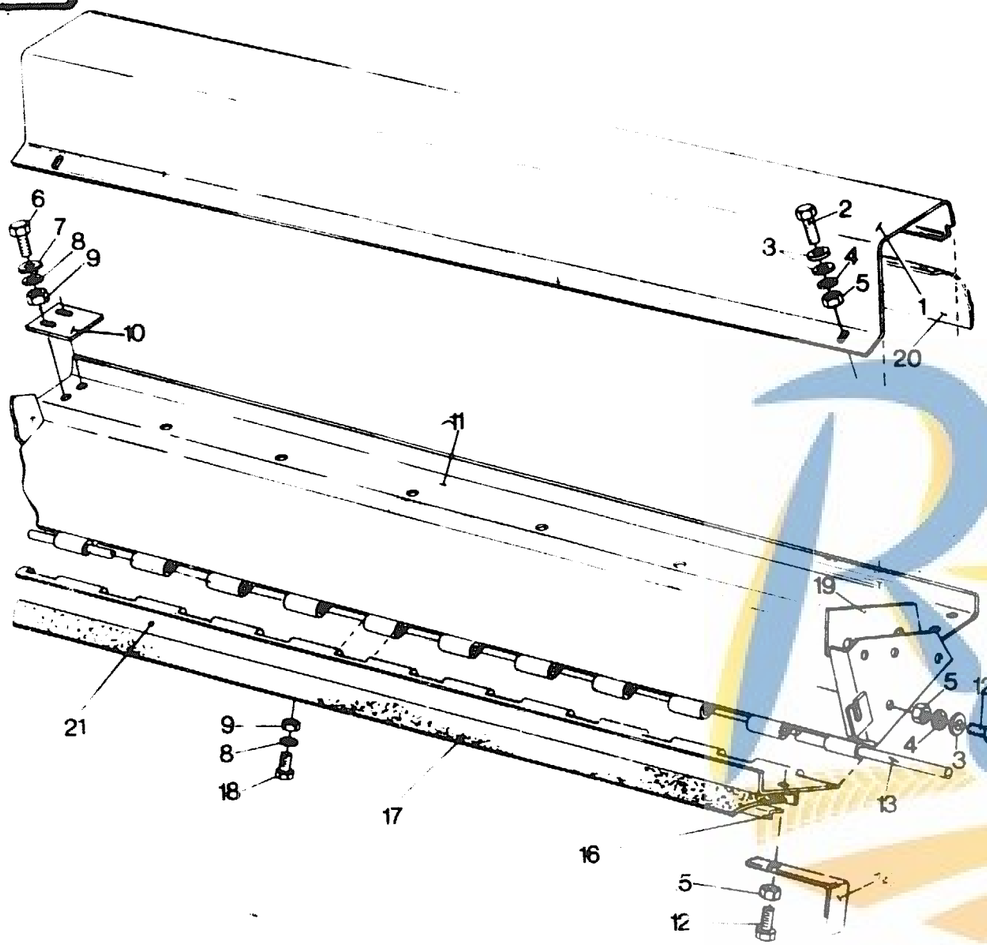

STONE TRAP
BAC A PIERRES
STEINFANGMULDE
PARASASSI
STEENVANGGOOT

MODEL 8070 - 8080

Fig.	Order Ref.	CD	8070	8080	Code	Description	N.B.
1	395318	5		1		Cover plate	
	395319	7	1			Cover plate	
2	120104	1	2	2		Hex. cap screw	
3	378243	5	AR	AR		Plain washer	
4	322358	2	AR	AR		Tooth lockwasher	
5	100015	8	AR	AR		Hex. nut	
6	120099	8	4	4		Hex. cap screw	
7	140040	9	4	4		Plain washer	
8	322357	0	4	4		Tooth lockwasher	
9	100014	6	4	4		Hex. nut	
10	394213	2	2	2		Seal	
11	433378	8		1		Stone trap	2.7
	433377	6	1		492	Stone trap	
	450583	4	1		47	Stone trap	
12	120161	1		8		Hex. cap screw	
13	391921	0		1		Rod	
	394330	0	1			Rod	
14	394217	0		2		Locking handle	
15	100067	7		2		Hex. lock nut	
16	390374	8		2		Retaining strip	
	399397	5	2			Retaining strip	
17	390375	0		1		Sealing flap	
	394604	1	1			Sealing flap	
18	120100	3		AR		Hex. cap screw	
19	427975	6		2		Plate	
	426734	5	2			Plate	
20	423892	6		1		Canvas	
	423891	4	1			Canvas	
21	394220	7		1		Cover	
	394336	2	1			Cover	

Michel ROGER

Michel ROGER GROUP

56 ➧ 60

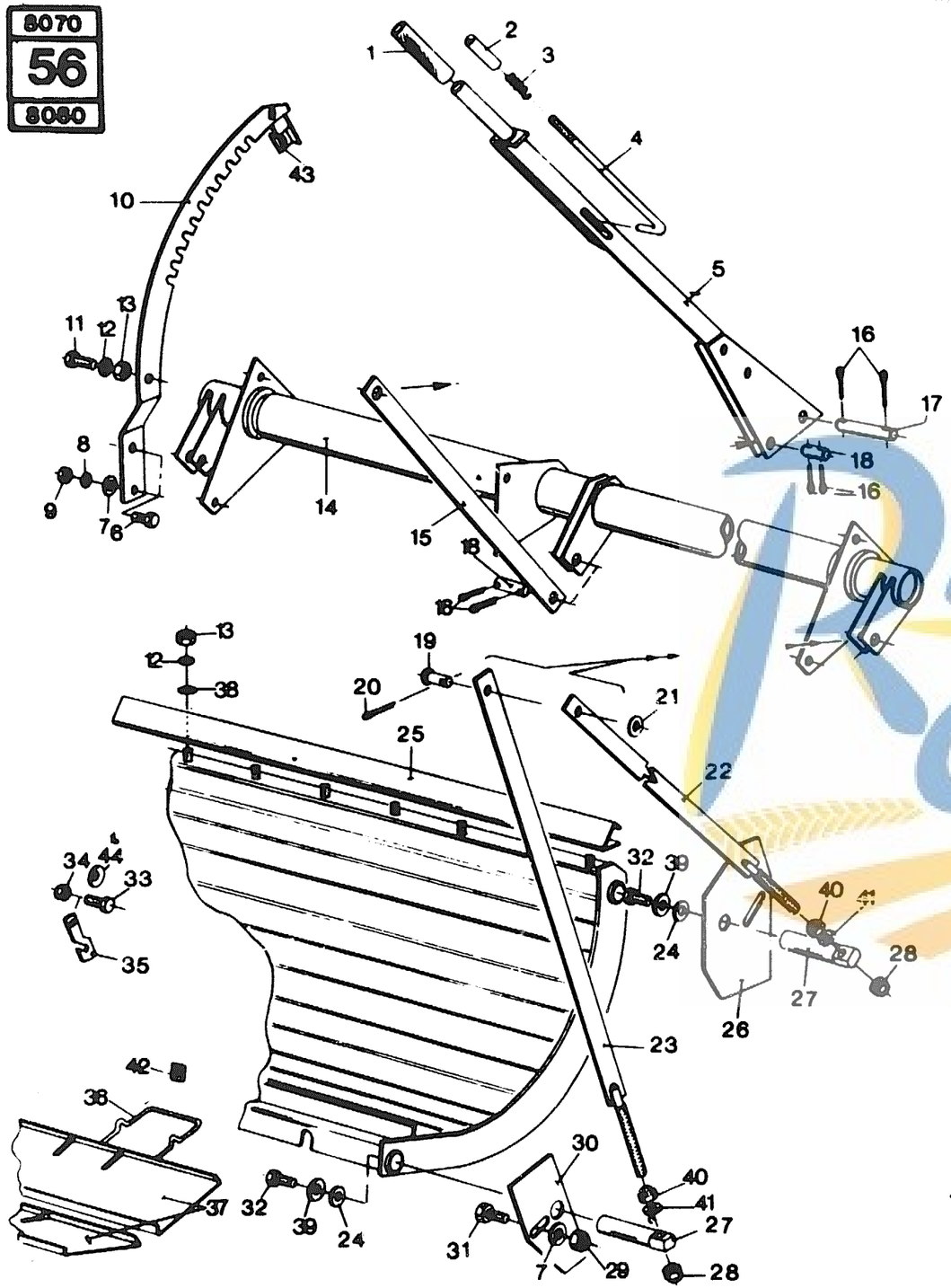

CONCAVE ADJUSTMENT LEVER
COMMANDE CONTRE-BATTEUR
DRESCHKORB STEUERHEBEL
COMANDO DEL CONTROBATTITORE
DORSKORFBEDIENING

MODEL 8070 - 8080

Fig.	Order Ref.	CD	8070	8080	Code	Description	N.B
1	332749	3	1	1		Handgrip	0.5
2	335875	3	1	1		Push button	
3	321215	9	1	1		Compression spring	
4	389510	5	1	1		Pawl rod	
5	425306	7	1	1		Adjusting lever	
6	120161	1	3	3		Hex. cap screw	
7	378243	5	16	16		Plain washer	
8	322358	2	15	15		Tooth lockwasher	
9	100015	8	11	11		Hex. nut	
10	436086	2	1	1		Toothed quadrant	
11	120110	4	1	1		Hex. cap screw	
12	140045	9	1	1		Tooth lockwasher	
13	100016	0	1	1		Hex. nut	
14	389527	0		1		Lever w/a	
	393311	9		1		Lever w/a	
15	389519	3	1	1		Connecting link	
16	**412686**	**6**	6	6		Cotter pin	
17	364433	2	1	1		Pivot pin	
18	389503	0	2	2		Pivot pin	
19	390089	3	2	2		Clevis pin	
20	130007	7	2	2		Cotter pin	
21	378246	1	2	2		Plain washer	
22	389518	1	2	2		Suspension arm	] 1.6
23	389516	7	2	2		Suspension arm	
24	394631	8	4	4		Plain washer	
25	391586	8	1		847	Cross member	
	748245	7	1		61	Cross member	
	389108	2		1		Cross member	
26	389506	6	2	2		Plate	
27	426630	5	4	4		Shaft	3.0
28	412066	2	4	4		Hex. lock nut	
29	100067	7	4	4		Hex. lock nut	
30	389507	8	2		611	Plate	
	389507	8		2	851	Plate	
	918812	6	2		56	Plate	
	918812	6		2	72	Plate	
31	120161	1	4	4		Hex. cap screw	
32	120126	7	4	4		Hex. cap screw	
33	120100	3	2	2		Hex. cap screw	
34	353308	4	2	2		Hex. lock nut	
35	422634	9	2	2		Clip	
36	379386	8	2	2		Spring retainer	0.9

ROGER

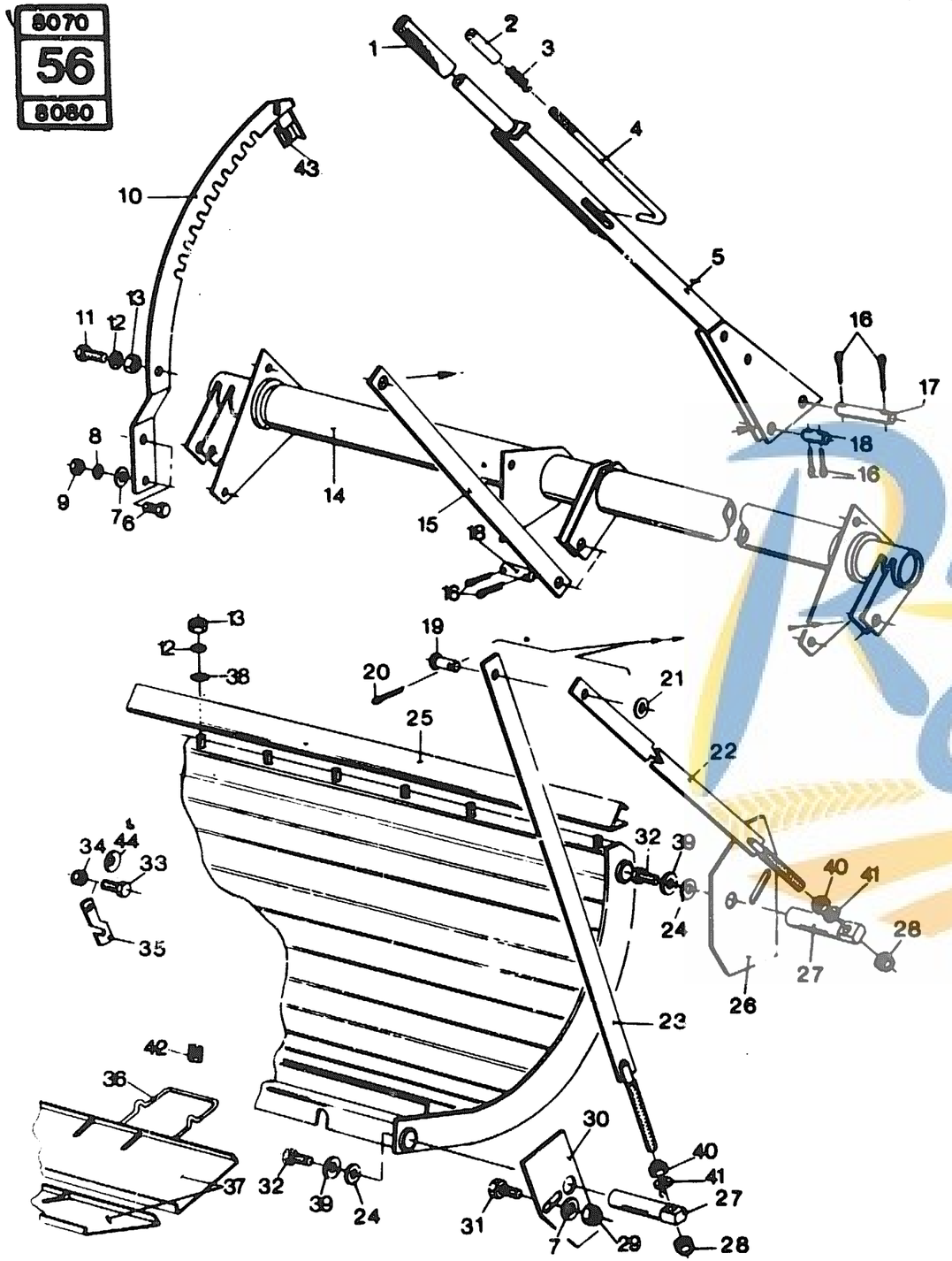

CONCAVE ADJUSTMENT LEVER
COMMANDE CONTRE-BATTEUR
DRESCHKORB STEUERHEBEL
COMANDO DEL CONTROBATTITORE
DORSKORFBEDIENING

MODEL 8070 - 8080

Fig.	Order Ref.	CD	8070	8080	Code	Description	N.B.
37	394316	0	4			Awning plate	
	390745	7		4		Awning plate	
38	378244	7	8	8		Plain washer	
39	482305	4	4	4		Plain washer	
40	100020	9	4	4		Hex. nut	
41	049637	2	4	4		Plain washer	
42	426735	7	4	4		Captive nut	
43	428834	9	1	1		Bracket	
44	300366	3	AR	AR		Cupped washer	

Michel ROGER

https://michelroger.be 129

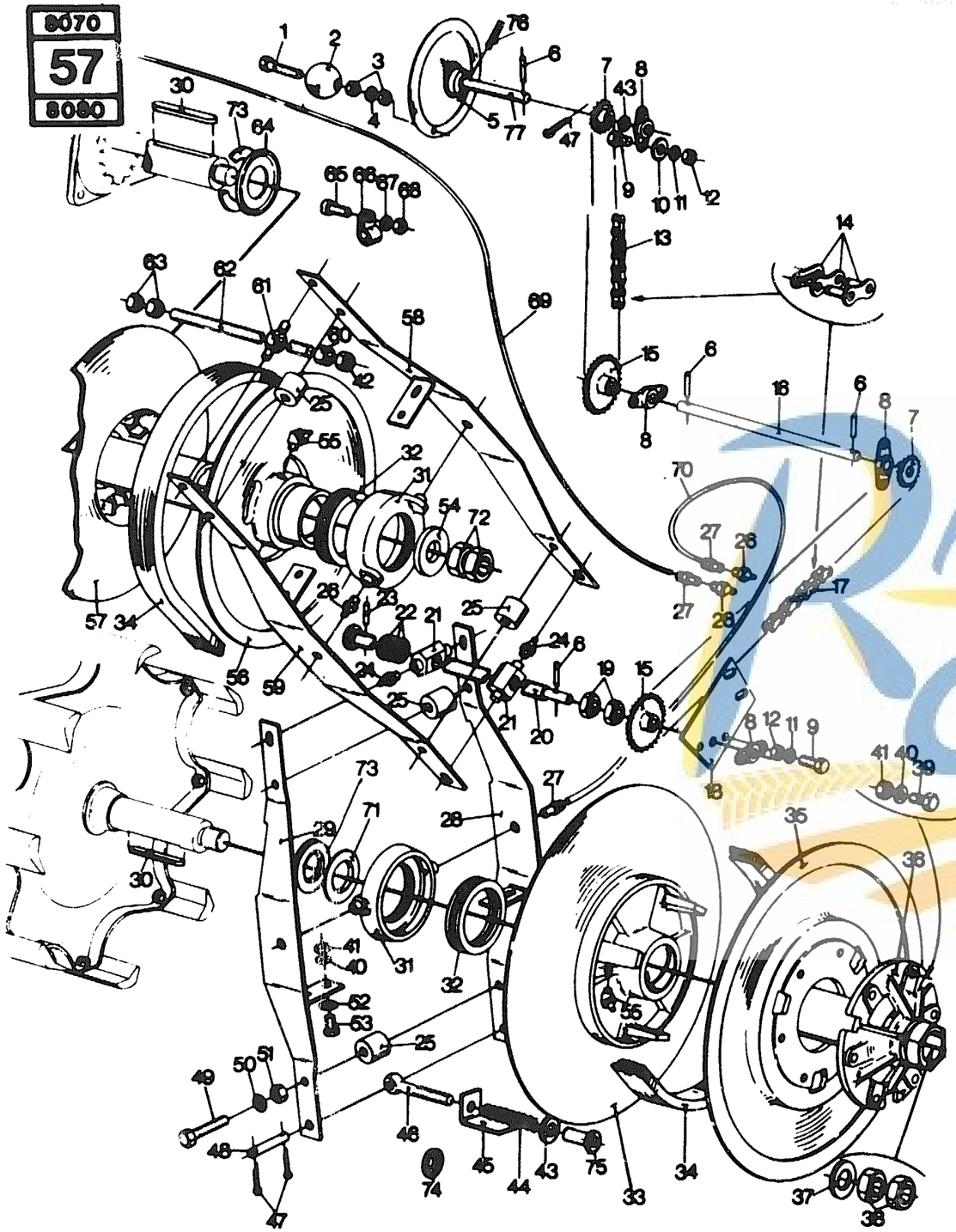

DRUM VARI-DRIVE AND SUSPENSION LINKAGE
VARIATEUR DU BATTEUR – COMMANDE & GRAISSAGE PRINCIPAL
TROMMELVARIATOR – BEDIENUNG & HAUPTSCHMIERUNG
VARIATORE DEL BATTITORE E COMANDO – LUBRIFICAZIONE CENTRALE
TROMMELVARIATOR – BEDIENING & CENTRALE SMERING

MODEL 8070 - 8080

Fig.	Order Ref.	CD	8070	8080	Code	Description	N.B
1	397985 0		1	1		Hex. cap screw	
2	330022 1		1	1		Crank ball	
3	100014 6		2	2		Hex. nut	
4	322357 0		1	1		Tooth lockwasher	
5	428827 4		1	1		Handwheel	
6	130078 6		4		858	Roll pin	
	130045 7		4		73	Roll pin	
	130078 6			4	619	Roll pin	
	130045 7			4	58	Roll pin	
7	374180 7		2		858	Sprocket	
	922838 6		2		73	Sprocket	
	374180 7			2	619	Sprocket	
	922838 6			2	58	Sprocket	
8	334707 7		4	4		Flange bearing	
9	120104 1		8	8		Hex. cap screw	
10	378243 5		10	10		Plain washer	
11	322358 2		10	10		Tooth lockwasher	
12	100015 8		10	10		Hex. nut	
13	390360 9		1	1		Chain assembly	Incl fig 14
14	362816 2		AR	AR		Coupler link	
15	368253 4		2		858	Sprocket	
	922837 4		2		73	Sprocket	
	368253 4			2	619	Sprocket	
	922837 4			2	58	Sprocket	
16	390310 4			1		Shaft	
	394745 9		1			Shaft	
17	390359 6		1	1		Chain assembly	Incl fig.14
18	388995 0		1		344	Support	
	388995 0			1	326	Support	
	442271 3		1		849	Support	
	388995 0		1		61	Support	
	442271 3			1	524	Support	
	388995 0			1	48	Support	
19	394202 9		2	2		Hex.nut	
20	388991 2		1		858	Adjusting screw	
	922833 6		1		73	Adjusting screw	
	388991 6			1	619	Adjusting screw	
	922833 6			1	58	Adjusting screw	
21	394201 7		2	2		Pivot nut	
22	356526 9		4	4		Pivot washer	

https://michelroger.be 130

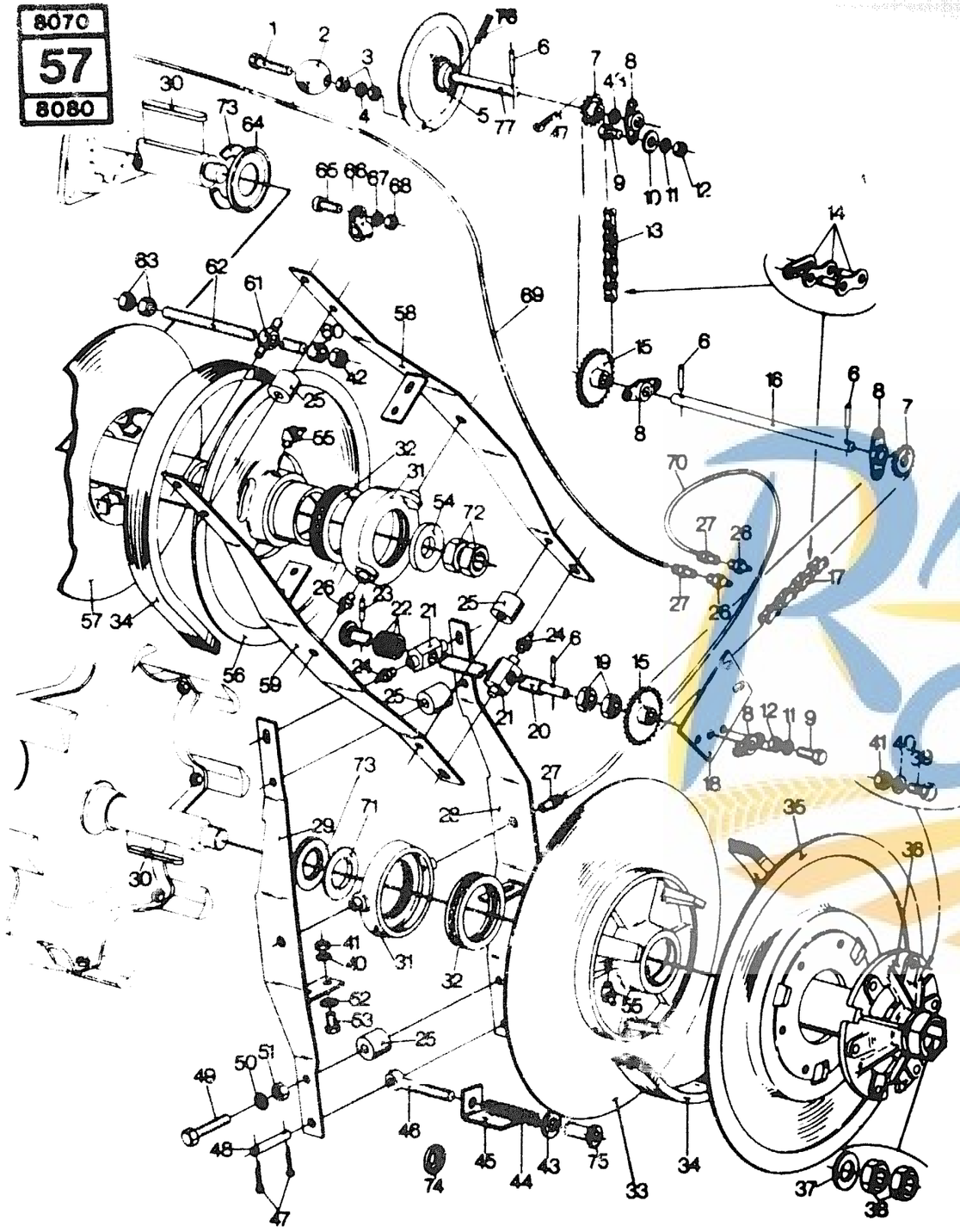

DRUM VARI-DRIVE AND SUSPENSION LINKAGE
VARIATEUR DU BATTEUR – COMMANDE & GRAISSAGE PRINCIPAL
TROMMELVARIATOR – BEDIENUNG & HAUPTSCHMIERUNG
VARIATORE DEL BATTITORE E COMANDO – LUBRIFICAZIONE CENTRALE
TROMMELVARIATOR – BEDIENING & CENTRALE SMERING

MODEL 8070 - 8080

Fig.	Order Ref.	CD	8070	8080	Code	Description	N.B
23	130047 1		1		858	Roll pin	
	412660 2		1		73	Roll pin	
	130047 1			1	619	Roll pin	
	412660 2			1	58	Roll pin	
24	321204 6		2	2		Grease fitting	
25	200098 3		4	4		Bushing	
26	332038 6		3	3		Grease fitting	
27	353145 8		4	4		Connector	0.3
28	389000 4		1	1		Thrust arm	2.0
29	388997 4		1	1		Thrust arm	
30	170047 9		2	2		Flat key	
31	389005 4		2	2		Bearing housing	1.9
32	388068 5		2	2		Thrust bearing	1.6
33	388158 6		1	1		Variator disc. Inner	1.4
34	387460 6		1	1		"V" belt	1.7
35	388156 2		1	1		Variator disc. Outer	
36	388157 4		1		328	Hub	1.4
	388157 4			1	325	Hub	
	439684 3			1	35	Hub	
	439684 3		1		38	Hub	
37	**411961 9**		1	1		Washer	0.4
38	410715 7		1	1		Hex. nut	
39	120112 8		6	6		Hex. cap screw	
40	140045 9		10	10		Tooth lockwasher	
41	100016 0		10	10		Hex. nut	
42	100039 8		1	1		Hex. lock nut	
43	428262 6		1	1		Plain washer	
44	428263 8		1	1		Tension spring	
45	433202 7		1	1		Indicator plate	
46	412254 1		1	1		Eye bolt	
47	130007 7		1	1		Cotter pin	
[illegible]	308853 4		1	1		Pivot pin	
49	120084 7		4	4		Hex. cap screw	
50	140046 1		4	4		Tooth lockwasher	
51	327475 7		4	4		Hex. nut	
[illegible]	378244 7		2	2		Plain washer	
53	120111 6		4	4		Hex. cap screw	
54	140116 0		1	1		Plain washer	0.4
55	323787 2		2	2		Grease fitting	
56	388048 3		1	1		Variator disc. outer	1.1
57	388159 8		1	1		Variator disc. inner	1.6

https://michelroger.be 131

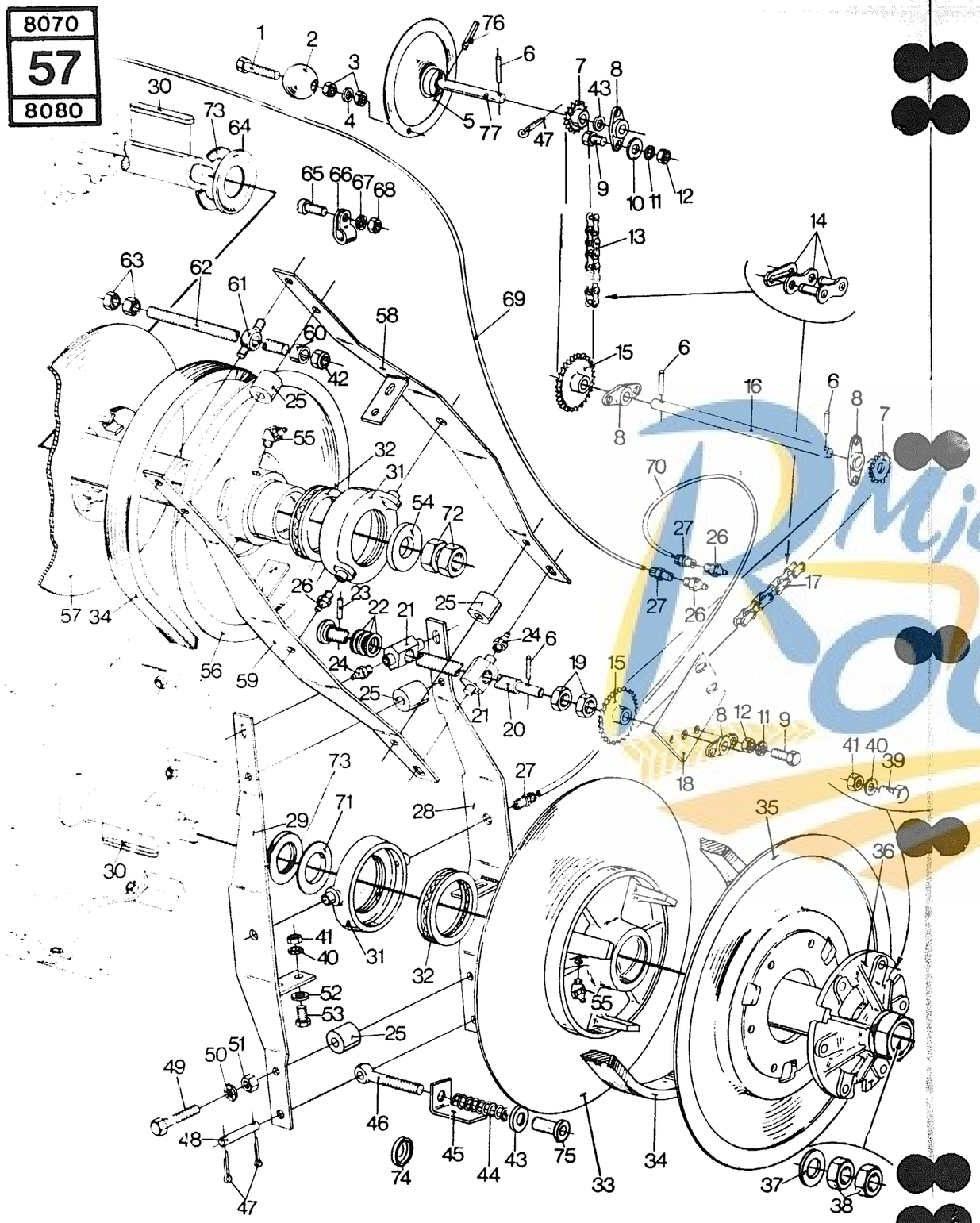

205A

DRUM VARI-DRIVE AND SUSPENSION LINKAGE
VARIATEUR DU BATTEUR – COMMANDE & GRAISSAGE PRINCIPAL
TROMMELVARIATOR – BEDIENUNG & HAUPTSCHMIERUNG
VARIATORE DEL BATTITORE E COMANDO – LUBRIFICAZIONE CENTRALE
TROMMELVARIATOR – BEDIENING & CENTRALE SMERING

MODEL 8070 - 8080

Fig.	Order Ref.	CD	8070	8080	Code	Description	N.B
58	389003 0		1	1		Thrust arm	1.1
59	389002 8		1	1		Thrust arm	1.1
60	359674 5		1	1		Bushing	
61	362183 9		1	1		Hinge piece	
62	386289 1		1	1		Threaded rod	
63	100020 9		2	2		Hex. nut	
64	388254 0		1	1		Seal ring	
65	120007 5		3	3		Screw	
66	353072 3		3	3		Clamp	
67	322355 6		3	3		Tooth lockwasher	
68	100012 2		3	3		Hex. nut	
69	395623 2		1	1		Grease line	
70	395622 0		1	1		Grease line	
71	397619 5		1	1		Stop collar	
72	100034 8		1	1		Hex. nut	
73	354133 4		5	5		Spacer ring	
74	433201 5		1	1		Cup washer	
75	428261 4		1	1		Special nut	
76	130043 3		1	1		Roll pin	
77	428629 8		1		858	Shaft	
	922834 8		1		73	Shaft	
	428829 8			1	619	Shaft	
	922834 8			1	58	Shaft	

https://michelroger.be

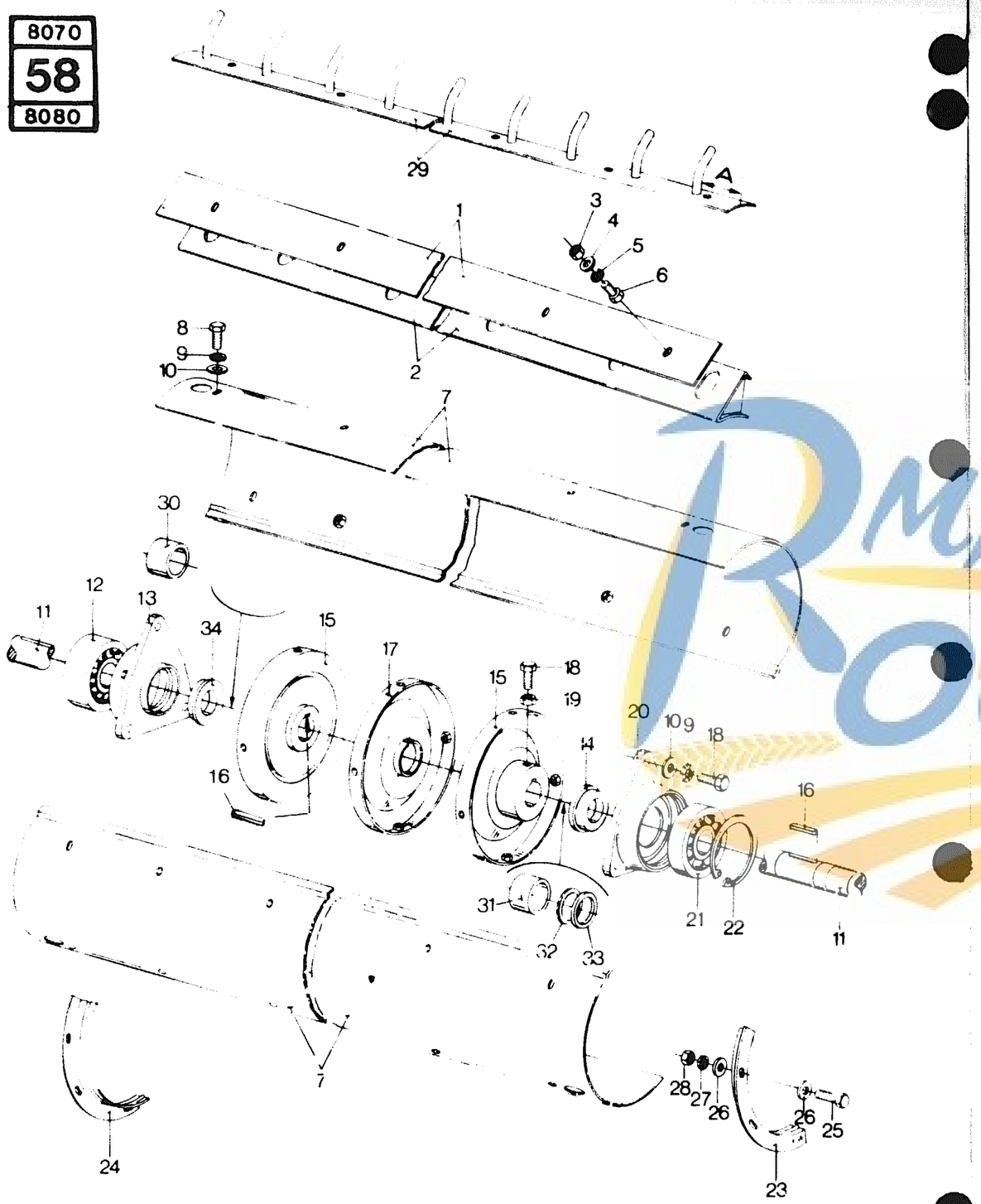

REAR BEATER
TIRE PAILLE
STROHABNEHMER
MULINELLO
AFNEEMTROMMEL

MODEL 8070 - 8080

Fig.	Order Ref.	CD	8070	8080	Code	Description		N.B
1	391492 9			4		Adjusting plate	0.8	
	394369 1		4			Adjusting plate		
2	391506 0			4	624	Mounting plate	1.0	
	950838 4			4	625	Mounting plate	1.0	
	394368 9		4		865	Mounting plate	1.0	
	9508384 9		4		866	Mounting plate	1.0	
3	100015 8		24	24		Hex. nut		
4	378243 5		24	24		Plain washer		
5	322358 2		24	24		Tooth lockwasher		
6	120104 1		24	24		Hex. cap screw		
7	391432 3			2		Beater half	9.0	
	394389 3		2			Beater half		
8	120110 4		29	29		Hex. cap screw		
9	140045 9		34	34		Tooth lockwasher		
10	378244 7		34	34		Plain washer		
11	426224 4			1		Shaft	8.5	
	426225 6		1			Shaft		
12	391084 4		1	1		Bearing	2.7	
13	388747 5		1	1		Bearing housing		
14	388669 9		1	1		Ring, LH	5.2	
15	393379 1		2	2		Disc	8.8	
16	426211 7		2	2		Flat key	8.6	
17	395558 3		1	1		Disc	8.8	
18	120201 7		8	8		Hex. cap screw		
19	320648 5		2	2		Hex. nut		
20	388748 7		1	1		Bearing housing	5.1	
21	388069 7		1	1		Ball bearing	5.2	
22	301652 1		1	1		Circlip		
23	333657 9		1	1		Angle, Anti-wrap, LH	0.5	
24	333656 7		1	1		Angle, Anti-wrap, RH		
25	120100 3		6	6		Hex. cap screw		
26	418538 9		12	12		Plain washer		
27	322357 0		6	6		Tooth lockwasher		
28	100014 6		6	6		Hex. nut		
29	391430 9			2	329	Beater bar		A = 20 mm (25/32") – Accessory
	446023 2			2	39	Beater bar		
	394366 5		2		347	Beater bar		A = 20 mm (25/32") – Accessory
	446025 6		2		44	Beater bar		
	391431 1			2	329	Beater bar	0.8	A = 85 mm (3 11/32") – Accessory
	446024 4			2	39	Beater bar		
	394365 3		2		347	Beater bar		A = 85 mm (3 11/32") – Accessory
	446026 8		2		44	Beater bar		
30	410446 6		1	1		Bushing	2.8	

https://michelroger.be 133

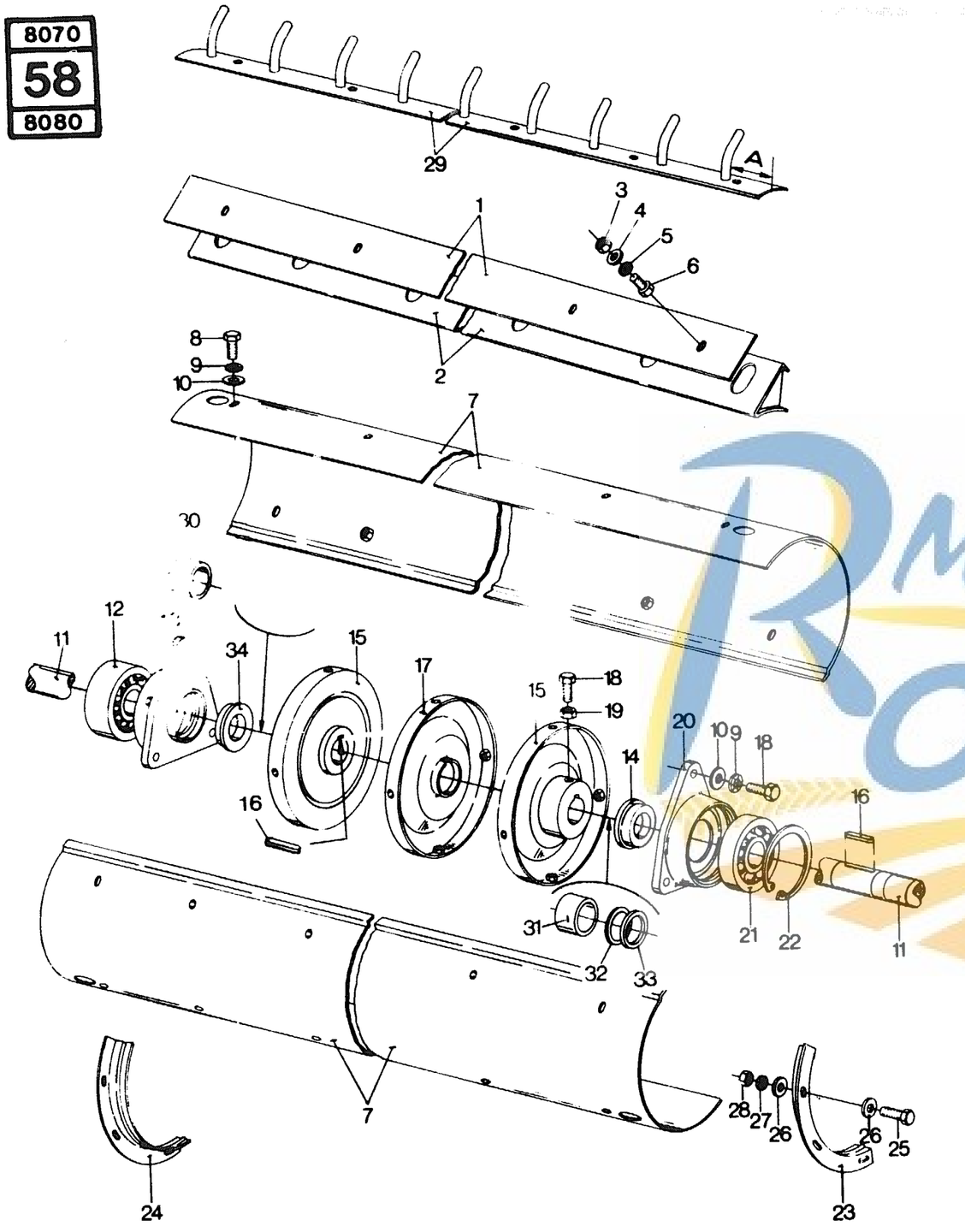

REAR BEATER
TIRE PAILLE
STROHABNEHMER
MULINELLO
AFNEEMTROMMEL

Fig.	Order Ref.	CD	8070	8080	Code	Description	N.B.
31	200167	0	1	1		Bushing	
32	410447	8	AR	AR	5.2	Shim washer	Thickness 1 mm (.039")
33	354133	4	AR	AR	5.2	Shim washer	Thickness 2 mm (.080")
34	442711	7	1	1		Ring, RH	

https://michelroger.be 134

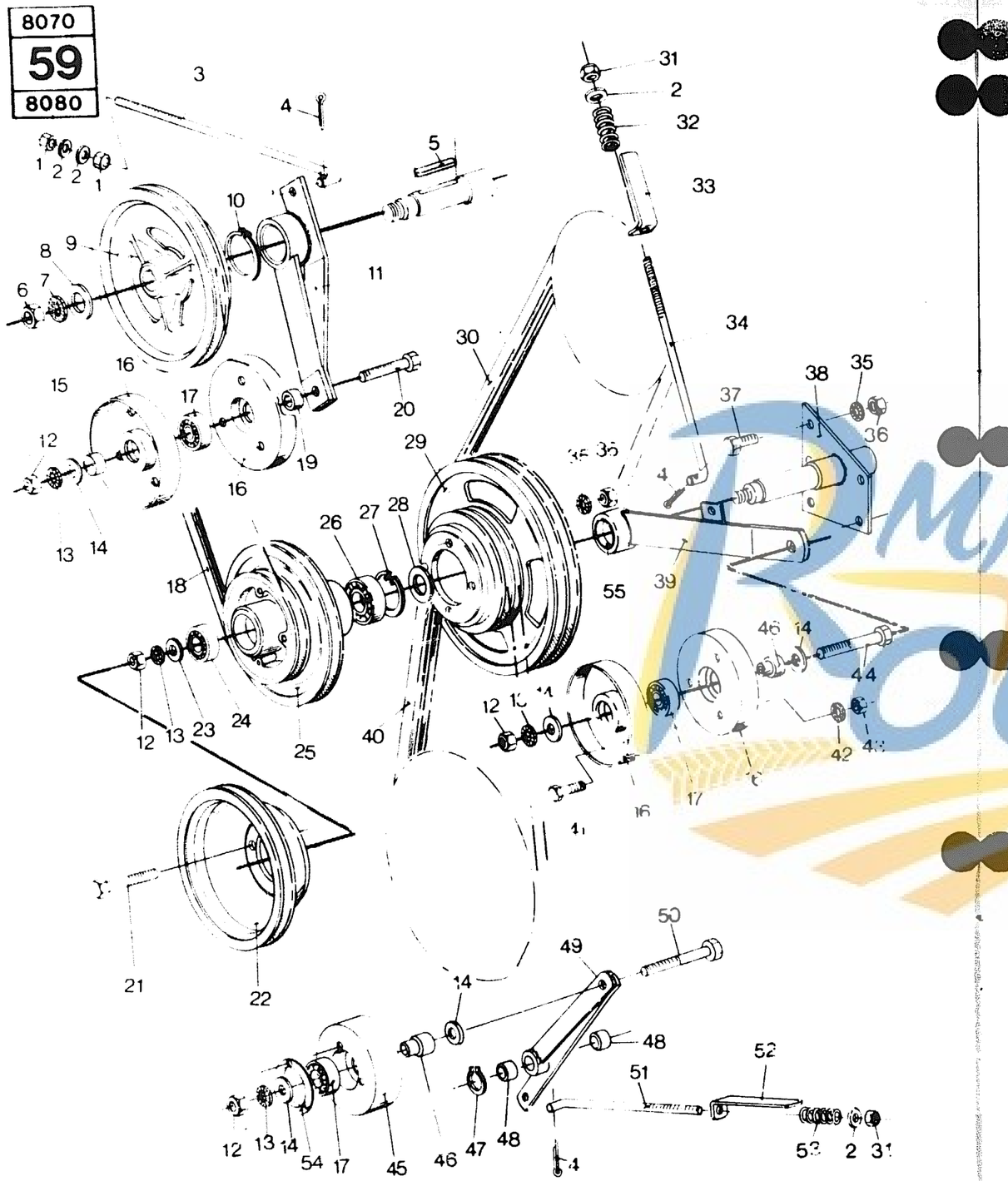

COUNTER SHAFT AND DRIVE GROUP
ARBRE INTERMEDIAIRE
ZWISCHENWELLE UND ANTRIEB
ALBERO INTERMEDIO E COMANDO
TUSSENAS & AANDRIJVING

MODEL 8070 - 8080

Fig.	Order Ref.	CD	8070	8080	Code	Description	N.B.
1	337475 7		2	2		Hex. nut	
2	378245 9		3	3		Washer	
3	396015 4			1	308	Adjusting rod	
	435728 3			1	32	Adjusting rod	
	435728 3		1			Adjusting rod	
4	130004 1		3	3		Cotter pin	
5	170052 0		1	1		Flat key	1.0
6	100024 7		1	1		Hex. nut	
7	321245 2		1	1		Tooth lockwasher	
8	378248 5		1	1		Washer	
9	395999 7		1	1		Pulley	0.9
10	301624 2		1	1		Circlip	
11	396013 0		1	1		Idler arm	1.3
12	100020 9		3			Hex. nut	
13	140048 5		4	4		Tooth lockwasher	
14	378246 1		AR	AR		Plain washer	
15	324622 5		1	1		Bushing	1.0
16	396863 1		4	4		Idler half	0.9
17	034439 5		3	3		Ball bearing	1.0
18	395955 5		1	1		"V" belt	0.8
19	325842 2		1	1		Bushing	0.7
20	374889 9		1	1		Hex. cap screw	
21	120072 2		4	4		Hex. cap screw	
22	396000 3		1	1		Pulley	1.6
23	325594 5		1	1		Washer	
24	210043 0		1	1		Ball bearing	1.6
25	395997 3		1	1		Pulley	
26	025953 4		1	1		Ball bearing	
27	370018 0		1	1		Circlip	
28	393030 3		1	1		Ring	
29	395998 5		1	1		Pulley	1.6
30	396750 2			1	326	"V" belt (Set of 2)	
	396750 2		1		344	"V" belt (Set of 2)	
	437033 2			1	36	"V" belt (Set of 2)	
	437033 2		1		41	"V" belt (Set of 2)	
31	412126 0		2	2		Hex. lock nut	
32	180020 5		1	1		Spring	
33	392680 9		1	1		Indicator plate	0.5
34	389172 7			1	326	Adjusting rod	
	389172 7		1		344	Adjusting rod	
	444800 8			1	36	Adjusting rod	
	444800 8		1		41	Adjusting rod	

https://michelroger.be 135

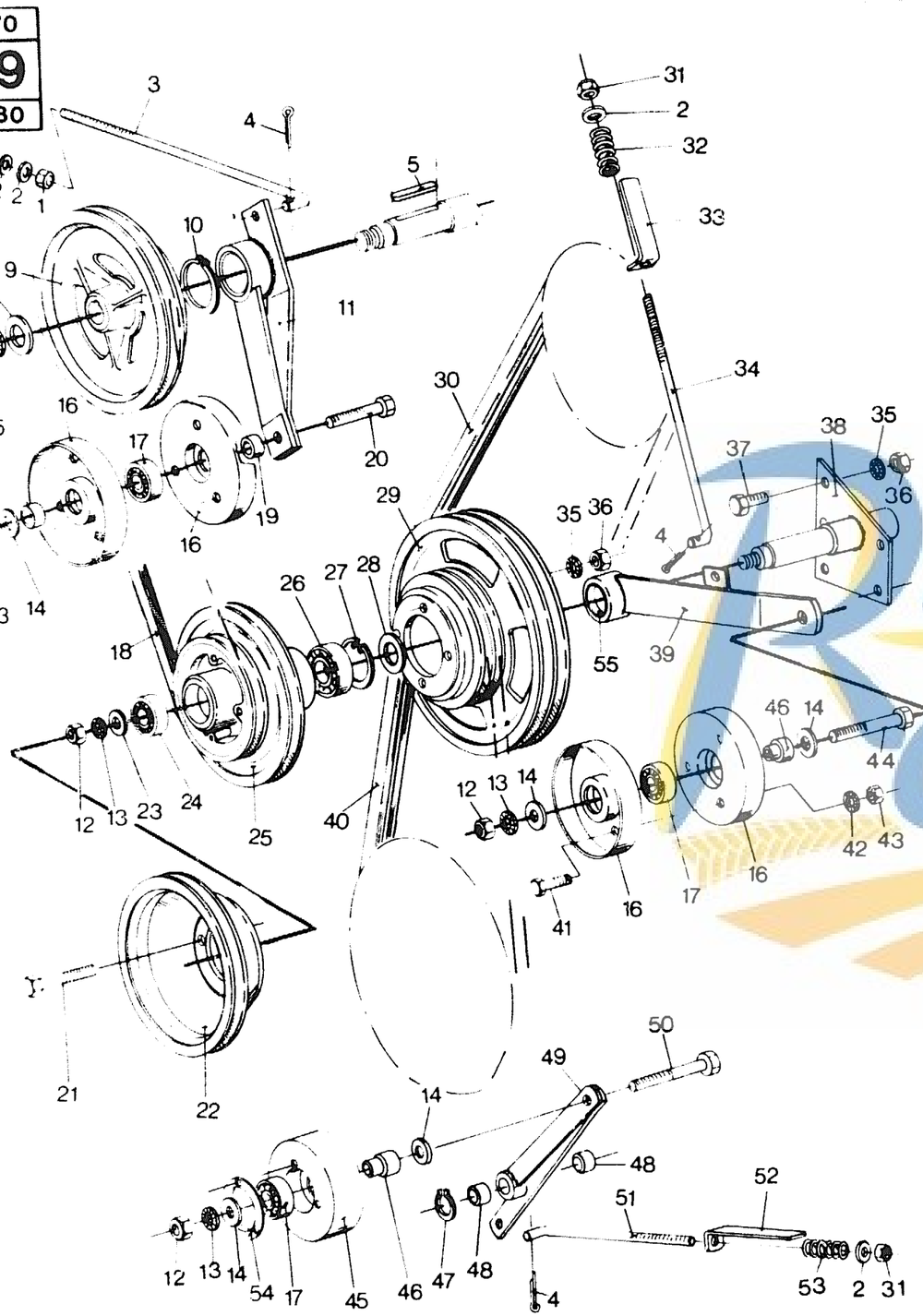

COUNTER SHAFT AND DRIVE GROUP
ARBRE INTERMEDIAIRE
ZWISCHENWELLE UND ANTRIEB
ALBERO INTERMEDIO E COMANDO
TUSSENAS & AANDRIJVING

MODEL 8070 - 8080

Fig.	Order Ref.	CD	8070	8080	Code	Description		N.B
35	140045	9	9	9		Tooth lockwasher		
36	100016	0	9	9		Hex. nut		
37	120110	4	5	5		Hex. cap screw		
38	392967	7	1	1		Support half		
39	391514	7	1	1		Idler arm		Incl.fig.55
40	378989	5	1	1		"V" belt (Set of 2)	1.7	
41	120103	9	6	6		Hex. cap screw		
42	322358	2	6	6		Tooth lockwasher		
43	100015	8	6	6		Hex. nut		
44	350616	4	1	1		Hex. cap screw		
45	391080	6	1	1		Idler	0.9	
46	200073	1	1	1		Bushing	1.0	
47	370002	7	1	1		Circlip		
48	382975	2	2	2		Bushing	0.7	
49	391609	8	1	1		Pivot lever		Incl.fig.48
50	120093	6	1	1		Hex. cap screw		
51	389173	9	1	1		Adjusting rod		
52	393374	1	1	1		Indicator plate		
53	337829	8	1	1		Spring		
54	410462	0	1	1		Attachment ring		
55	391543	8	2	2		Bushing		

ROGER

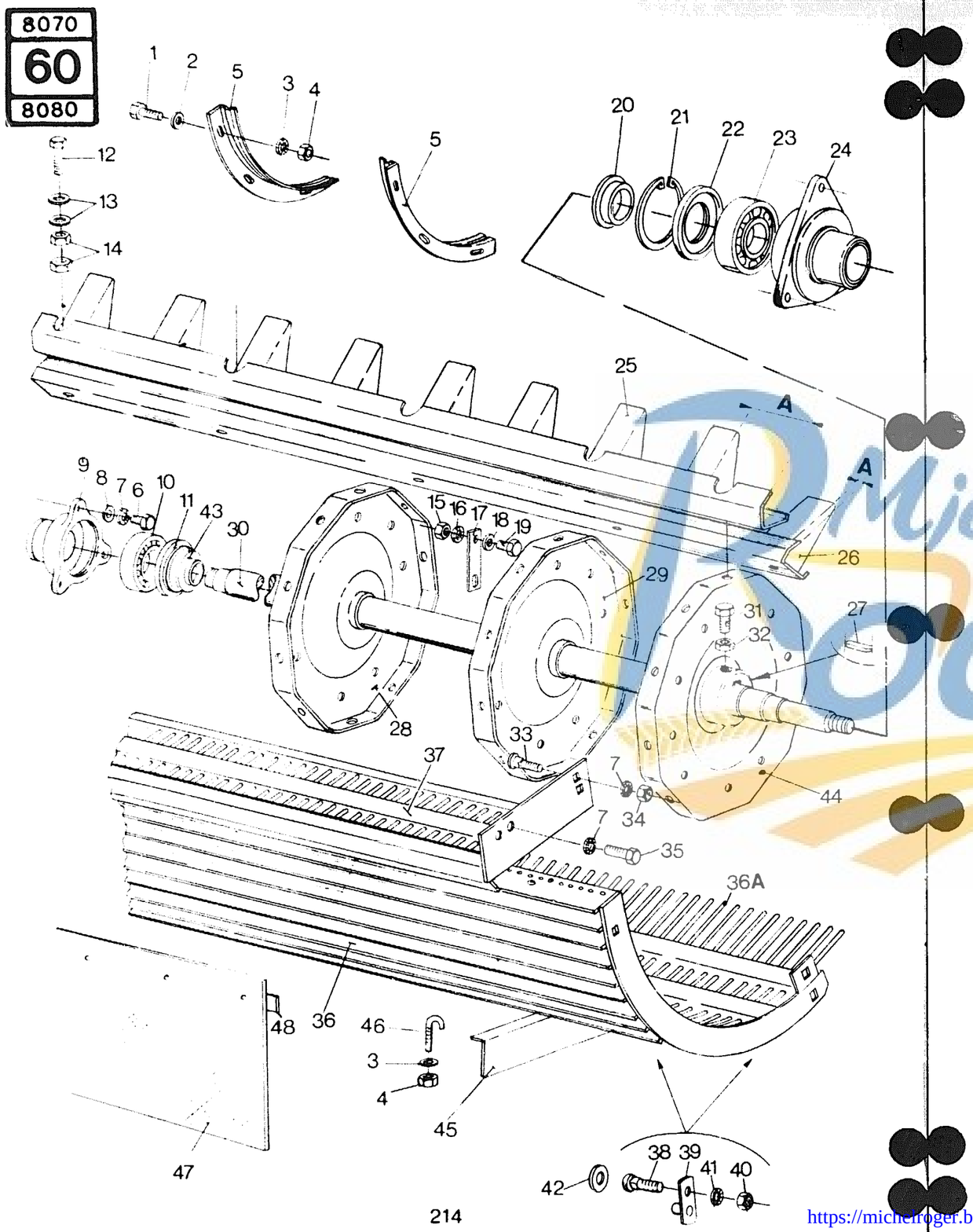

ROTARY SEPARATOR
SEPARATEUR ROTATIF
ROTIEREN[illegible] ABSCHEIDER
SEPARATORE ROTATIVO
ROTERENDE AFSCHEIDER

MODEL 8070 - 8080

Fig.	Order Ref.	CD	8070	8080	Code	Description		N.B
1	120099 8		4	4		Hex. cap screw		
2	418538 9		4	4		Pin washer		
3	322357 0		4	4		Tooth lockwasher		
4	100014 6		4	4		Hex. nut		
5	387312 3		2	2		Angle, Anti-wrap	0.5	
6	120111 6		6	6		Hex. cap screw		
7	140045 9		10	10		Tooth lockwasher		
8	378244 7		6	6		Plain washer		
9	396006 5		1	1		Bearing housing	1.5	
10	210049 2		1	1		Ball bearing		
11	200020 0		1	1		Circlip		
	417605 1		1	1		Circlip		
12	385376 5		50	50		Hex. cap screw		
13	362298 2		100	100		Plain washer		
14	337475 7		52	52		Hex. nut		
15	100015 8		AR	AR		Hex. nut		
16	322358 2		AR	AR		Tooth lockwasher		
17	481494 2		AR	AR		Balance plate		
18	378243 5		AR	AR		Plain washer		
19	120104 1		AR	AR		Hex. cap screw		
20	388669 9		1	1		Ring	7.6	
21	301652 1		1	1		Circlip		
22	388937 8		1	1		Ring		
23	388069 7		1	1		Ball bearing	7.6	
24	388938 0		1	1		Bearing flange		
25	387049 4			5		Toothed rake	2.5	A = 115 mm (4 17/32")
	391503 4		5		854	Toothed rake	2.5	A = 122 mm (4 13/16")
	753454 1		5		66	Toothed rake	2.5	
26	387048 2			5		Toothed rake	2.5	A = 24 mm (15/16")
	391504 6		5		854	Toothed rake	2.5	A = 31 mm (1 7/32")
	753455 9		5		66	Toothed rake	2.5	
27	426211 7		2	2		Flat key	9.5	
28	387775 3		1	1		Separator disc. RH	13.5	
29	387774 1		3	3		Separator disc. centre	13.5	
30	426374 1			1		Shaft	9.5	
	426544 2		1			Shaft	9.5	
31	120201 7		2	2		Hex. cap screw		
32	320648 5		2	2		Hex. nut		
33	338949 3		2	2		Carriage bolt		
34	100016 3		2	2		Hex. nut		
35	120110 4		2	2		Hex. cap screw		

https://michelroger.be

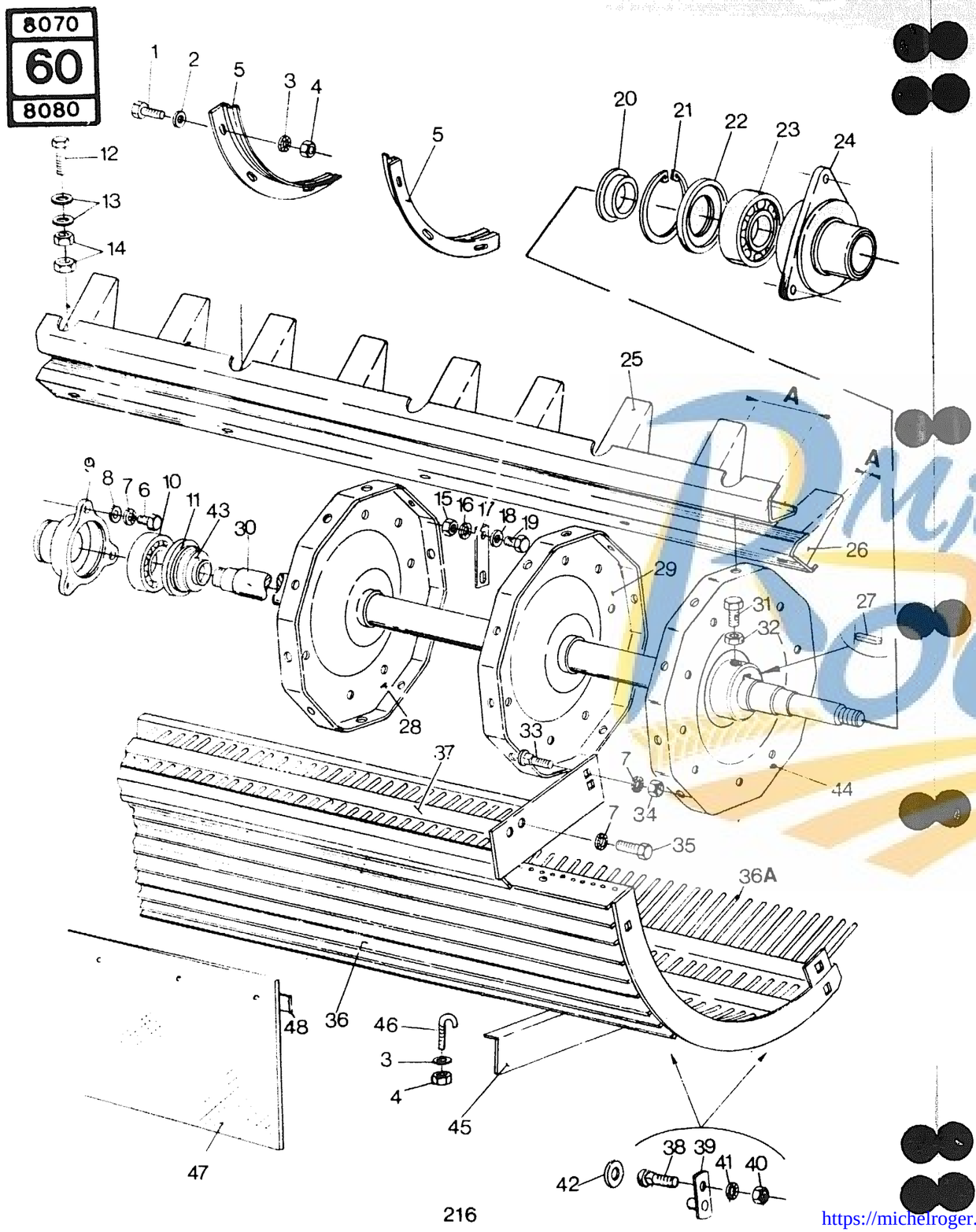

ROTARY SEPARATOR
SEPARATEUR ROTATIF
ROTIERENDE ABSCHEIDER
SEPARATORE ROTATIVO
ROTERENDE AFSCHEIDER

MODEL 8070 - 8080

Fig.	Order Ref.	CD	8070	8080	Code	Description	N.B.
36	387753 7			1		Concave w/a	9.0
	391530 1		1			Concave w/a	
36A	487060 9		AR	AR		Concave wire	
37	390520 9			1		Intermediate rake	1.0
	391507 2		1			Intermediate rake	
38	328430 2		4	4		Carriage bolt	
39	375109 8		4	4		Bracket	
40	337475 7		4	4		Hex. nut	
41	140046 1		4	4		Tooth lockwasher	
42	378245 9		2	2		Plain washer	
43	417605 1			1		Ring	
	200020 0		1			Ring	
44	426182 4		1	1		Separator disc, LH	13.5
45	425159 4		2	2		Plate	
46	359726 6		4	4		Hook	0.7
47	748036 4			1	48	Canvas	
	748037 6		1		61	Canvas	
48	457881 3			1	48	Lath	
	457879 8		1		61	Lath	

https://michelroger.be 138

Michel ROGER GROUP

61 ➧ 67

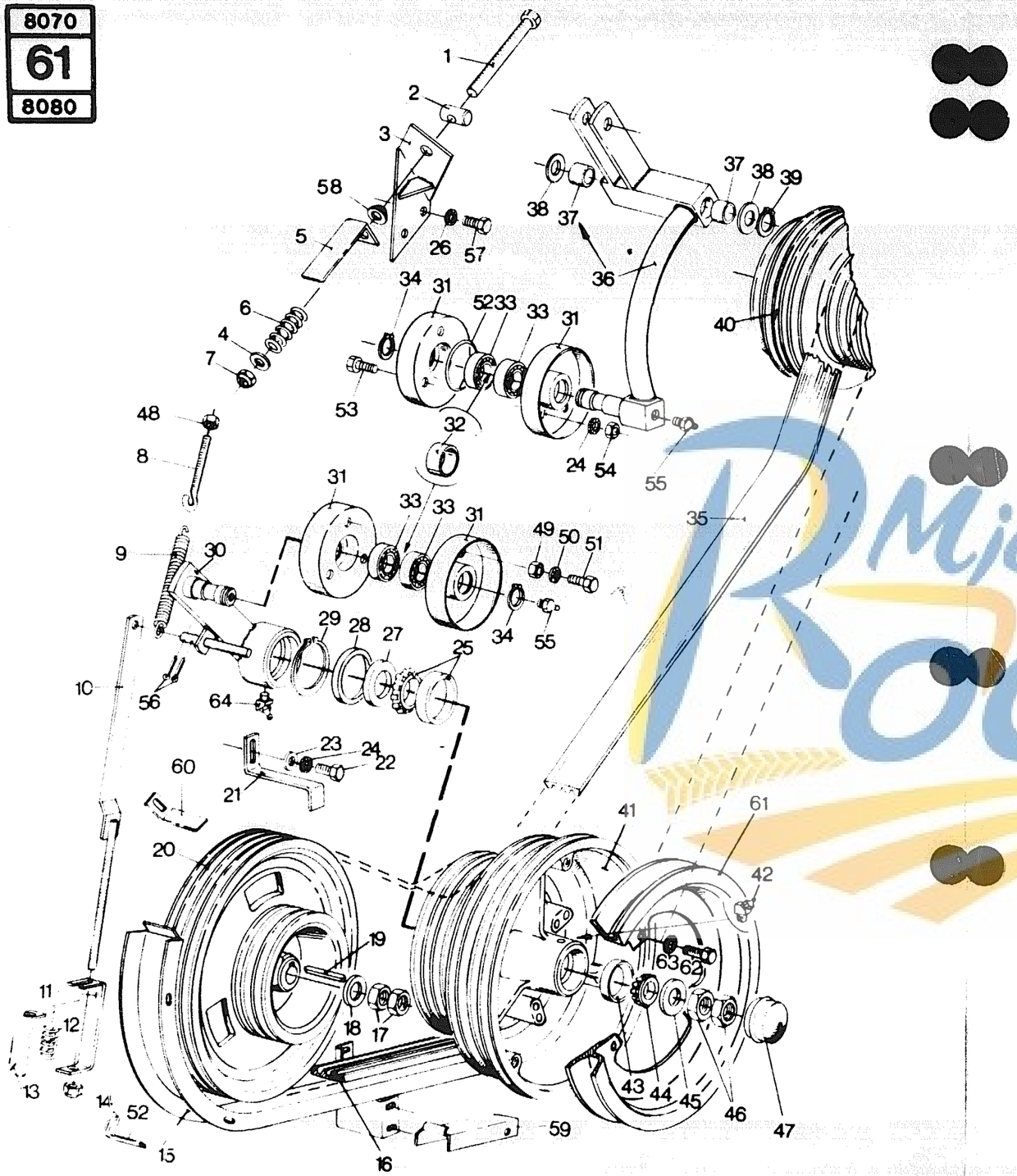

MAIN DRIVE IDLER
GALET TENDEUR PRINCIPAL
SPANNROLLE
TENDICINGHIA PRINCIPALE
HOOFDSPANROL

MODEL 8070 - 8080

Fig.	Order Ref.	CD	8070	8080	Code	Description	N.B.	
1	389793	3	1	1		Hex. cap screw		
2	321886	0	1	1		Pivot shaft		
3	389794	5	1	1		Bracket	1.5	
4	325594	5	1	1		Plain washer		
5	390506	9	1	1		Indicator plate		
6	392328	3	1	1		Spring		
7	412066	2	1	1		Hex. lock nut		
8	330590	4	1	1		Eye bolt	0.9	
9	391151	7	1	1		Spring	0.4	
10	390157	8	1	1		Adjusting link		
11	396254	0	1	1		Support		
12	180020	5	1	1		Spring		
13	392680	9	1	1		Indicator plate		
14	412126	0	1	1		Hex. lock nut		
15	420914	1	1	1		Belt guard	3.0	
16	387454	3	1		643	Powerband belt	6.5	
	451481	9	1		52	Powerband belt		
	387454	3		1	334	Powerband belt		
	451481	9		1	44	Powerband belt		
17	100034	8	2	2		Hex. jam nut		
18	327802	0	1	1		Washer		
19	170058	2	1	1		Flat key	4.1	
20	387949	2	1	1		Pulley		
21	419006	3	1	1		Belt guide		
22	120104	1	1	1		Hex. cap screw		
23	378243	5	13	13		Washer		
24	322358	2	16	16		Tooth lockwasher		
25	334200	3	1	1		Bearing	7.6	
26	140045	9	1	1		Bearing		
27	388963	3	1	1		Bushing		
28	300904	5	1	1		Grease seal	7.6	
29	300637	8	1	1		Circlip	7.5	
30	411132	2	1	1		Idler arm		
31	391080	6	4	4		Idler half		
32	410087	4	1	1		Bushing		
33	210075	7	4	4		Ball bearing		
34	370002	7	2	2		Circlip	1.0	
35	391650	5	1	1		Powerband belt	2.1	
36	397097	7	1	1		Idler arm	1.1	Incl.fig.37
37	420434	3	2	2		Bushing		
38	140108	3	AR	AR		Washer		
39	370003	9	1	1		Circlip		

https://michelroger.be 140

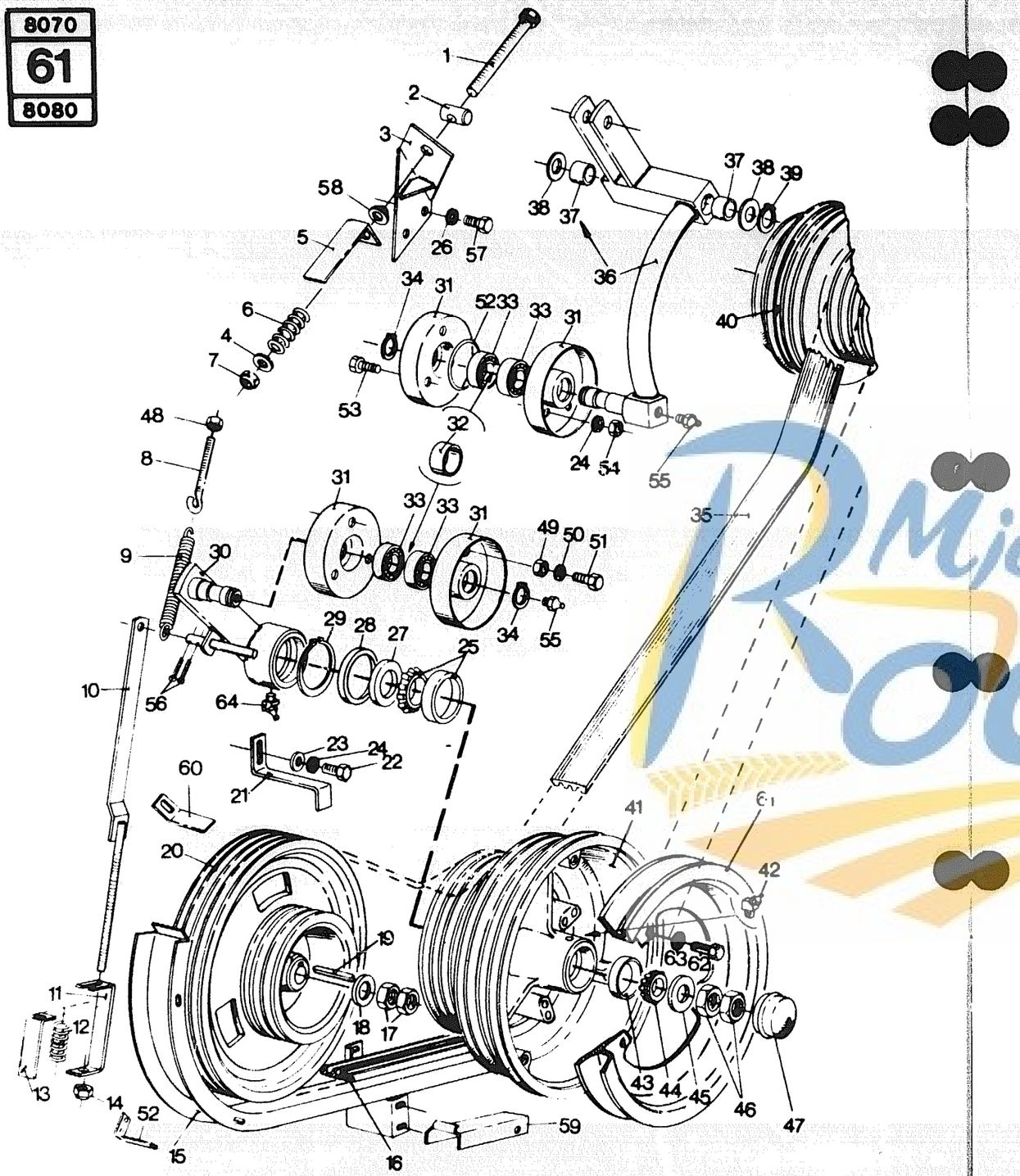

MAIN DRIVE IDLER
GALET TENDEUR PRINCIPAL
SPANNROLLE
TENDICINGHIA PRINCIPALE
HOOFDSPANROL

MODEL 8070 - 8080

Fig.	Order Ref.	CD	8070	8080	Code	Description		N.B.
40	397275	5	1	1		Main drive pulley	4.3	Hydrostatic drive
	410671	3	1	1		Main drive pulley		
41	410779	1	1	1		Pulley	7.4	Mechanical drive
42	323787	2	1	1		Grease fitting		
43	048976	9	1	1		Bearing cup	7.4	
44	048977	1	1	1		Bearing cone	7.1	
45	411976	0	1	1		Washer		
46	100033	6	2	2		Hex. jam nut		
47	321148	6	1	1		Cover	0.4	
48	100067	7	1	3		Hex. lock nut		
49	100014	6	3	3		Hex. nut		
50	322357	0	3	3		Tooth lockwasher		
51	120099	8	3	3		Hex. cap screw		
52	426034	1	1	1		Bracket		
53	120103	9	3	3		Hex. cap screw		
54	100015	8	3	3		Hex. nut		
55	321204	6	4	4		Grease fitting		
56	130003	9	2	2		Cotter pin		
57	120109	1	4	4		Hex. cap screw		
58	487828	7	1	1		Ball hinge	0.9	
59	425266	1	1	1		Belt guide		
60	420909	0	1	1		Bracket		
61	399826	6	1			Pulley	1.5	Mechanical drive Normal speed Ø 404
	417575	6		1		Pulley		Mechanical drive Low speed Ø 350
62	120111	6	6	6		Hex. cap screw		
63	140045	9	6	6		Tooth lockwasher		
64	323713	7	1	1		Grease fitting		

ROGER
Michel

https://michelroger.be 141

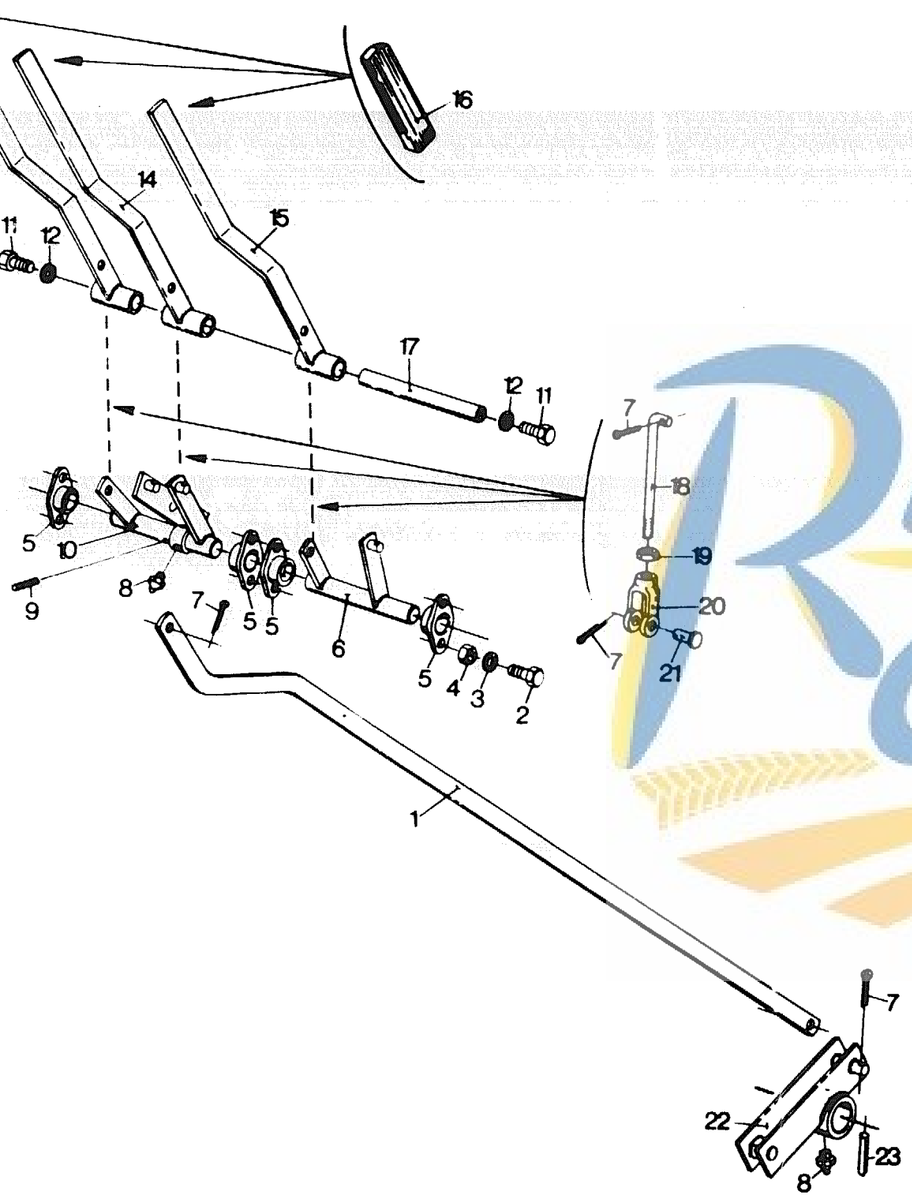

ENGAGING MECHANISM AND LINKAGE
LEVIERS DE COMMANDE ET TRINGLERIE
SCHALTHEBEL UND GESTÄNGE
LEVI COMANDO E BIELLISMO DI COMANDO
SCHAKELHEFBOMEN EN STANGENSTELSEL

MODEL 8070 - 8080

Fig.	Order Ref.	CD	8070	8080	Code	Description	N.B.
1	390167	9	1	1		Connecting link	
2	120103	9	15	15		Hex. cap screw	
3	322358	2	16	16		Tooth lockwasher	
4	100015	8	17	17		Hex. nut	
5	338712	2	4	4		Flange bearing	
6	411051	0	1	1		Pivot shaft	
7	130003	9	10	10		Cotter pin	
8	321204	6	4	4		Grease fitting	
9	130044	5	2	2		Roll pin	
10	390172	0	1	1		Pivot shaft	
11	120109	1	4	4		Hex. cap screw	
12	140045	9	4	4		Tooth lockwasher	
13	390150	4	1	1		Lever	
14	390151	6	1	1		Lever	
15	390152	8	1	1		Lever	
16	332809	1	3	3		Handgrip	
17	390153	0	1	1		Pivot shaft	
18	486087	4	3	3		Connecting rod	0.5
19	100016	0	1	1		Hex. nut	
20	340075	4	1	1		Clevis	
21	322901	5	3	3		Clevis pin	
22	390161	7	1	1		Lever	
23	333960	2	1	1		Roll pin	

MICHEL ROGER

https://michelrogerbe 142

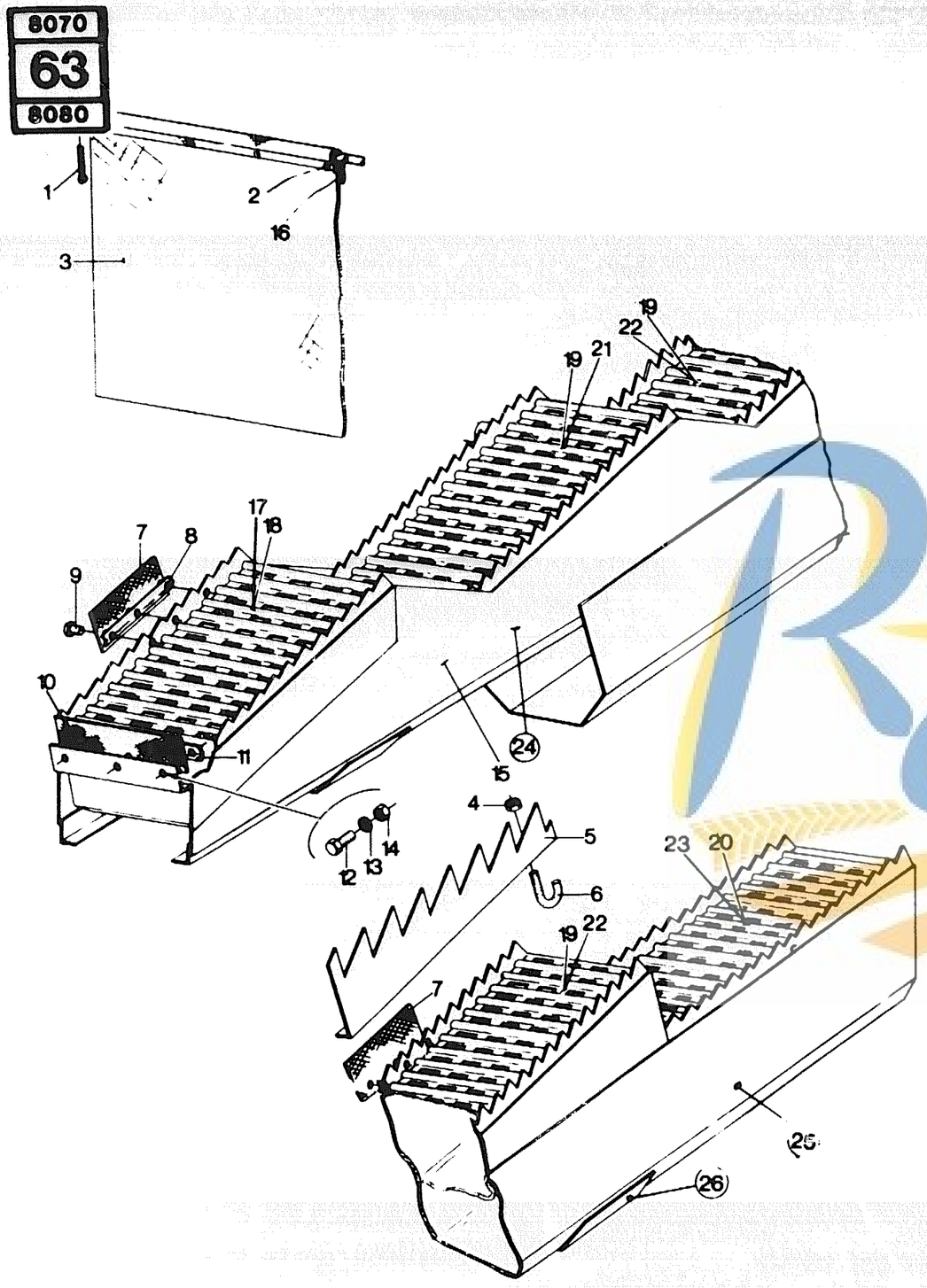

STRAW WALKERS
SECOUEURS A PAILLE
STROHSCHÜTTLER
SCUOTIPAGLIA
STROSCHUDDERS

MODEL 8070-8080

Fig.	Order Ref.	CD	8070	8080	Code	Description		N.B
1	130003 9		2	2		Cotter pin		
2	387691 5			1		Rod	0.5	
	391238 1		1			Rod		
3	394068 3			1		Canvas	0.5	
	394480 7		1			Canvas		
	426949 0		5	6		Canvas		Universal straw walker
4	100014 6		40	40		Hex. lock nut		
5	374412 0		9	10		Fishback	0.5	
6	359726 6		18	20		Hook		
	353893 3		18	20		Hook		Universal straw walker
7	334502 3		4	4		Rubber flap		
8	481560 3		4	4		Retaining strip		
9	130022 9		12	12		Rivet		
10	374535 0		5	6		Rubber flap		
11	320872 0		5	6		Retaining strip		
12	120100 3		15	18		Hex. cap screw		
13	322357 0		25	30		Tooth lockwasher		
14	353308 4		18	18		Hex. nut		
15	421805 1		5		847	Straw walker, Universal straw walker		Incl.figs.18,21,22 (2x) and 23
	421805 1			6	519	Straw walker		
	421804 9		5		61	Straw walker	2.2	Incl.figs.17,19 (3x) and 20
	421804 9			6	48	Straw walker		Incl.figs.17,19 (3x) and 20
16	426950 3			1		Plate		
	427246 1		1			Plate		
17	387364 2		5	6		Straw walker covering		
18	387364 2		5	6		Straw walker covering		Universal straw walker
19	460071 1		15	18		Straw walker covering		
20	333292 5		5	6		Straw walker covering		
21	320855 4		5	6		Straw walker covering		Universal straw walker
22	426845 0		10	12		Straw walker covering		Universal straw walker
23	426846 2		5	6		Straw walker covering		Universal straw walker
24	455564 9			1	48	Split straw walker, front		
	454773 1			1	48	Split straw walker, front		Universal straw walker
	455564 9		1		59	Split straw walker, front		
	454773 1		1		59	Split straw walker, front		Universal straw walker
25	455565 1			1	48	Split straw walker, rear		
	454772 9			1	48	Split straw walker, rear		Universal straw walker
	455565 1		1		59	Split straw walker, rear		
	454772 9		1		59	Split straw walker, rear		Universal straw walker
26	452204 4			1	48	Cover		
	452204 4			1	48	Cover		Universal straw walker
	452204 4		1		59	Cover		
	452204 4		1		59	Cover		Universal straw walker

https://michelroger.be 143

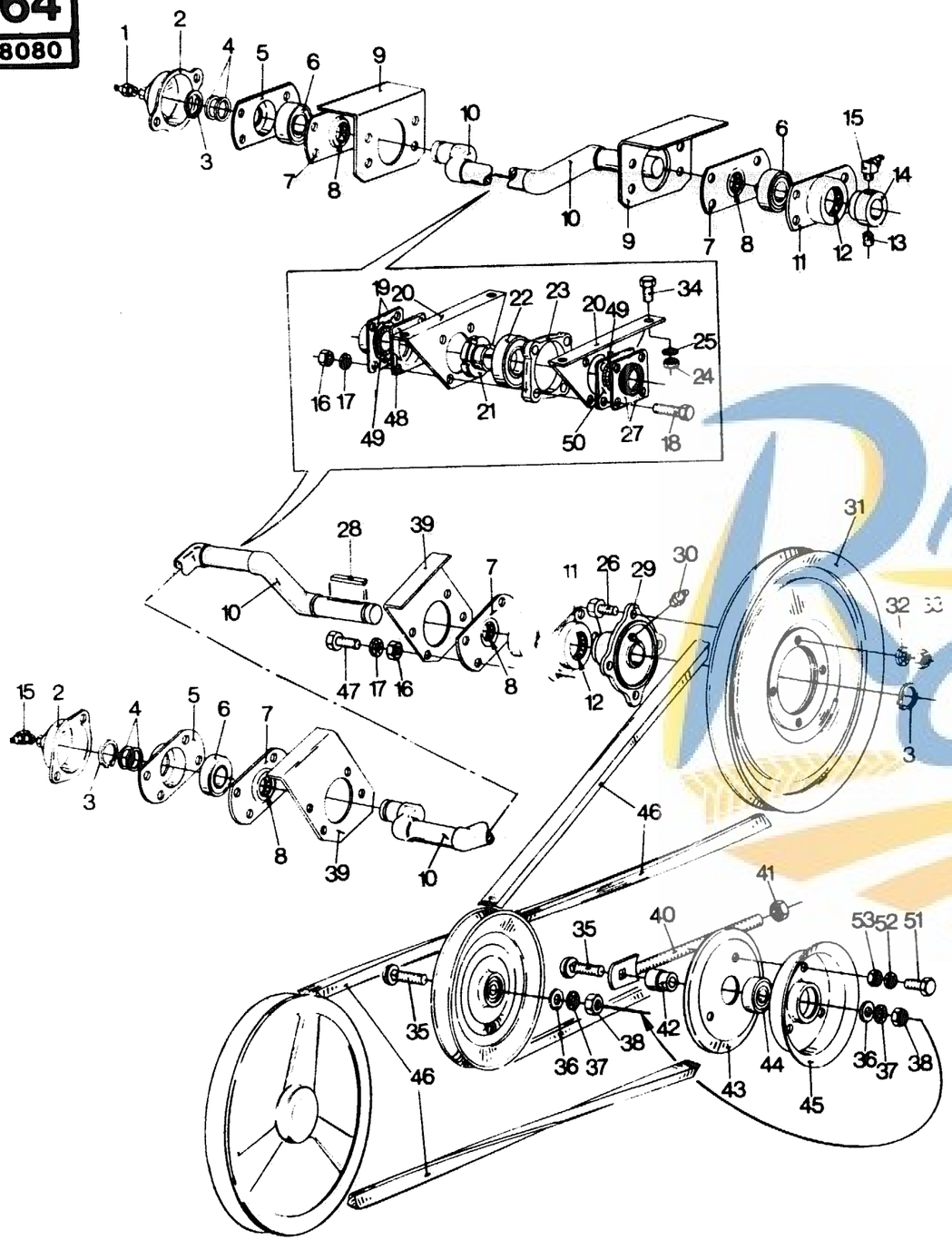

STRAW WALKER SHAFTS AND BEARINGS
ARBRE DE SECOUEURS ET PALIERS
STROHSCHÜTTLERWELLE UND LAGERUNG
ALBERO DEGLI SCUOTIPAGLIA — CUSCINETTI
SCHUDDERS EN LAGERING

MODEL 8070 - 8080

Fig.	Order Ref.	CD	8070	8080	Code	Description		N.B.
1	332038	6	1	1		Grease fitting		
2	310067	1	2	2		Cap	0.4	
3	370003	9	3	3		Circlip	0.7	
4	140108	3	AR	AR		Washer		
5	310046	7	2	2		Bearing housing		
6	210033	9	4	4		Bearing	1.0	11.5 (right-front)
7	310051	8	4	4		Bearing cover		Incl.fig.8
8	220061	0	4	4		Felt ring		
9	391001	0	2	2		Mounting plate		
10	387205	6		2		Straw walker shaft		
	391092	1	2			Straw walker shaft		
11	310049	3	2	2		Bearing cover	0.9	Incl.fig.12
12	220063	4	2	2		Felt ring	0.9	
13	300480	5	1	1		Set screw, socket head		
14	300014	8	1	1		Collar	0.4	
15	332040	1	2	2		Grease fitting		5.6 (rear) — 11.7 (front)
16	100015	8	64	64		Hex. nut		
17	322358	2	64	64		Tooth lockwasher		
18	120106	5	48	48		Hex. cap screw		
19	387368	0	20	24		Bearing cover		
20	421876	0	20	24		Mounting plate		
21	306740	3	10	12		Split bushing	5.5	11.9 (centre — front)
22	NSS		10	12		Bearing		
23	396079	8	10	12		Bearing housing		Incl.fig.22
24	100016	0	84	92		Hex. lock nut		
25	342172	2	50	58		Plain washer		
26	120110	4	44	52		Hex. cap screw		
27	396553	4	20	24		Bearing cover		
28	170010	2	1	1		Flat key	0.9	
29	387372	9	1	1		Flange		
30	321204	6	1	1		Grease fitting		
31	320866	7	1	1		Pulley	0.8	
32	140045	9	4	4		Tooth lockwasher		
33	100016	0	4	4		Hex. nut		
34	120245	9	20	20		Carriage bolt		
35	120046	7	2	2		Carriage bolt		
36	378246	1	2	2		Plain washer		
37	140048	5	2	2		Tooth lockwasher		
38	100020	9	2	2		Hex.nut		
39	387374	3	2	2		Sealing plate		
40	422568	8	1	1		Adjusting rod		
41	100038	6	1	1		Hex. lock nut		
42	200071	7	2	2		Bushing	1.0	

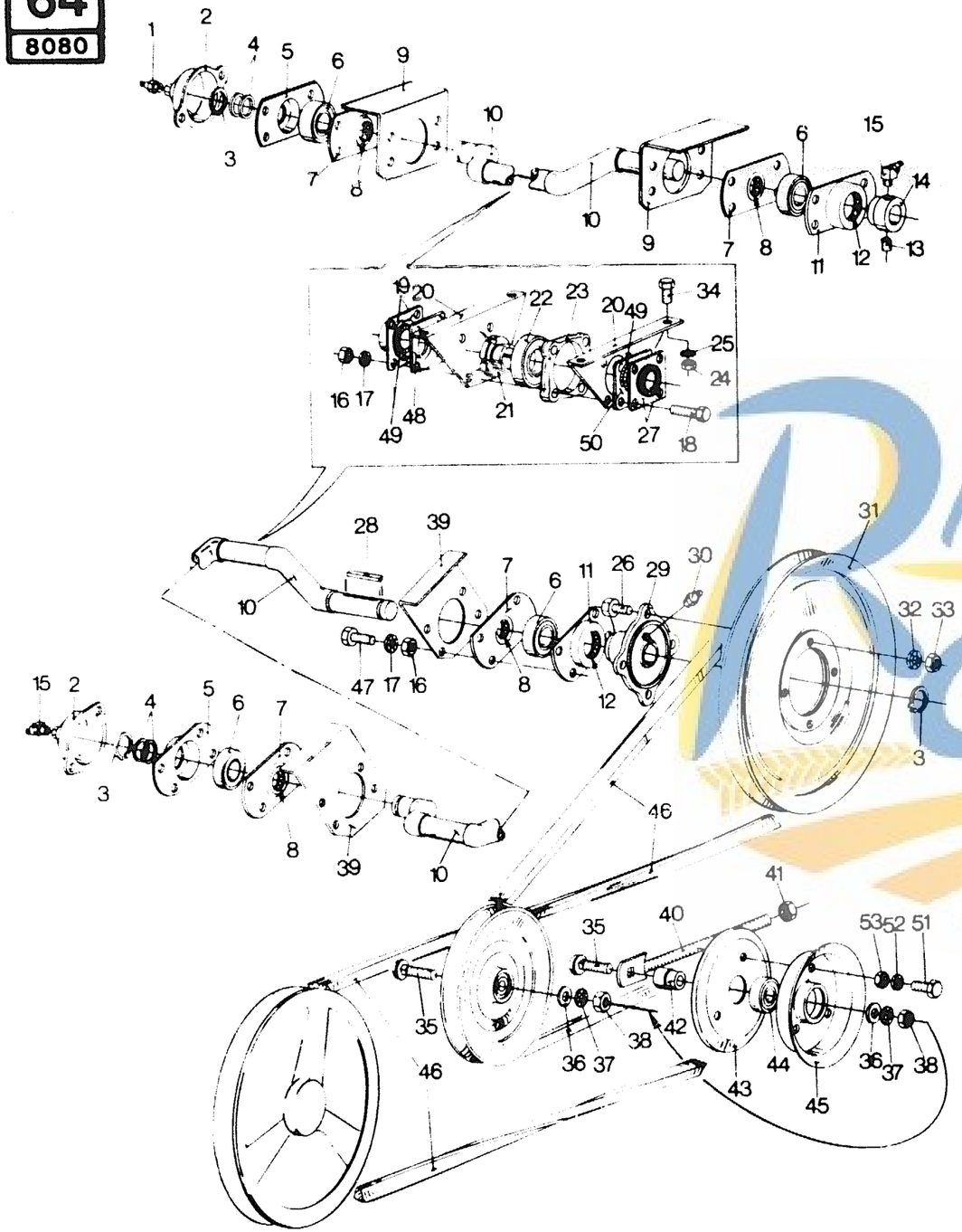

STRAW WALKER SHAFTS AND BEARINGS
ARBRE DE SECOUEURS ET PALIERS
STROHSCHÜTTLERWELLE UND LAGERUNG
ALBERO DEGLI SCUOTIPAGLIA — CUSCINETTI
SCHUDDERS EN LAGERING

MODEL 8070 - 8080

Fig.	Order Ref.	CD	8070	8080	Code	Description		N.B.
43	290119	7	4	4		Pulley half	0.9	
44	034439	5	1	1		Bearing	1.0	
45	290122	4	2	2		Idler half	0.9	
46	605529	7	1	1		"V" belt	0.9	
47	120104	1	16	16		Hex. cap screw		
48	310114	2	10	12		Bearing cover		
49	308450	0	20	24		Felt ring	5.5	(rear) — 11.9 (front)
50	310131	8	10	12		Bearing cover		
51	120100	3	18	18		Hex. cap screw		
52	322357	0	18	18		Tooth lockwasher		
53	100014	6	18	18		Hex. nut		

Michel ROGER

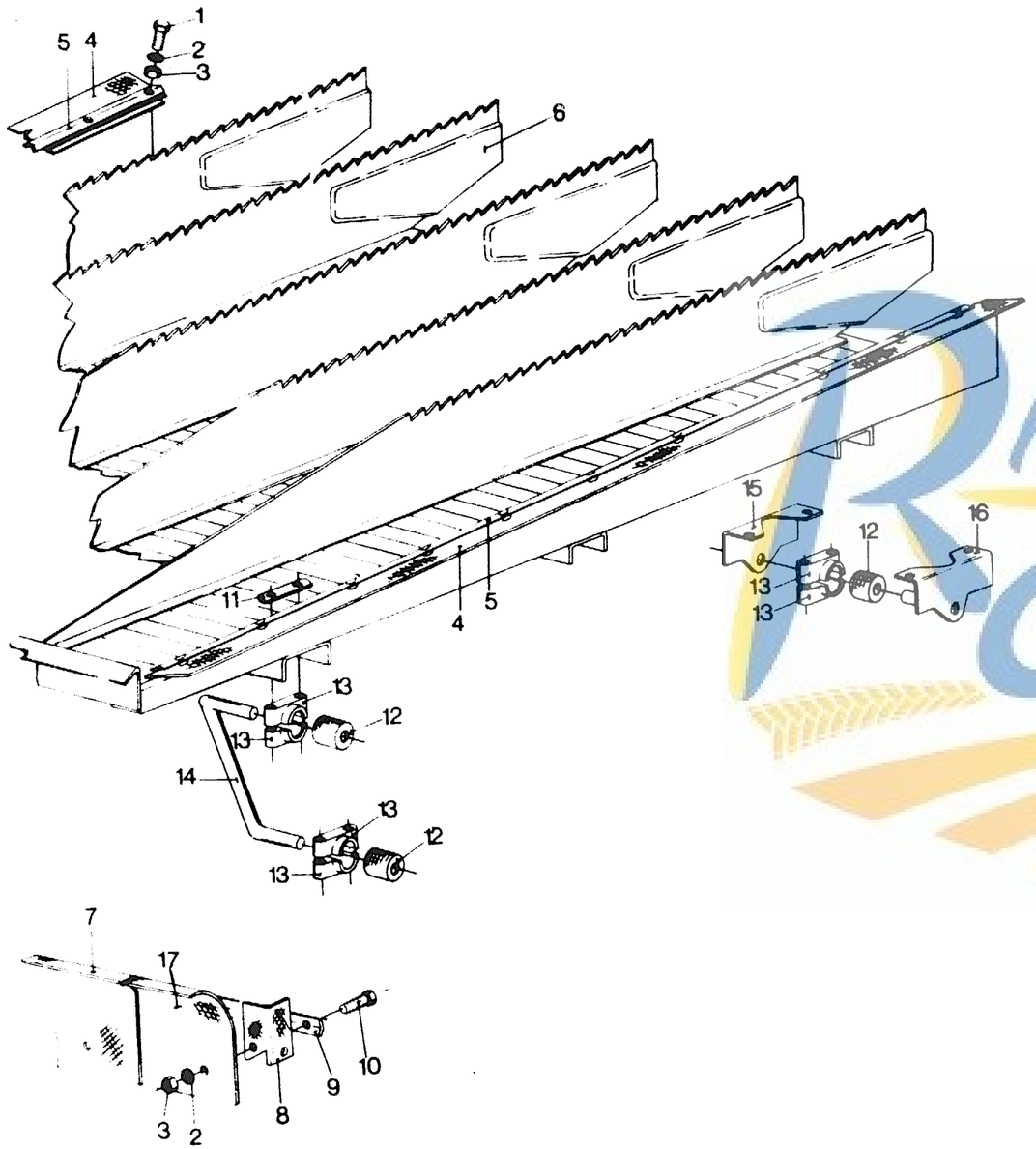

GRAIN PAN
CAISSON DE PREPARATION
SIEBKASTEN
TAVOLO DI RICUPERO
VOORBEREIDINGSBODEM

MODEL 8070 - 8080

Fig.	Order Ref.	CD	8070	8080	Code	Description	N.B.
1	120100	3	38	38		Hex. cap screw	
2	322357	0	76	76		Tooth lockwasher	
3	100014	6	63	63		Hex. nut	
4	388896	0	2	2		Sealing flap	
5	388895	8	2	2		Retaining strip	
6	388774	2		1		Shaker shoe	4.9
	394401	1	1			Shaker shoe	
7	431843	3		1		Sealing flap, RH	2.7
	431844	5	1			Sealing flap	
8	396483	5	2	2		Sealing flap	
9	388968	3		1		Retaining strip	
	399397	5	1			Retaining strip	
10	120099	8	27	27		Hex. cap screw	
11	333541	4	2	2		Backing plate	
12	398810	2	6	6		Rubber bushing	0.9
13	320033	2	12	12		Bearing	
14	388852	8	2	2		Suspension arm	2.1
15	394230	8	2	2		Bracket	
16	388863	1	2	2		Bracket	
17	431842	1	1	1		Sealing flap, LH	

MichelRoger

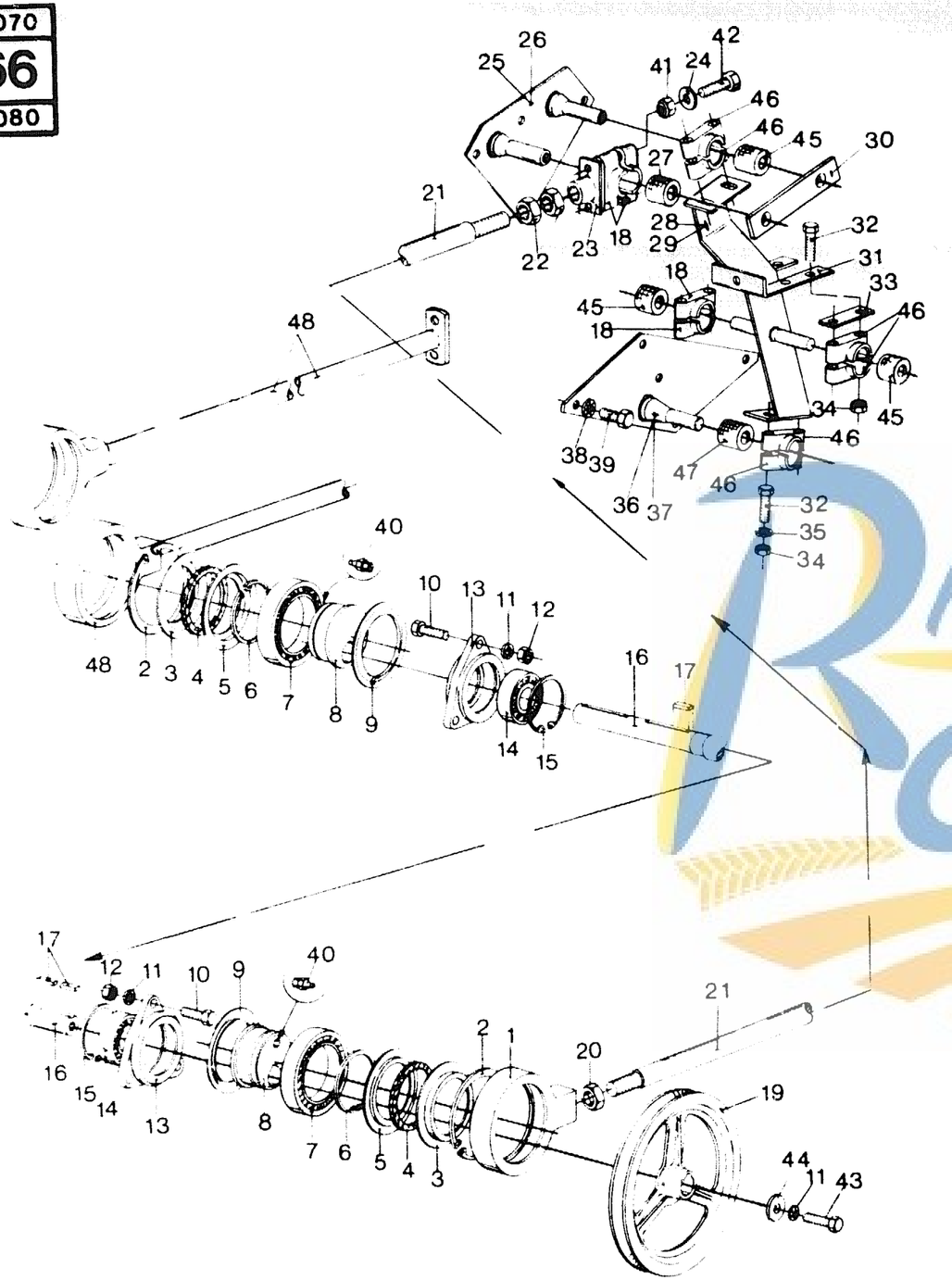

EXCENTRIC SHAFT GROUP
EXCENTRIQUE
EXZENTER
ALBERO ECCENTRICO
EXCENTRIEK

MODEL 8070 - 8080

Fig.	Order Ref.	CD	8070	8080	Code	Description	N.B.
1	387914 9		1	1		Bearing house	2.3
2	388294 4		2	2		Circlip	1.4
3	392106 3		2	2		Seal ring	1.5
4	410063 4		2	2		Felt ring	
5	392105 1		2	2		Seal ring	
6	370009 1		2	2		Circlip	1.6
7	210039 1		2	2		Bearing	2.3
8	387627 0		2	2		Eccentric	
9	388427 7		2	2		Ring	
10	120111 6		6	6		Hex. cap screw	
11	140045 9		6	6		Tooth lockwasher	
12	100016 0		6	6		Hex. nut	
13	387566 0		2	2		Bearing housing	3.3
14	320557 2		2	2		Bearing	
15	300633 0		2	2		Circlip	3.2
16	420411 5			1		Shaft	5.1
	394550 6		1			Shaft	
17	170008 7		3	3		Flat key	2.5
18	387449 2		8	8		Bearing half	0.8
19	387565 8		1	1		Pulley	
20	387644 6		1	1		Hex. jam nut	
21	388291 8		1	1		Connecting rod	2.9
22	100033 6		2	2		Hex.nut	
23	398971 2		1	1		Fixing flange	3.7
24	378244 7		2	2		Tooth lockwasher	
25	393505 0		1	1		Support , LH	4.7
26	393860 2		1	1		Support, RH	5.7
27	395394 5		2	2		Rubber bushing	1.5
28	388858 0		1	1		Pivot arm, LH	
29	388942 9		1	1		Pivot arm, RH	
30	388927 7		2	2		Connecting strip	0.7
31	391890 3		1	1		Plate	
32	120063 3		10	10		Hex. cap screw	
33	480247 8		1	1		Spacer, LH.	2.1
34	100067 7		20	20		Hex. lock nut	
35	378243 5		20	20		Plain washer	
36	388846 5		1	1		Support, LH	1.7
37	388845 3		1	1		Support, RH	
38	140160 3		8	8		Tooth lockwasher	
39	120161 1		4	4		Hex. cap screw	
40	321204 6		1	1		Grease fitting, LH	
	323713 7		1	1		Grease fitting, RH	
41	100037 4		4	4		Hex. lock nut	

GROUP
66

https://michelroger.be 147

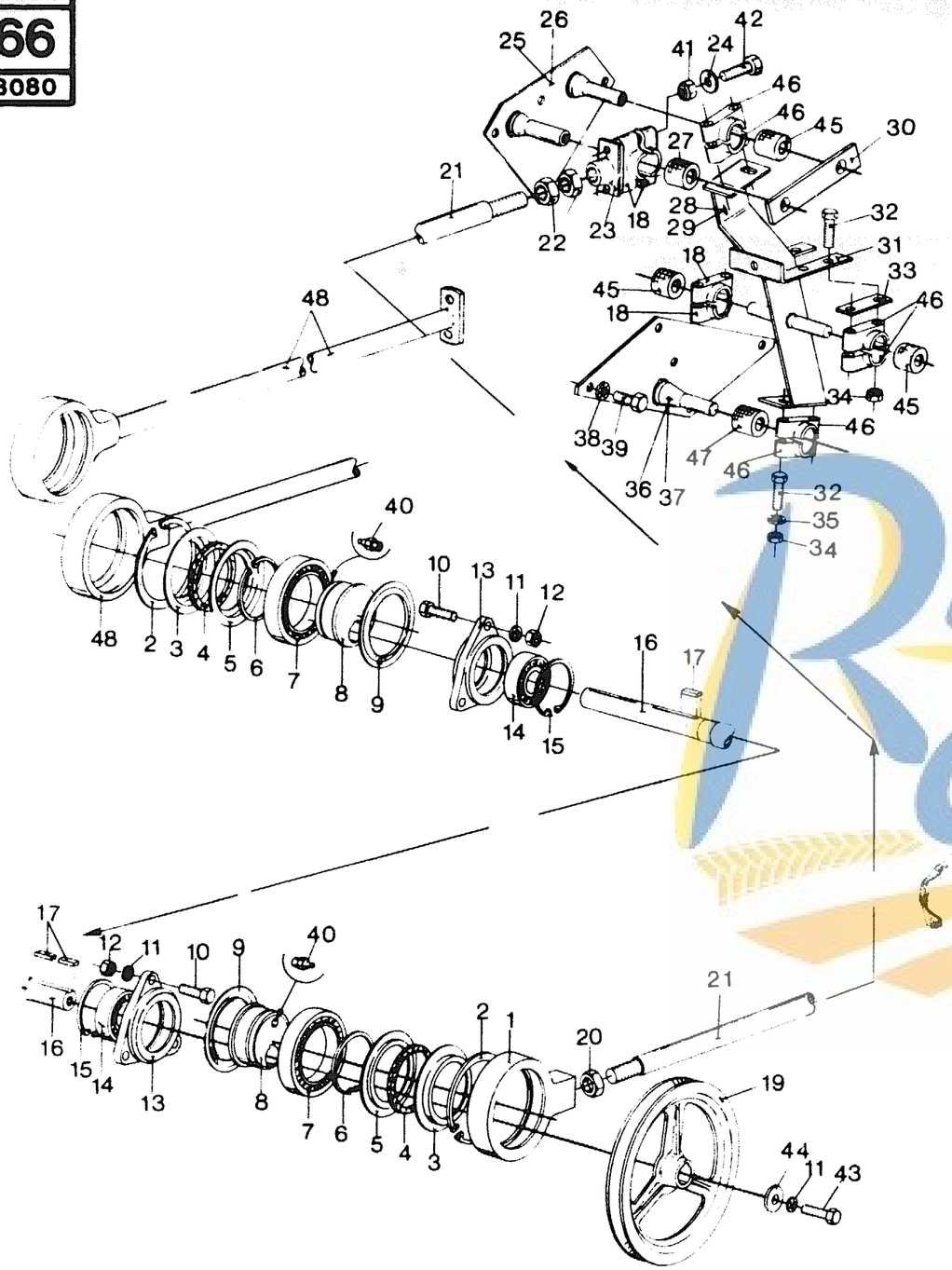

EXCENTRIC SHAFT GROUP
EXCENTRIQUE
EXZENTER
ALBERO ECCENTRICO
EXCENTRIEK

MODEL 8070 - 8080

Fig.	Order Ref.	CD	8070	8080	Code	Description	N.B.
42	120072	2	4	4		Hex. cap screw	
43	120110	4	4	4		Hex. cap screw	
44	140181	7	4	4		Washer	
45	398810	2	6	6		Bearing	
46	320033	2	12	12		Bearing	
47	398810	2	2	2		Rubber bushing	
48	397405	2	1	1		Connecting rod	2.5

Michel ROGER

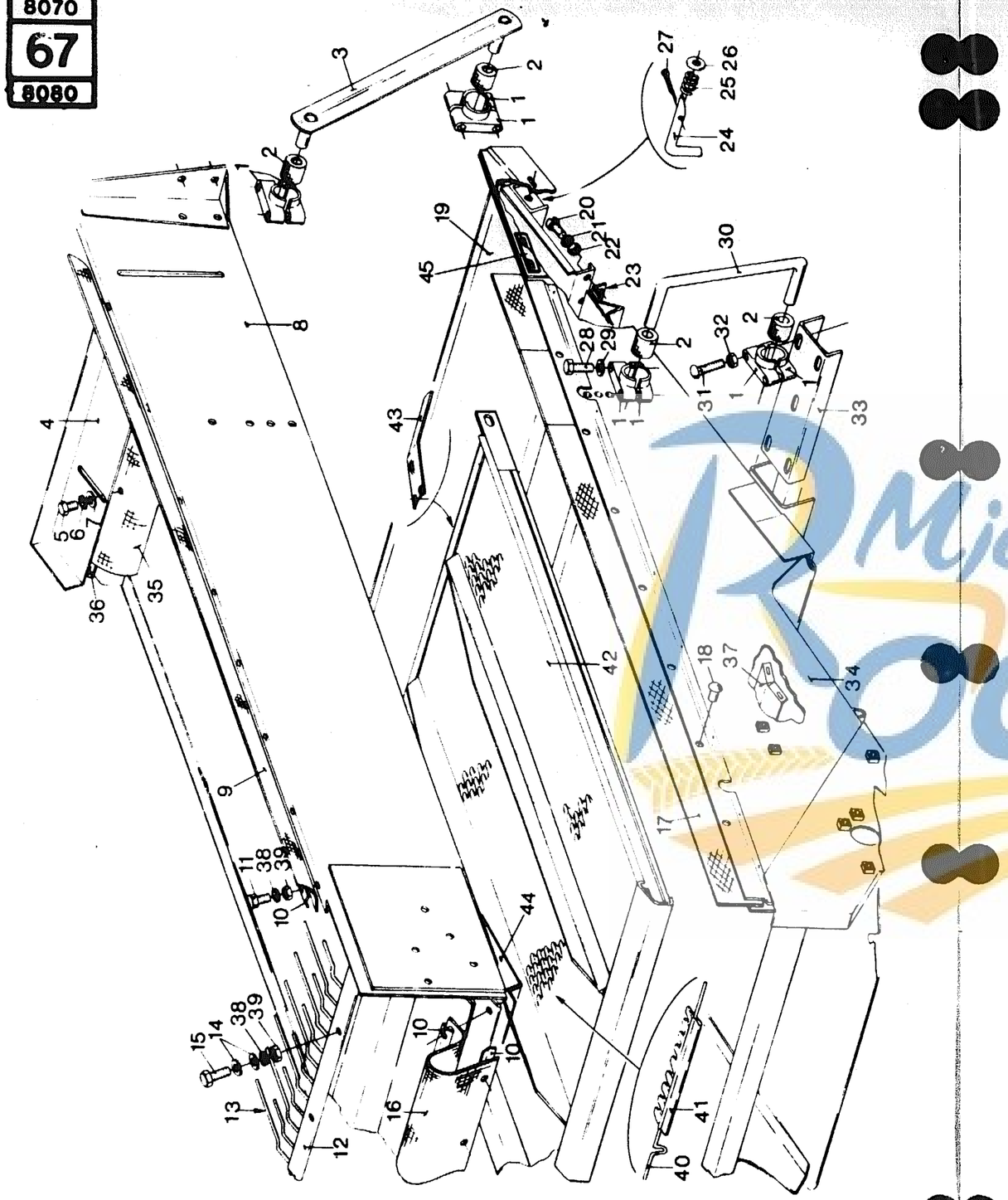

SHAKER SHOE
CAISSON DE NETTOYAGE
SIEBKASTEN
CASSONE DI PULIZIA
ZEEFKAST

MODEL 8070 - 8080

Fig.	Order Ref.	CD	8070	8080	Code	Description		N.B.
1	320033	2	16	16		Bearing		
2	398810	2	8	8		Rubber bushing	0.9	
3	388843	9	2	2		Suspension arm	1.5	
4	417345	9		2	611	Extension pan		
	394493	4	1		855	Extension pan		
5	120100	3	4	4		Hex. cap screw		
6	322357	0	4	4		Tooth lockwasher		
7	100014	6	4	4		Hex. nut		
8	391601	2		1		Shaker shoe, upper part	5.2	
	394417	4	1			Shaker shoe		
9	388848	9	2	2		Sealing flap		
10	388968	3	2	2		Retaining strip		
11	120100	3	38	38		Hex. cap screw		
12	388872	0		1		Rake assembly		Incl.fig.13
	394399	4	1			Rake assembly		
13	399827	8	23	23		Tine		
14	140015	6	20	20		Plain washer		
15	300506	1	2	2		Hex. cap screw		
16	388966	9		1		Sealing flap		
	394331	2	1			Sealing flap		
17	426073	3	2	2		Sealing flap		
18	335305	6	18	18		Rivet		
19	391671	9		1		Cover		
	394553	2	1	1		Cover		
20	321803	6	8	8		Screw		
21	322355	6	8	8		Tooth lockwasher		
22	100012	2	8	8		Hinge		
23	350083	3	4	4		Hinge		
24	394549	3	2	2		Locking handle		
25	180113	2	2	2		Spring		
26	140223	7	2	2		Plain washer		
27	130003	9	2	2		Cotter pin		
28	120062	1	6	6		Hex. cap screw		
29	140160	3	6	6		Tooth lockwasher		
30	388851	6	2	2		Suspension arm		
31	300660	7	4	4		Carriage bolt		
32	100067	7	4	4		Hex. lock nut		
33	393570	7	1	1		Support		
34	388752	6		1		Shaker shoe, lower part	16.0	Incl.fig.23
	394656	0	1			Shaker shoe		
35	417346	1		2	611	Sealing flap		
	398285	7	1		855	Sealing flap		

https://michelroger.be 149

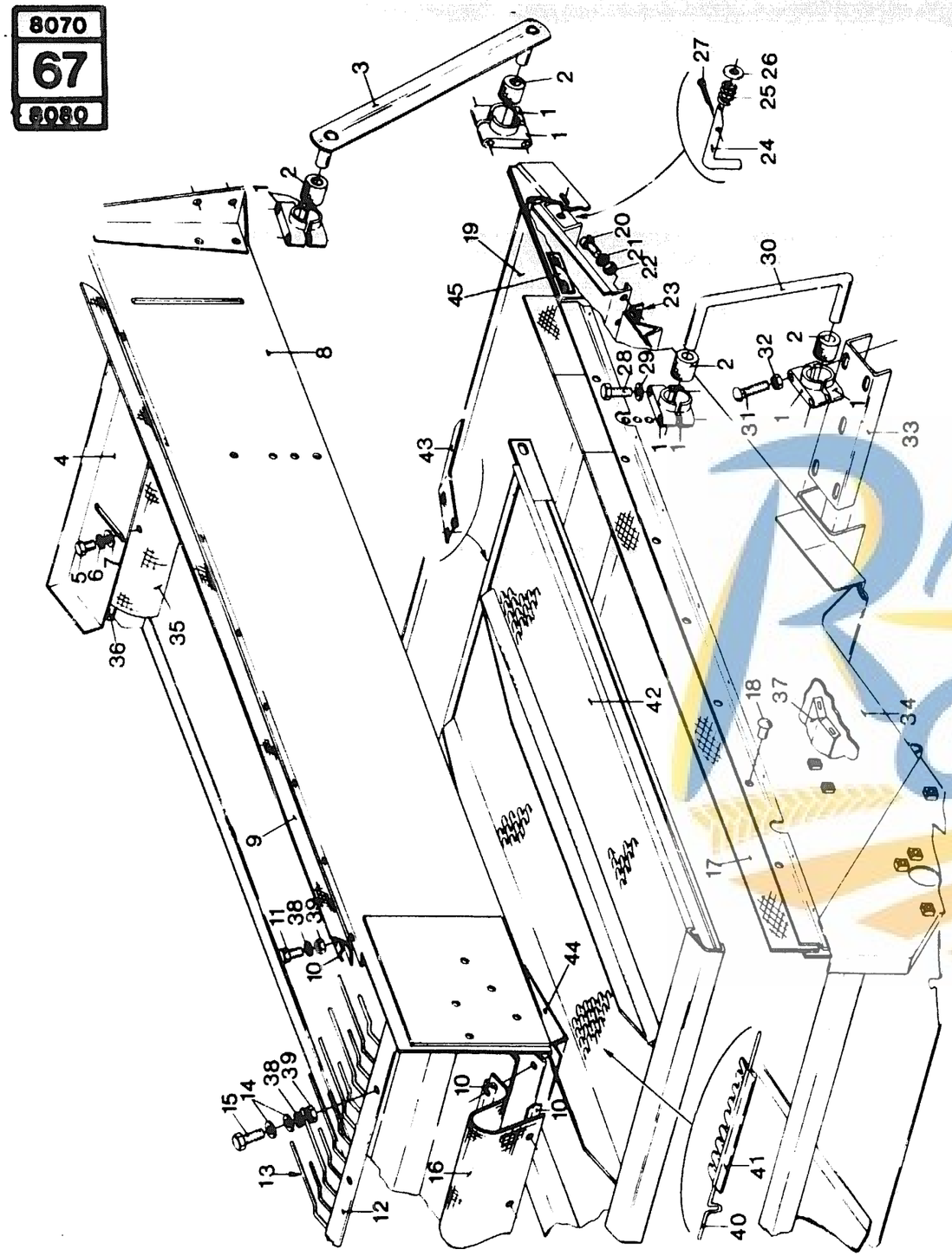

SHAKER SHOE
CAISSON DE NETTOYAGE
SIEBKASTEN
CASSONE DI PULIZIA
ZEEFKAST

MODEL 8070 - 8080

Fig.	Order Ref.	CD	8070	8080	Code	Description	N.B.
36	398258 0			2	611	Securing strip	
	394532 8		1		855	Securing strip	
37	388854 2			2		Deflector	
	394763 7		1			Deflector	
38	322357 0		AR	AR		Tooth lockwasher	
39	100014 6		AR	AR		Hex. nut	
40	388354 2		AR	AR		Wire	
41	481730 4		AR	AR		Sieve bar	"Clayson" 1' 1/8"
	402258 7			AR	609	Sieve bar	"Hart Carter" 13/16"
	402258 7		AR		854	Sieve bar	"Hart Carter" 13/16"
	748277 4			AR	52	Sieve bar	"Hart Carter" 13/16"
	748277 4		AR		66	Sieve bar	"Hart Carter" 13/16"
42	426999 5			2		Sieve assembly	"Clayson" 1' 1/8" — Incl.figs.40,41 and 43
	427001 3		1			Sieve assembly	"Clayson" 1' 1/8" — Incl.figs.40,41 and 43
	426366 4			2		Sieve assembly	Hart Carter 13/16" — incl.figs.40,41 and 43
	426371 5		1			Sieve assembly	Hart Carter 13/16" — Incl.figs.40,41 and 43
43	426761 2		1	1		Adjusting arm	
44	424143 0			1		Plate, RH	
	423757 0			1		Plate, LH	
	423756 8		1			Plate	
45	454401 4		1	1		Plate	

Michel ROGER

68 ➧ 72

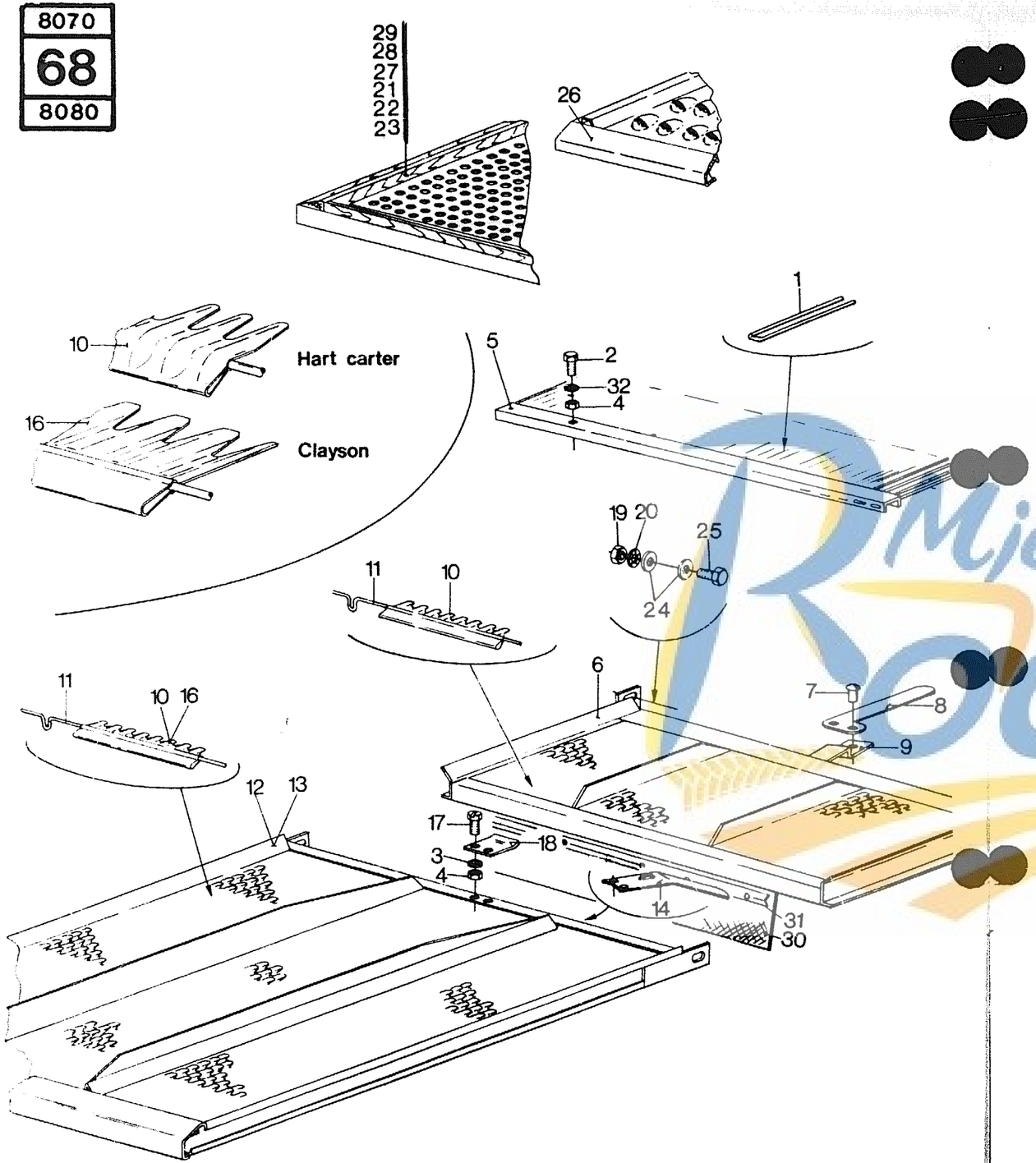

ADJUSTABLE SIEVE AND SPECIAL SIEVES
GRILLE REGLABLE ET GRILLES INTERCHANGEABLES
REGELBARES SIEB UND AUSWECHSELBARE SIEBE
CRIVELLO REGISTRABILE E CRIVELLI INTERCAMBIABILI
REGELBARE ZEEF EN WISSELZEVEN

MODEL 8070 - 8080

Fig.	Order Ref.	CD	8070	8080	Code	Description	N.B
1	335934 9		38	44		Tine	
2	120100 3		10	10		Hex. cap screw	
3	322357 0		14	14		Tooth lockwasher	
4	100014 6		14	14		Hex. nut	
5	388369 3			2		Tine fixing	
	394862 7		1			Tine fixing	
6	388367 9			2		Adjustable sieve	Incl.figs.7,8,9,10 and 11
	394894 4		1			Adjustable sieve	
7	130027 9		4	4		Rivet	
8	335935 1		2	2		Adjusting arm	
9	395566 0		2	2		Arm	
10	324715 2		AR	AR		Sieve bar	"Hart-Carter" 1' 1/8"
	396505 3		AR	AR		Sieve bar	"Hart-Carter" 1' 5/8"
11	388354 2			AR		Sieve wire	
	394836 2		AR			Sieve wire	
12	426999 5			2		Sieve assembly	0.8 Incl.figs.11,14,15,16 — With "Clayson" sieve bar 1' 1/8"
	427001 3		1				0.8 Incl.figs.11,14,15,16 — With "Clayson" sieve bar 1' 1/8"
13	427002 5			2		Sieve assembly	0.8 Incl.figs.11,14,15,16 — With "Hart-Carter" sieve bar 1' 1/8"
	427000 1		1			Sieve assembly	0.8 Incl.figs.11,14,15,16 — With "Hart-Carter" sieve bar 1' 1/8"
	426998 3			2		Sieve assembly	0.8 Incl.figs.11,14,15,16 — With "Hart-Carter" sieve bar 1' 5/8"
	426995 7		1			Sieve assembly	0.8 Incl.figs.11,14,15,16 — With "Hart-Carter" sieve bar 1' 5/8"
14	426761 2		2	2		Adjusting arm	
16	481730 4			AR		Sieve bar	„Clayson" 1' 1/8"
17	120013 8		4	4		Screw	
18	334237 0		2	2		Spring	0.8
19	100016 0		10	10		Hex. nut	
20	140045 9		10	10		Tooth lockwasher	
21	396755 2			2		Sieve assembly	Ø 6 mm holes — Accessory
	397886 0		1			Sieve assembly	Ø 6 mm holes — Accessory
22	396756 4			2		Sieve assembly	Ø 9 mm holes — Accessory
	397887 2		1			Sieve assembly	Ø 9 mm holes — Accessory
23	396753 8			2		Sieve assembly	Ø 12 mm holes — Accessory
	397888 4		1			Sieve assembly	Ø 12 mm holes — Accessory
24	378244 7		10	10		Plain washer	
25	120041 7		10	10		Carriage bolt	
26	397039 5			2		Graepel sieve	
	399115 9		1			Graepel sieve	

GROUP
68

https://michelroger.be

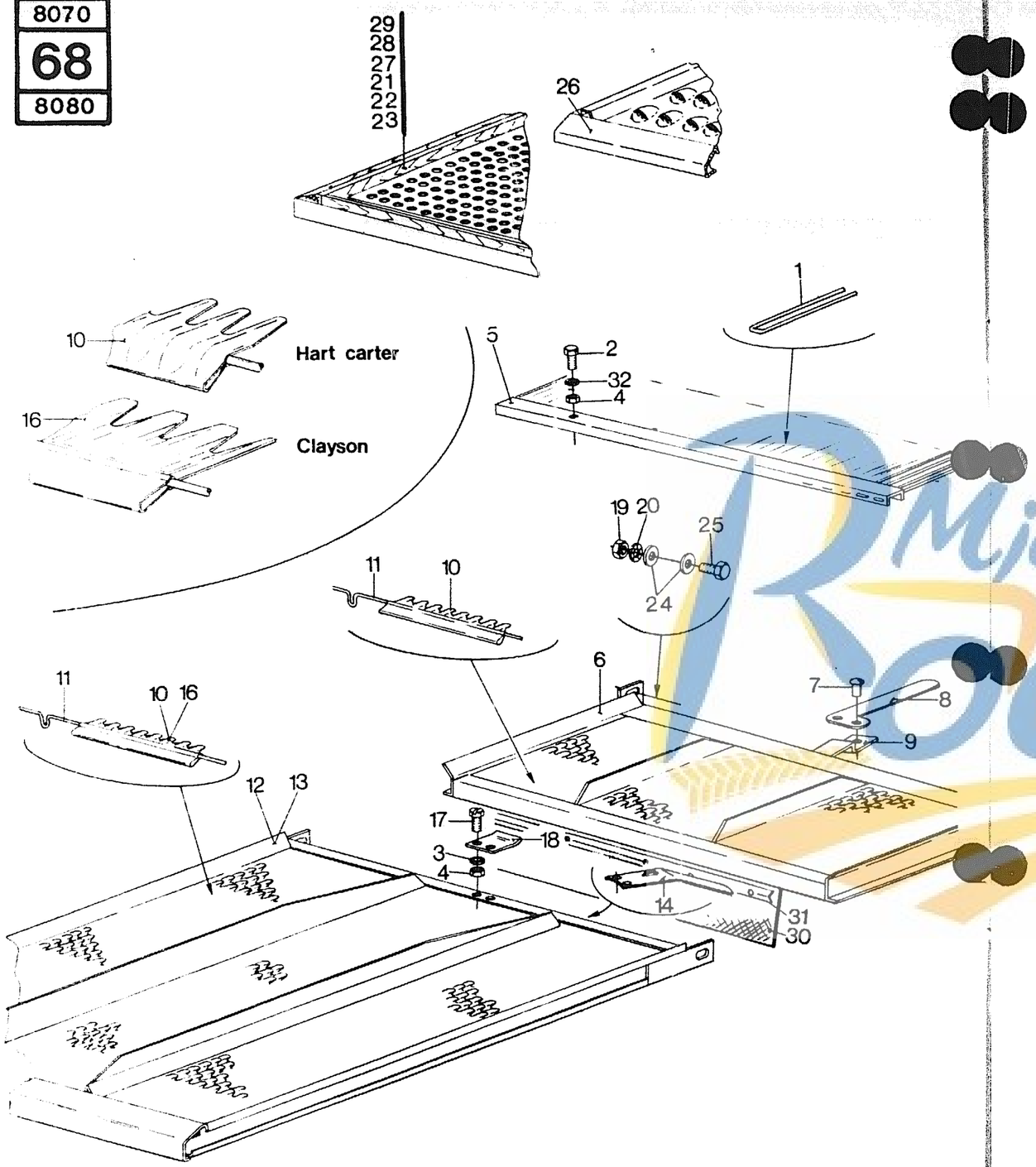

ADJUSTABLE SIEVE AND SPECIAL SIEVES
GRILLE REGLABLE ET GRILLES INTERCHANGEABLES
REGELBARES SIEB UND AUSWECHSELBARE SIEBE
CRIVELLO REGISTRABILE E CRIVELLI INTERCAMBIABILI
REGELBARE ZEEF EN WISSELZEVEN

MODEL 8070 - 8080

Fig.	Order Ref.	CD	8070	8080	Code	Description	N.B
27	395156 1		1			Sieve assembly	Ø 14 mm holes — Accessory
	390369 7			2		Sieve assembly	Ø 14 mm holes — Accessory
28	395158 5		1			Sieve assembly	Ø 16 mm holes — Accessory
	390370 0			2		Sieve assembly	Ø 16 mm holes — Accessory
29	395160 0		1			Sieve assembly	Ø 18 mm holes — Accessory
	390371 2			2		Sieve assembly	Ø 18 mm holes — Accessory
30	740589 7		1		71	Sealing flap	
	740647 1			1	56	Sealing flap	
31	740590 0		5		71	Fixing lath	
	740686 3			6	56	Fixing lath	
32	**412653 7**		8	8		Lockwasher	

Michel ROGER

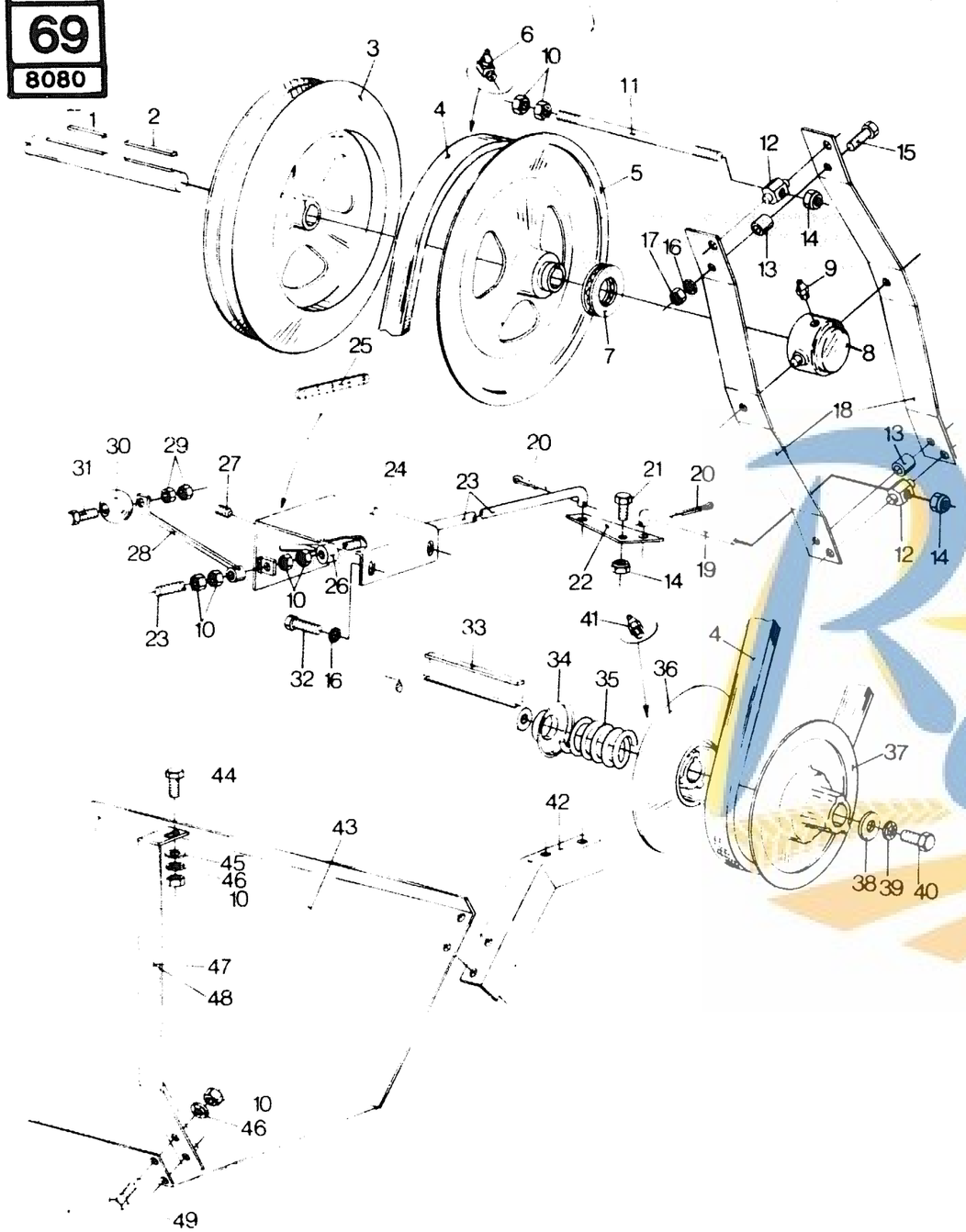

FAN VARI-DRIVE AND BOTTOM PLATE
VARIATEUR DU VENTILATEUR ET TOLE DE FOND
GEBLÄSE - REGELTRIEB UND BODENBLECH
VARIATORE DI VELOCITA DEL VENTILATORE E LAMIERA DI FONDO
WINDMOLENVARIATOR EN BODEMPLAAT

MODEL 8070 - 8080

Fig.	Order Ref.	CD	8070	8080	Code	Description	N.B
1	170011 4		1	1		Flat key	
2	170035 4		1	1		Flat key	1.0
3	388296 8		1	1		Variator disc, inner	1.3
4	388280 5		1	1		"V" belt	1.0
5	388295 6		1	1		Variator disc, outer	0.7
6	323713 7		1	1		Grease fitting	
7	210054 3		1	1		Thrust bearing	0.5
8	321069 8		1	1		Bearing housing	0.7
9	323787 2		1	1		Grease fitting	
10	100016 0		6	6		Hex. nut	
11	436582 4		1	1		Threaded rod	
12	388425 3			2		Adjusting block	
	388425 3		2			Adjusting block	
13	334056 6		2	2		Bushing	
14	412141 2		3	3		Hex. lock nut	
15	120107 7		2	2		Hex. cap screw	
16	322358 2		4	4		Tooth lockwasher	
17	100015 8		2	2		Hex. nut	
18	388960 7		2	2		Thrust arm	
19	394999 6			1		Adjusting rod	
	394967 9		1			Adjusting rod	
20	130003 9		2	2		Cotter pin	
21	120109 1		1	1		Hex. cap screw	
22	394968 1		1	1		Hinge plate	
23	394970 6		1	1		Adjusting rod	
24	426022 6		1	1		Guard	
25	321507 8		1	1		Indicator plate	
26	354730 0		1	1		Set ring	
27	300483 1		1	1		Set screw, cup point	
28	394973 2		1	1		Crank	
29	100014 6		2	2		Hex. nut	
30	330022 1		1	1		Crank ball	
31	338413 8		1	1		Hex. cap screw	
32	120103 9		2	2		Hex. cap screw	
33	395518 9		1	1		Flat key	1.0
34	394345 1		1	1		Spring holder	0.9
35	334054 2		1	1		Spring	
36	396415 2		1	1		Variator disc, inner	0.9
37	388255 2		1	1		Variator disc, outer	0.8
38	327084 6		1	1		Plain washer	

https://michelroger.be 154

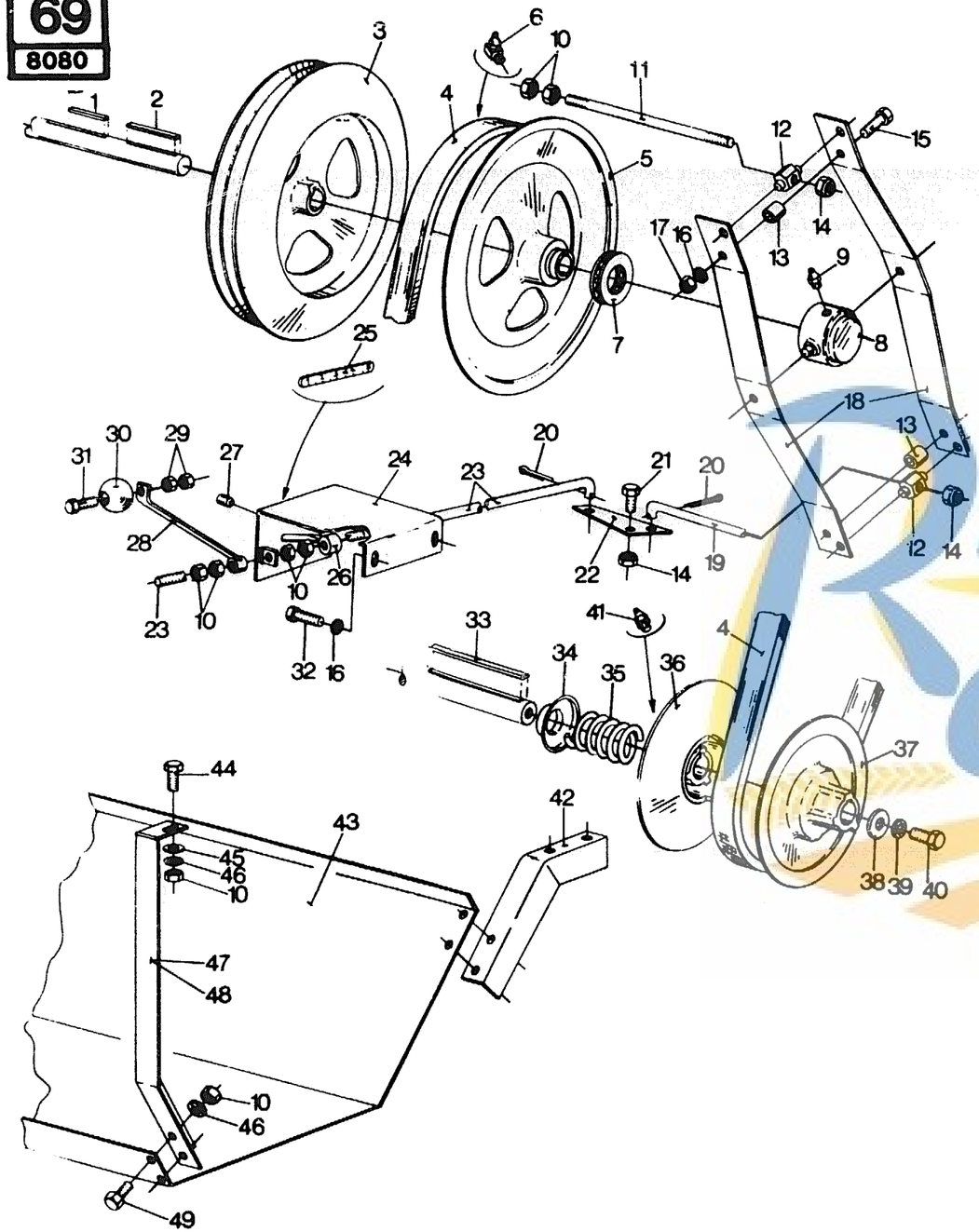

FAN VARI-DRIVE AND BOTTOM PLATE
VARIATEUR DU VENTILATEUR ET TOLE DE FOND
GEBLÄSE — REGELTRIEB UND BODENBLECH
VARIATORE DI VELOCITA DEL VENTILATORE E LAMIERA DI FONDO
WINDMOLENVARIATOR EN BODEMPLAAT

MODEL 8070 - 8080

Fig.	Order Ref.	CD	8070	8080	Code	Description	N.B.
39	140046	1	1	1		Tooth lockwasher	
40	300389	1	1	1		Hex. cap screw	
41	321204	6	1	1		Grease fitting	
42	417702	7		2		Bracket	
	395202	0	2			Bracket	
43	417701	5		1		Guard	
	395213	3	1			Guard	
44	120120	5	6	6		Hex. cap screw	
45	378244	7	4	4		Plain washer	
46	140045	9	16	16		Tooth lockwasher	
47	420514	3	1	1		Bracket, LH	
48	420515	5	1	1		Bracket, RH	
49	300388	9	10	10		Hex. cap screw	

Michel ROGER

https://michelroger.be 155

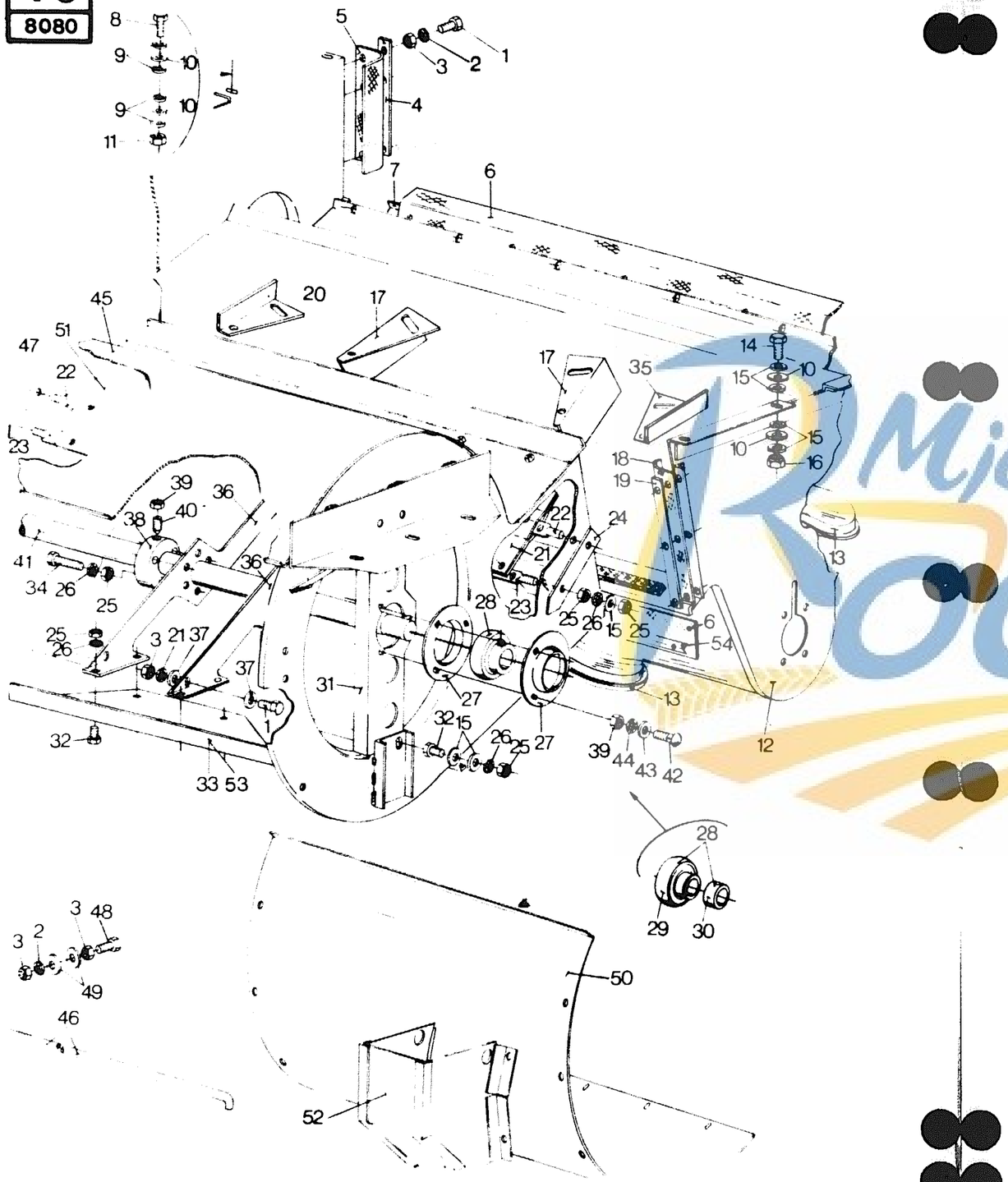

248

FAN CASING
ENVELOPPE DU VENTILATEUR
GEBLÄSEVERKLEIDUNG
CASSONE DEL VENTILATORE
WINDMOLENKAST

MODEL 8070 - 8080

Fig.	Order Ref.	CD	8070	8080	Code	Description	N.B
1	120099 8		89	89		Hex. cap screw	
2	322357 0		95	95		Tooth lockwasher	
3	100014 6		101	101		Hex. nut	
4	388333 8		2		858	Plate	
	9501680 0		2		73	Plate	
	388333 8			2	619	Plate	
	9501680 0			2	58	Plate	
5	388332 6		2	2		Sealing flap	
6	388334 0			2		Sealing flap	
	394506 3		2			Sealing flap	
7	390374 8			1		Securing strip	
	399397 5		1			Securing strip	
8	120055 6		8	8		Hex. cap screw	
9	140040 9		50	50		Plain washer	
10	358817 8		24	24		Plain washer	
11	353308 4		16	16		Hex. lock nut	
12	383473 1		1			Fan casing	9.3
	388399 6			1		Fan casing	9.3
13	333380 2		2	2		Cover	0.8
14	120106 5		4	4		Hex. cap screw	
15	378243 5		42	50		Plain washer	
16	100067 7		4	4		Hex. lock nut	
17	331713 7		2			Wind guide, upper	
	398240 3			4		Wind guide, upper	
18	388331 4		2	2		Sealing flap	
19	388330 2		2	2		Retaining strip	
20	331712 5		2	4		Wind guide, lower, RH	
21	393507 4		1			Wind deflector, lower	
	388182 7			1		Wind deflector, lower	
22	482006 0		4	4		Support	
23	340039 8		4	4		Support	
24	333383 8		4	4		Indicator	
25	100015 8		65	96		Hex. nut	
26	322358 2		88	88		Tooth lockwasher	
27	036403 2		4	4		Bearing flange	
28	212606 6		2	2		Bearing assembly	1.6 Incl.figs.29 and 30
29	212607 8		2	2		Bearing	
30	212608 0		2	2		Locking collar	1.3
31	388178 8		2	2		Support	
32	120103 9		40	68		Hex. cap screw	
33	394507 5		6			Fan blade, RH	1.9
	388176 4			6		Fan blade, RH	1.9

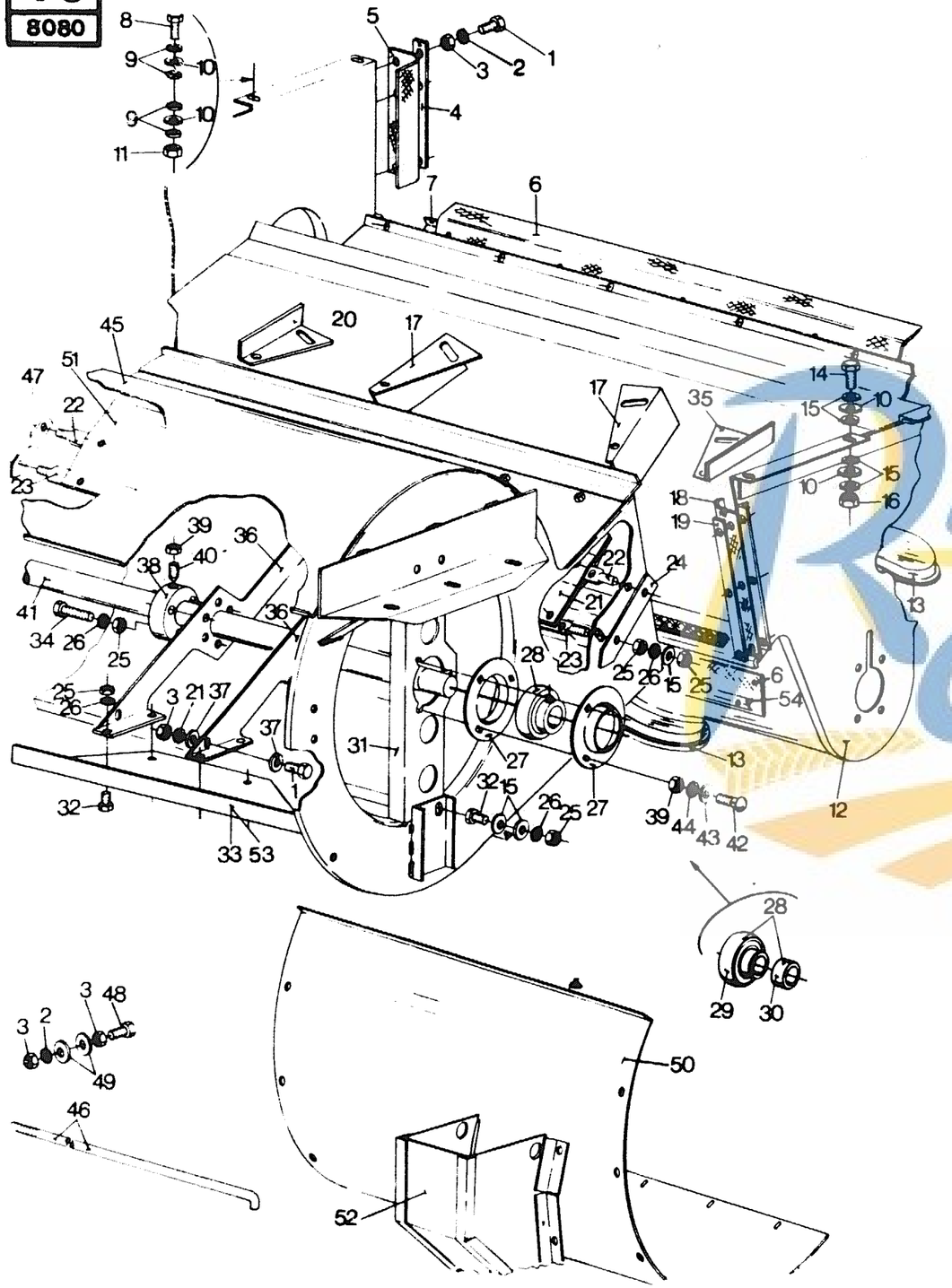

250

FAN CASING
ENVELOPPE DU VENTILATEUR
GEBLÄSEVERKLEIDUNG
CASSONE DEL VENTILATORE
WINDMOLENKAST

MODEL 8070 - 8080

Fig.	Order Ref.	CD	8070	8080	Code	Description	N.B
34	120107 7		6	6		Hex. cap screw	
35	331713 7			3		Wind guide, lower	
36	393759 7		9	12		Blade support	6.6
37	140015 6		46	46		Plain washer	
38	393760 0			4		Hub	7.0
	393985 6		4			Hub	
39	100016 0		10	10		Hex. jam nut	
40	391136 5		4	4		Set screw, cone point	
41	388494 8			1		Shaft	3.6
	394514 0		1			Shaft	
42	120041 7		6	6		Carriage bolt	
43	378244 7		6	6		Plain washer	
44	140045 9		6	6		Tooth lockwasher	
45	388191 6			1		Fan casing	7.8
	393424 8		1			Fan casing	
46	394999 6			1		Adjusting rod	
	394967 9		1			Adjusting rod	
47	484811 9		2	2		Indicator	
48	120100 3		14	14		Hex. cap screw	
49	362776 6		20	20		Plain washer	
50	388179 0			1		Fan guard	1.7
	393423 6		1			Fan guard	
51	420223 6			1		Deflector, upper	
	420225 0		1			Deflector, upper	
52	417696 2			1		Guard	0.7
53	438097 7			6		Fan blade, LH	
54	388968 3			1		Retaining strip	
	394532 8		1	1		Retaining strip	

https://michelroger.be 157

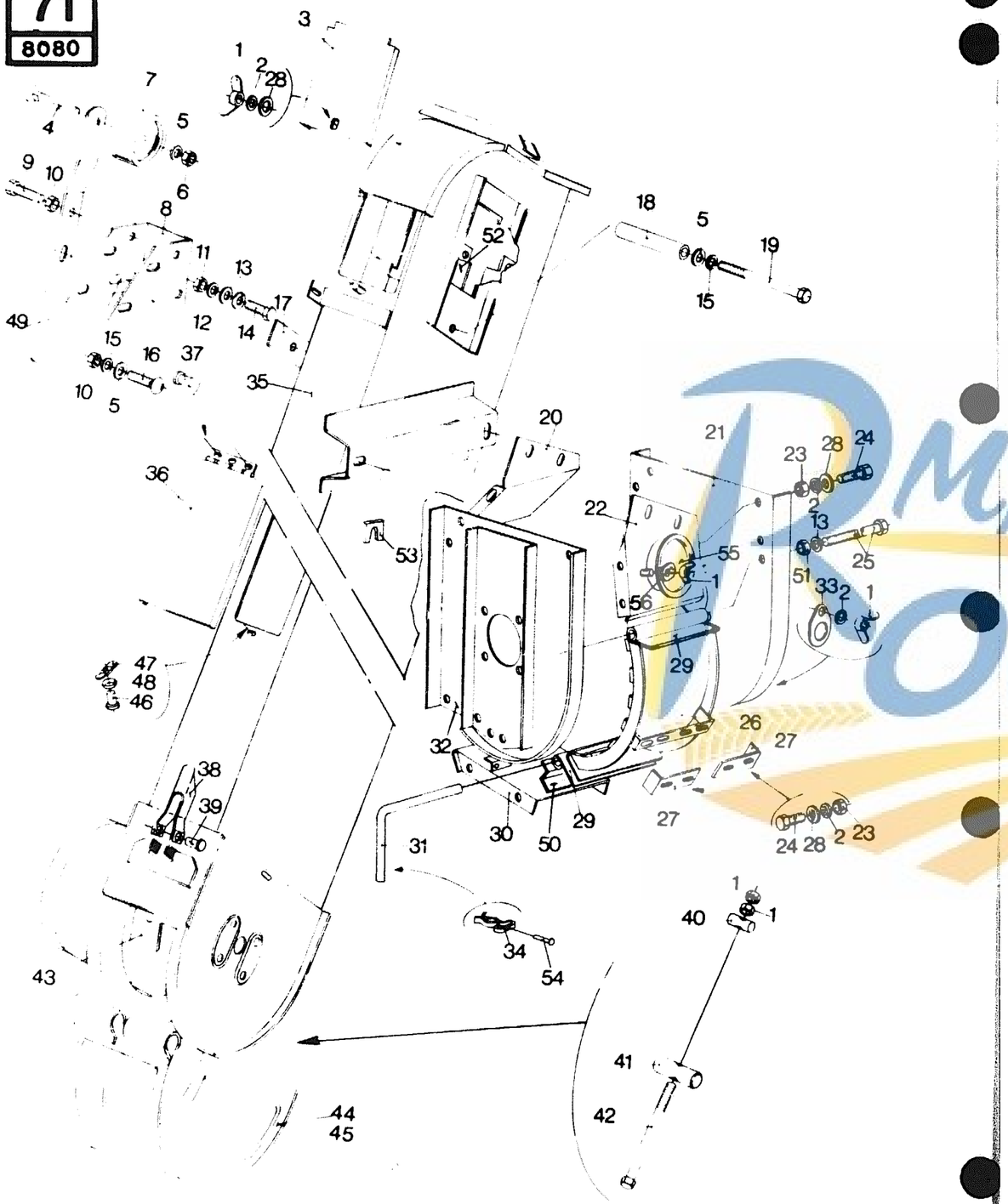

TAILINGS ELEVATOR
ELEVATEUR D'OTONS
ÜBERKEHR ELEVATOR
ELEVATORE DEL RICUPERO
TERUGVOERELEVATOR

MODEL 8070 - 8080

Fig.	Order Ref.	CD	8070	8080	Code	Description	N.B
1	100004 5		2	2		Wing nut	
2	322357 0		7	7		Tooth lockwasher	
3	388537 0		1	1		Cover	
4	334682 3		1	1		Carriage bolt	
5	378245 9		1	1		Plain washer	
6	100038 6		1	1		Hex. lock nut	
7	334970 4		1	1		Chain idler	
8	388459 4		1	1		Support	
9	120120 5		1	1		Hex. cap screw	
10	337475 7		1	1		Hex.nut	
11	100015 8		10	10		Hex.nut	
12	322358 2		10	10		Tooth lockwasher	
13	378243 5		2	2		Plain washer	
14	120104 1		4	4		Hex. cap screw	
15	140046 1		4	4		Tooth lockwasher	
16	120044 3		1	1		Carriage bolt	
17	397447 0		1	1		Locking plate	
18	388563 5		1	1		Bushing	
19	397393 5		1	1		Hex. cap screw	
20	388541 9		1	1		Plate	
21	422424 4		1	1		Side plate	1.0
22	419547 9		1	1		Plate	
23	100014 6		10	10		Hex. nut	
24	120099 8		10	10		Hex. cap screw	
25	396420 3		1	1		Hex. cap screw	
26	421897 4		1	1		Concave w/a	0.4 With teeth
	388519 2		1	1		Concave w/a	Smooth
27	388536 8		2	2		Bracket	
28	140015 6		4	4		Plain washer	
29	393812 1		2	2		Adjusting plate	
30	388539 4		1	1		Bottom plate	
31	388538 2		1	1		Locking pin	
32	388528 1		1	1		Side plate	
33	321662 6		1	1		Cover	
34	323307 6		1	1		Spring clip	
35	388460 7		1	1		Tailings elevat. casing	11.1 Incl.figs.38 and 39
36	321744 0		1	1		Inspection door	0.5
37	325911 9		2	2		Rivet	
38	488940 6		1	1		Locking handle	
39	130070 0		2	2		Rivet	
40	260190 1		1	1		Hinge clamp	
41	260023 8		1	1		Hinge clamp	

https://michelroger.be 158

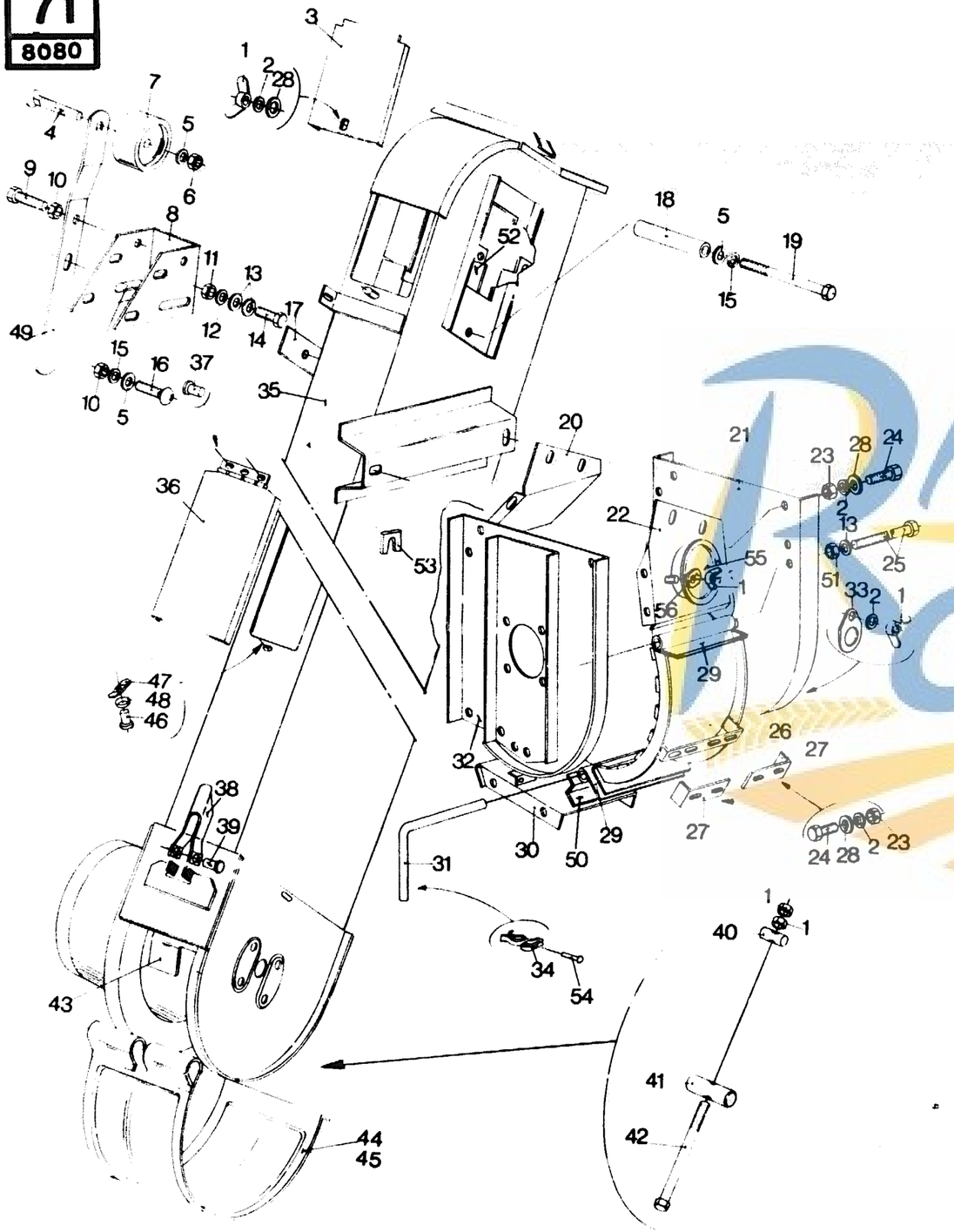

TAILINGS ELEVATOR
ELEVATEUR D'OTONS
ÜBERKEHR ELEVATOR
ELEVATORE DEL RICUPERO
TERUGVOERELEVATOR

MODEL 8070 - 8080

Fig.	Order Ref.	CD	8070	8080	Code	Description	N.B.
42	328873	0	1	1		Hex. cap screw	
43	425698	6	1	1		Scraper	
44	333423	4	1	1		Cover	0.4 Smooth
45	350737	0	1	1		Cover	0.4 Perforated
46	368445	1	1	1		Rivet	
47	362786	7	1	1		Turnbuckle	0.4
48	362785	5	1	1		Cup washer	
49	392290	2	1	1		Idler arm	
50	410071	1	1	1		Plate	
51	100067	7	1	1		Hex. lock nut	
52	399329	2	1	1		Plate	
53	362841	5	AR	AR		Shim	
54	325911	9	1	1		Rivet	
55	419548	1	1	1		Cover	
56	419717	0	2	2		Clamp	

https://michelroger.be

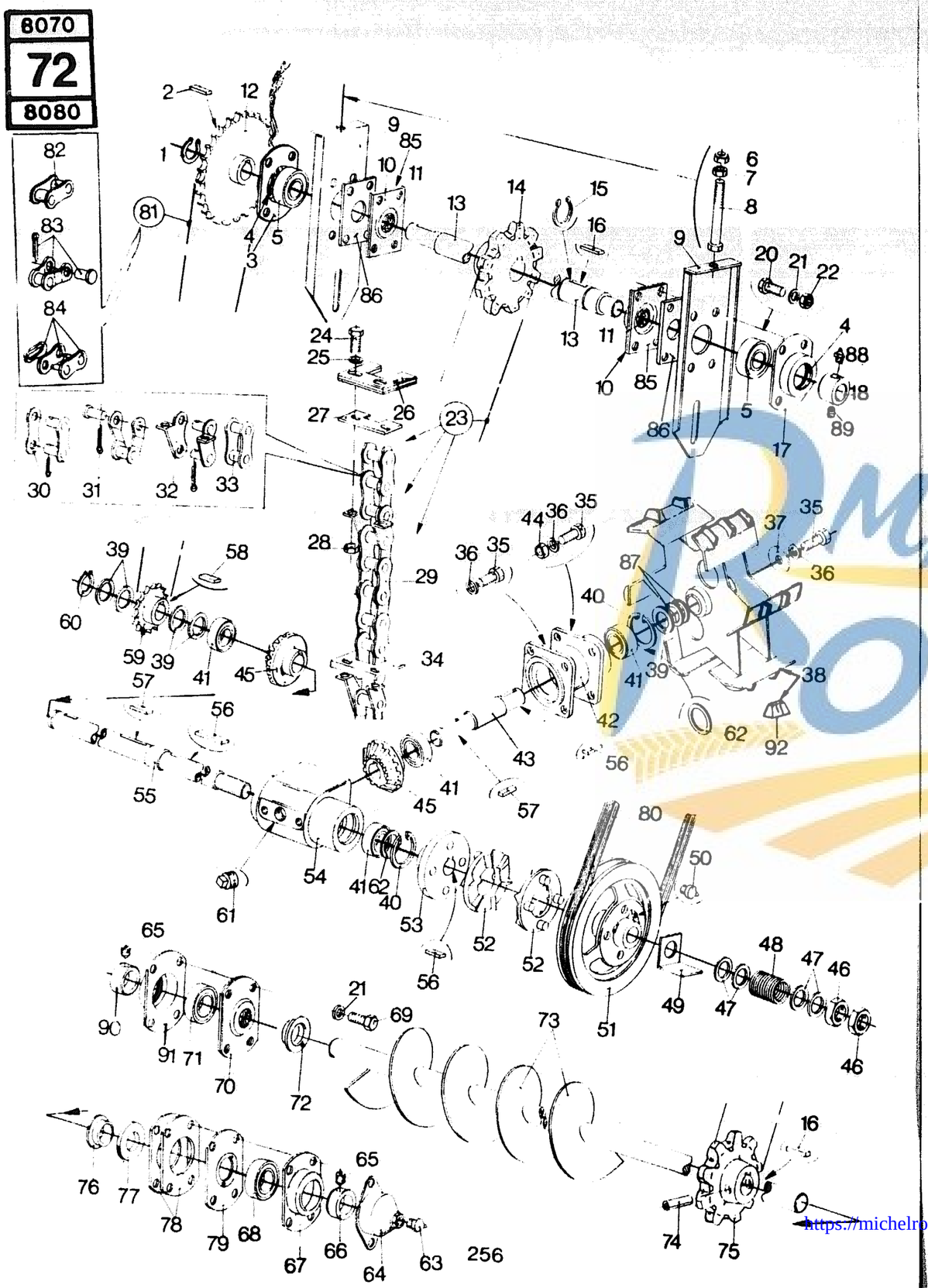

TAILINGS ELEVATOR DRIVE GROUP
COMMANDE D'ELEVATEUR D'OTONS
GETRIEBE FÜR ÜBERKEHR ELEVATOR
COMANDO DELL'ELEVATORE DEL RICUPERO
AANDRIJVING TERUGVOERELEVATOR

MODEL 8070 - 8080

Fig.	Order Ref.	CD	8070	8080	Code	Description		N.B
1	370002	7	1	1		Circlip		
2	170030	4	1	1		Flat key	0.8	
3	310048	1	1	1		Cover	0.9	Incl.fig.4
4	220011	5	1	1		Seal ring		
5	210032	7	2	2		Ball bearing	1.0	
6	100038	6	2	2		Hex. lock nut		
7	337475	7	2	2		Hex.nut		
8	120124	3	2	2		Hex. cap screw		
9	388074	8	2	2		Guide plate		
10	395868	1	2	2		Cover		
11	220061	0	2	2		Seal ring	1.4	
12	387865	4	1	1		Sprocket	0.8	
13	431220	3	1	1		Shaft	3.4	
14	417785	1	1	1		Sprocket		
15	370003	9	2	2		Circlip		
16	170011	4	2	2		Flat key		
17	310048	1	1	1		Cover	0.9	
18	300013	6	4	1		Collar		
19	321204	6	1	1		Grease fitting		
20	120104	1	8	8		Hex. cap screw		
21	322358	2	8	8		Tooth lockwasher		
22	100015	8	8	8		Hex. nut		
23	388558	4	1	1		Chain assembly, Tailings elevator		Incl.figs.24 to 34
24	300506	1	26	26		Hex. cap screw		
25	140040	9	26	26		Plain washer		
26	397856	7	13	13		Paddle		
27	481595	6	11	11		Bracket	0.5	
28	353308	4	26	26		Hex. lock nut		
29	398273	2	1	1		Chain	1.0	Incl.figs.30,31,32 and 33
30	230029	4	AR	AR		Connector link		
31	308278	4	AR	AR		Offset link	0.5	
32	412031	9	AR	AR		Attachment link		
33	230028	2	AR	AR		Roller link	0.7	
34	336511	4	2	2		Scraper plate		
35	120110	4	5	5		Hex. cap screw		
36	140045	9	1	1		Tooth lockwasher		
37	140219	8	1	1		Plain washer		
38	421901	5	1	1		Drum	1.5	**Incl. fig. 92**
39	338206	9		AR		Plain washer		
	385188	6	AR			Plain washer		
40	370011	6	1	1		Circlip	1.1	

https://michelroger.be

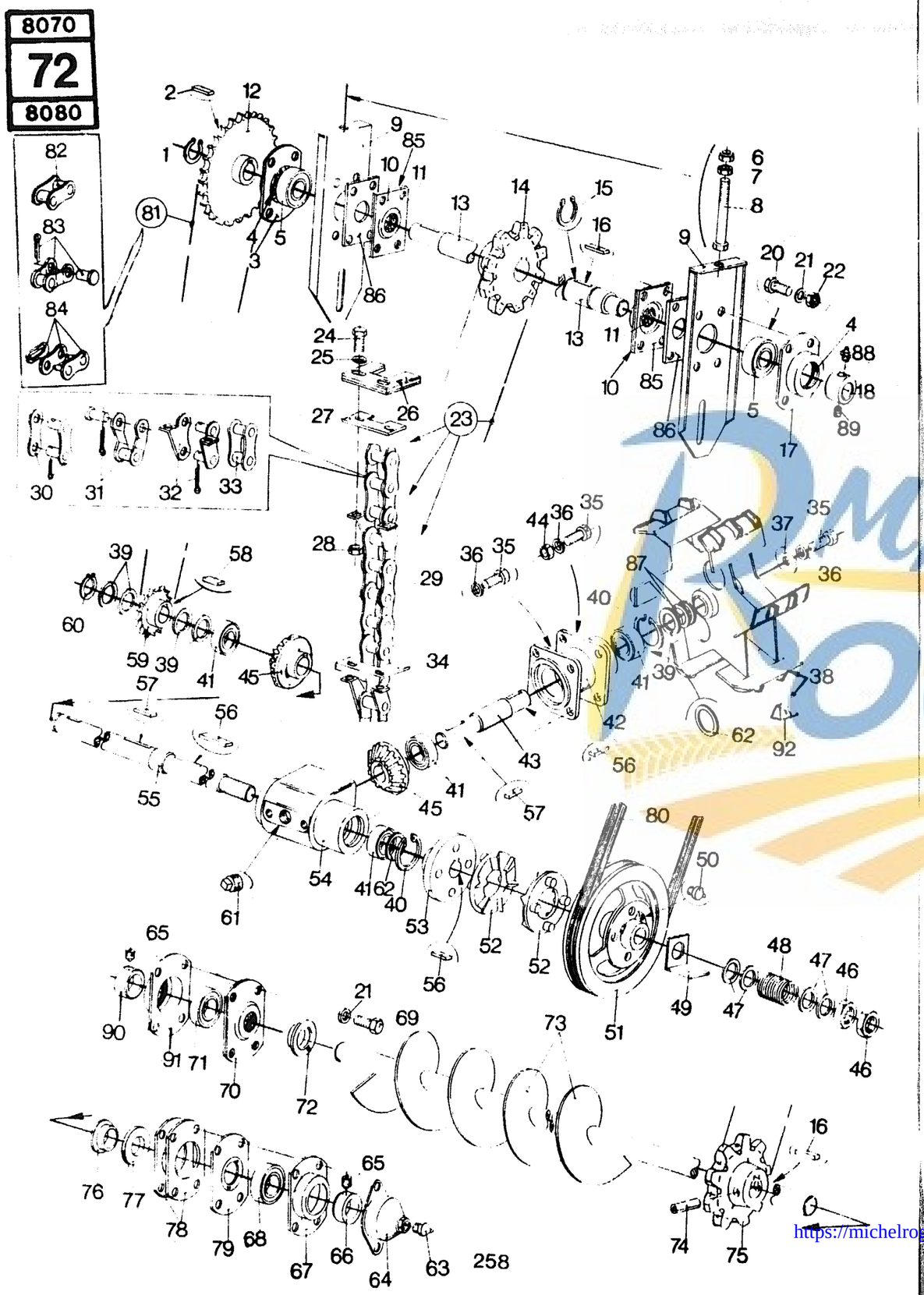

TAILINGS ELEVATOR DRIVE GROUP
COMMANDE D'ELEVATEUR D'OTONS
GETRIEBE FÜR ÜBERKEHR ELEVATOR
COMANDO DELL'ELEVATORE DEL RICUPERO
AANDRIJVING TERUGVOERELEVATOR

MODEL 8070 - 8080

Fig.	Order Ref.	CD	8070	8080	Code	Description		N.B
41	443898 2		4	4		Ball bearing	6.2	
42	387901 2		1	1		Bearing housing		
43	388531 8		1	1		Shaft	6.5	
44	100016 0		4	4		Hex. cap screw		
45	394018 8		2		864	Pinion	6.5	
	394018 8			2	625	Pinion		
	9508218 8		2		74	Pinion		Always replace both gears
	9508218 8			2	57	Pinion		Always replace both gears
46	100033 6		2	2		Hex. jam nut		
47	420204 6			4	609	Shim		
	420204 6		4		852	Shim		
	356526 9			4	51	Shim		
	356526 9		4		65	Shim		
48	321311 3		1	1		Spring	0.5	
49	393897 9		1	1		Indicator plate		
50	321204 6		1	1		Grease fitting		
51	387900 0		1	1		"V" pulley	1.0	
52	394363 9		2	2		Clutch half		
53	387759 9		1	1		Hub		
54	387904 8		1	1		Housing	6.5	
55	388532 0		1	1		Shaft		
56	170008 7		4	4		Flat key		
57	170006 3		2	2		Flat key	0.8	
58	412047 2		1	1		Flat key		
59	392329 5		1	1		Sprocket		
60	370002 7		1	1		Circlip	0.4	
61	390840 7		1	1		Plug		
62	376817 0		AR	AR		Shim		
63	150021 1		2	2		Grease fitting		
64	310067 1		2	2		Cover		
65	300480 5		2	2		Set screw, socket head		
66	300004 7		2	2		Collar	0.7	
67	310046 7		2	2		Bearing cover	0.9	
68	210033 9		2	2		Ball bearing		
69	120103 9		8	8		Hex. cap screw		
70	433659 4		1	1		Cover		
71	210043 0		1	1		Ball bearing		
72	310072 2		1	1		Cover		
73	422373 5			1		Auger	2.0	
	422377 3		1			Auger		
74	333960 2		1	1		Roll pin		
75	417785 1		1	1		Sprocket	2.0	
76	310072 2		1	1		Ring	0.9	
77	220062 2		1	1		Seal ring		
78	310085 9		2	2		Cover		

https://michelroger.be

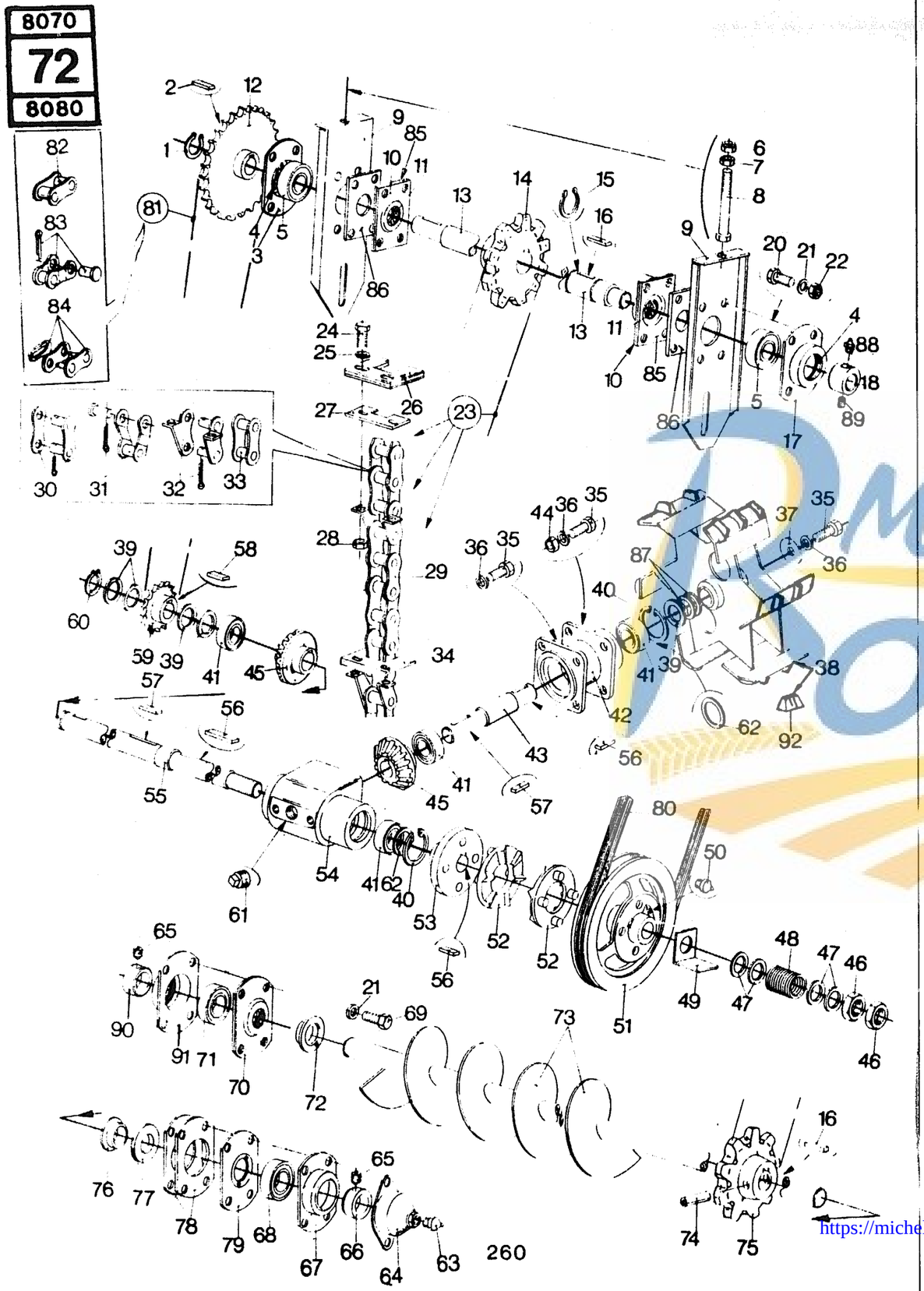

TAILINGS ELEVATOR DRIVE GROUP
COMMANDE D'ELEVATEUR D'OTONS
GETRIEBE FÜR ÜBERKEHR ELEVATOR
COMANDO DELL'ELEVATORE DEL RICUPERO
AANDRIJVING TERUGVOERELEVATOR

MODEL 8070 - 8080

Fig.	Order Ref.	CD	8070	8080	Code	Description		N.B
79	310056	8	1	1		Cover		
80	387469	4	1	1		"V" belt	0.7	
81	395313	5	1	1		Chain		Incl. figs. 82,83 and 84
82	025805	1	AR	AR		Roller link	0.5	
83	025816	4	AR	AR		Offset link	0.4	
84	025194	4	AR	AR		Coupler link		
85	396867	9	2	2		Cover		
86	399871	1	2	2		Plate		
87	419854	0	2	2		Plain washer		
88	332038	6	1	1		Grease fitting		
89	300480	5	1	1		Set screw, cup point		
90	432249	4	1	1		Collar	0.7	
91	310046	7	1	1		Bearing housing	0.9	
92	421866	9	AR	AR		Pin welded part		

MICHEL ROGER

Michel ROGER GROUP

73 ➧ 78

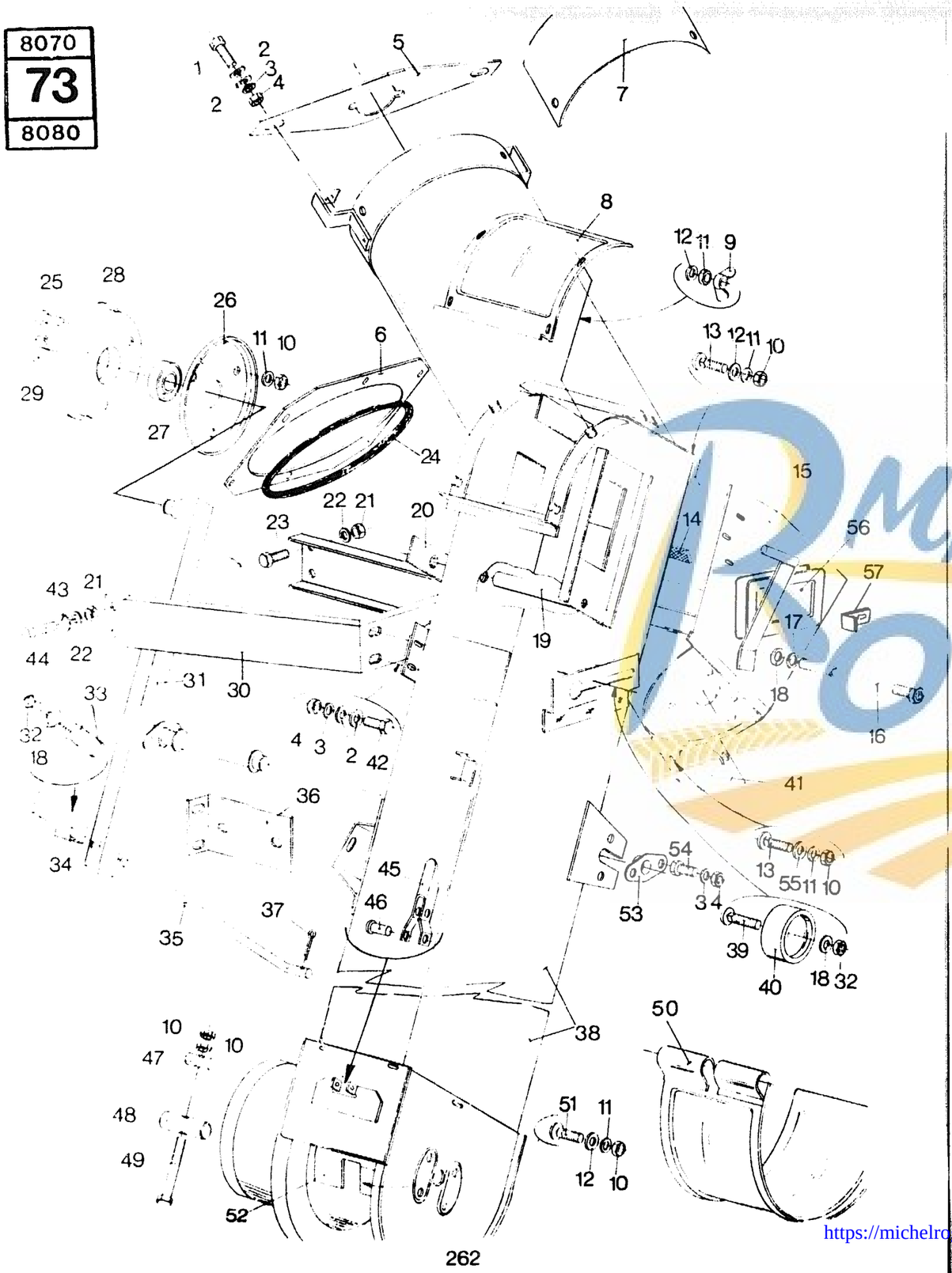

GRAIN ELEVATOR
ELEVATEUR DE GRAIN
KORNELEVATOR
ELEVATORE DELLA GRANELLA
GRAANELEVATOR

MODEL 8070 - 8080

Fig.	Order Ref.	CD	8070	8080	Code	Description	N.B
1	120161 1		2	2		Hex. cap screw	
2	378243 5		6	6		Plain washer	
3	322358 2		10	10		Tooth lockwasher	
4	100015 8		10	10		Hex. nut	
5	373868 4		1	1		Bracket	
6	399993 9		1	1		Plate	
7	420332 7		1	1		Adjusting plate	
8	393741 0		1	1		Cover	0.4
9	100004 5		4	4		Wing nut	
10	100014 6		19	19		Hex. nut	
11	322357 0		19	19		Tooth lockwasher	
12	140015 6		12	12		Plain washer	
13	120031 6		4	4		Carriage bolt	
14	397368 2		1	1		Sealing flap	
15	417121 5			1	329	Elevator casing, top	
	445067 3			1	610	Elevator casing, top	
	915338 8			1	615	Elevator casing, top	
	9509086 8			1	57	Elevator casing, top	
	417121 5		1		347	Elevator casing, top	
	445067 3		1		856	Elevator casing, top	
	916338 8		1		865	Elevator casing, top	
	9509086 8		1		75	Elevator casing, top	
16	393861 4		1	1		Special bolt	
17	140046 1		1	1		Tooth lockwasher	
18	378245 9		3	3		Plain washer	
19	393740 8		1	1		Bushing	
20	397447 0		1	1		Locking plate	
21	100016 0		4	4		Hex. nut	
22	140045 9		4	4		Tooth lockwasher	
23	120110 4		2	2		Hex. cap screw	
24	309026 2		1	1		Seal ring	
25	120099 8		9	9		Hex. cap screw	
26	290119 7			1	326	Idler half	
	290119 7		1		342	Idler half	
	330737 6			1	36	Idler half	
	330737 6		1		39	Idler half	
27	034439 5			1	326	Ball bearing	1.0
	034439 5		1		342	Ball bearing	
	443898 2			1	36	Ball bearing	
	443898 2		1		39	Ball bearing	
28	290122 4		1	1		Idler half	
29	370002 7		1	1		Circlip	0.4

https://michelroger.be

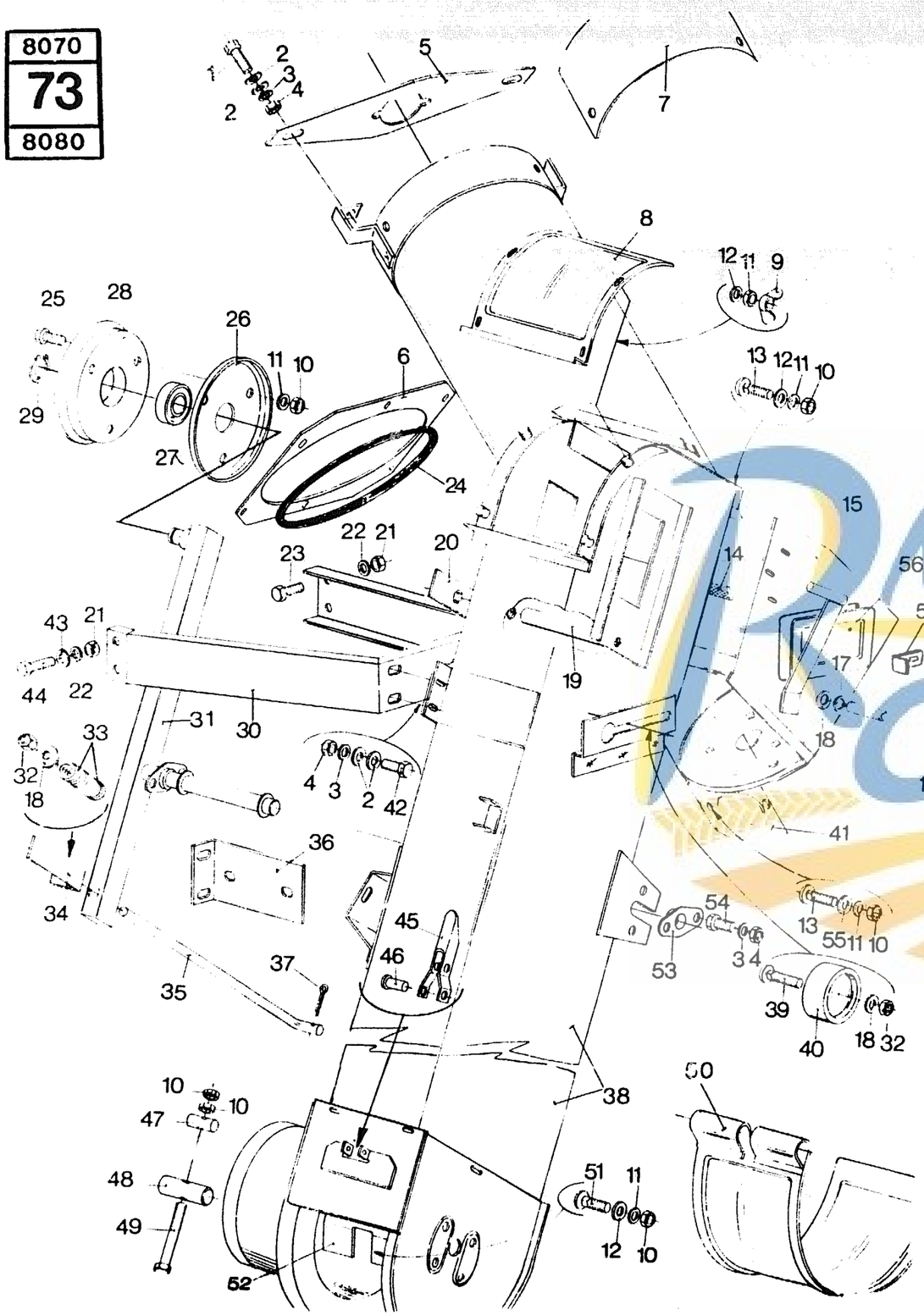

264

GRAIN ELEVATOR
ELEVATEUR DE GRAIN
KORNELEVATOR
ELEVATORE DELLA GRANELLA
GRAANELEVATOR

MODEL 8070 - 8080

Fig.	Order Ref.	CD	8070	8080	Code	Description		N.B
30	397077 5		1	1		Support		
31	393738 3			1	326	Support		
	393738 3		1		342	Support		
	444186 4			1	36	Support		
	444186 4		1		39	Support		
32	100038 6		2	2		Hex. lock nut		
33	337829 8		1	1		Spring		
34	389174 1		1	1		Indicator plate		
35	388629 5		1	1		Adjusting rod		
36	396111 8		1	1		Bracket		
37	130003 9		1	1		Cotter pin		
38	393706 6			1	326	Casing, Grain elevator		Incl.figs.45 and 46
	393706 6		1		342	Casing, Grain elevator	5.0	
	444331 3			1	36	Casing, Grain elevator		
	444331 3		1		39	Casing, Grain elevator		
39	334682 3			1		Carriage bolt		
40	334970 4		1	1		Chain idler	0.5	
41	391437 3		1	1		Cover		
42	120104 1		2	2		Hex. cap screw		
43	378244 7		2	2		Plain washer		
44	120109 1		2	2		Hex. cap screw		
45	488940 5		1	1		Locking handle		
46	130070 0		2	2		Rivet		
47	260190 1		1	1		Hinge clamp		
48	260023 8		1	1		Hinge clamp		
49	328873 0		1	1		Hex. cap screw		
50	393677 3		1	1		Cover, smooth		
	394858 8		1	1		Cover, perforated		
51	120032 8		2	2		Carriage bolt		
52	425697 4		1	1		Scraper		
53	338712 2		1	1		Bearing	0.4	
54	120103 9		2	2		Hex. cap screw		
55	337411 3		2	2		Plain washer		
56	916303 5			1	56	Cover		
	916303 5		1		71	Cover		
57	425093 4			2	56	Clamp		
	425093 4			2	71	Clamp		

https://michelroger.be

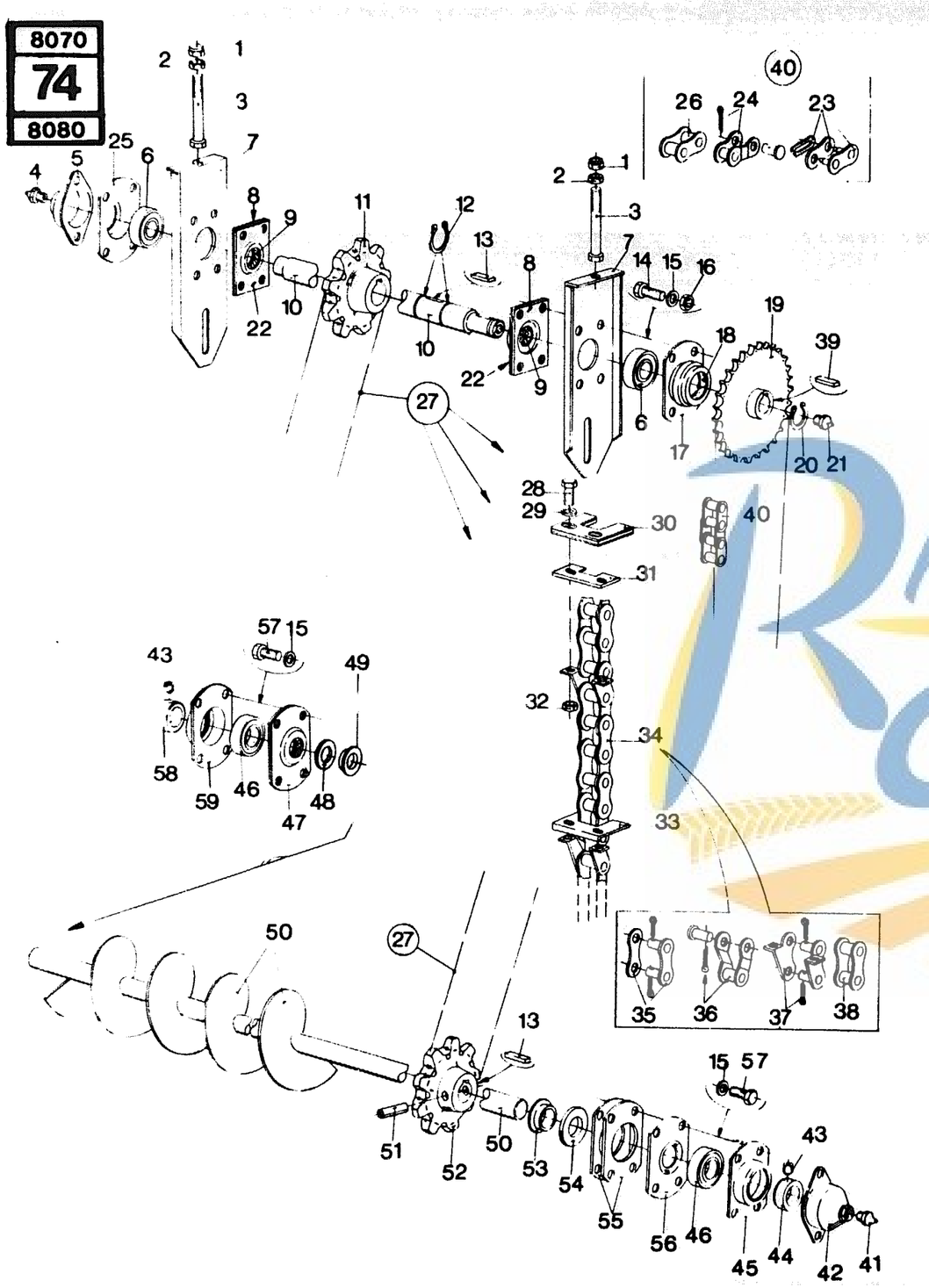

GRAIN ELEVATOR DRIVE GROUP
COMMANDE D'ELEVATEUR DE GRAINS
GETRIEBE FÜR KORNELEVATOR
COMANDO DELL'ELEVATORE DELLA GRANELLA
AANDRIJVING GRAANELEVATOR

MODEL 8070 - 8080

Fig.	Order Ref.	CD	8070	8080	Code	Description		N.B.
1	100038	6	2	2		Hex.lock nut		
2	337475	7	2	2		Hex. nut		
3	120124	3	2	2		Hex. cap screw		
4	332039	8	1	1		Grease fitting		
5	396870	6	1	1		Bearing cover	0.5	
6	210032	7	2	2		Ball bearing	1.0	
7	388074	8	2	2		Guide plate		
8	396867	9	2	2		Bearing cover	1.4	
9	220061	0	2	2		Felt ring		
10	417804	3	1	1		Shaft	2.8	
11	417785	1	1	1		Sprocket		
12	370003	9	2	2		Circlip		
13	170011	4	2	2		Flat key		
14	120104	1	AR	AR		Hex. cap screw		
15	322358	2	AR	AR		Tooth lockwasher		
16	100015	8	AR	AR		Hex. nut		
17	310048	1	1	1		Bearing cover	0.9	Incl.fig.18
18	220011	5	1	1		Felt ring		
19	387865	4	1	1		Sprocket		
20	370002	7	2	2		Circlip	0.3	
21	321204	6	2	2		Grease fitting		
22	396868	1	2	2		Bearing cover		
23	025194	4	AR	AR		Coupler link	0.4	
24	025816	4	AR	AR		Offset link		
25	310045	5	1	1		Bearing housing	1.0	
26	025805	1	AR	AR		Roller link	0.5	
27	393697	5	1	1		Grain elevator chain assembly		Incl. figs. 28 to 34
28	300506	1	44	44		Hex. cap screw		
29	140040	9	44	44		Plain washer		
30	397984	8	22	22		Paddle		
31	393694	9	20	20		Reinforcement plate		
32	353308	4	44	44		Hex. lock nut		
33	393695	1	2	2		Scraper plate		
34	398272	0	1	1		Chain assy, Grain elevator	0.9	Incl.figs.35,36,37 and 38
35	230029	4	AR	AR		Connector link		
36	308278	4	AR	AR		Offset link	0.5	
37	412031	9	AR	AR		Attachment link		
38	230028	2	AR	AR		Roller link		
39	170030	4	1	1		Flat key	0.8	
40	350418	4	1	1		Chain	0.5	Incl.figs.23,24 and 26

https://michelroger.be 166

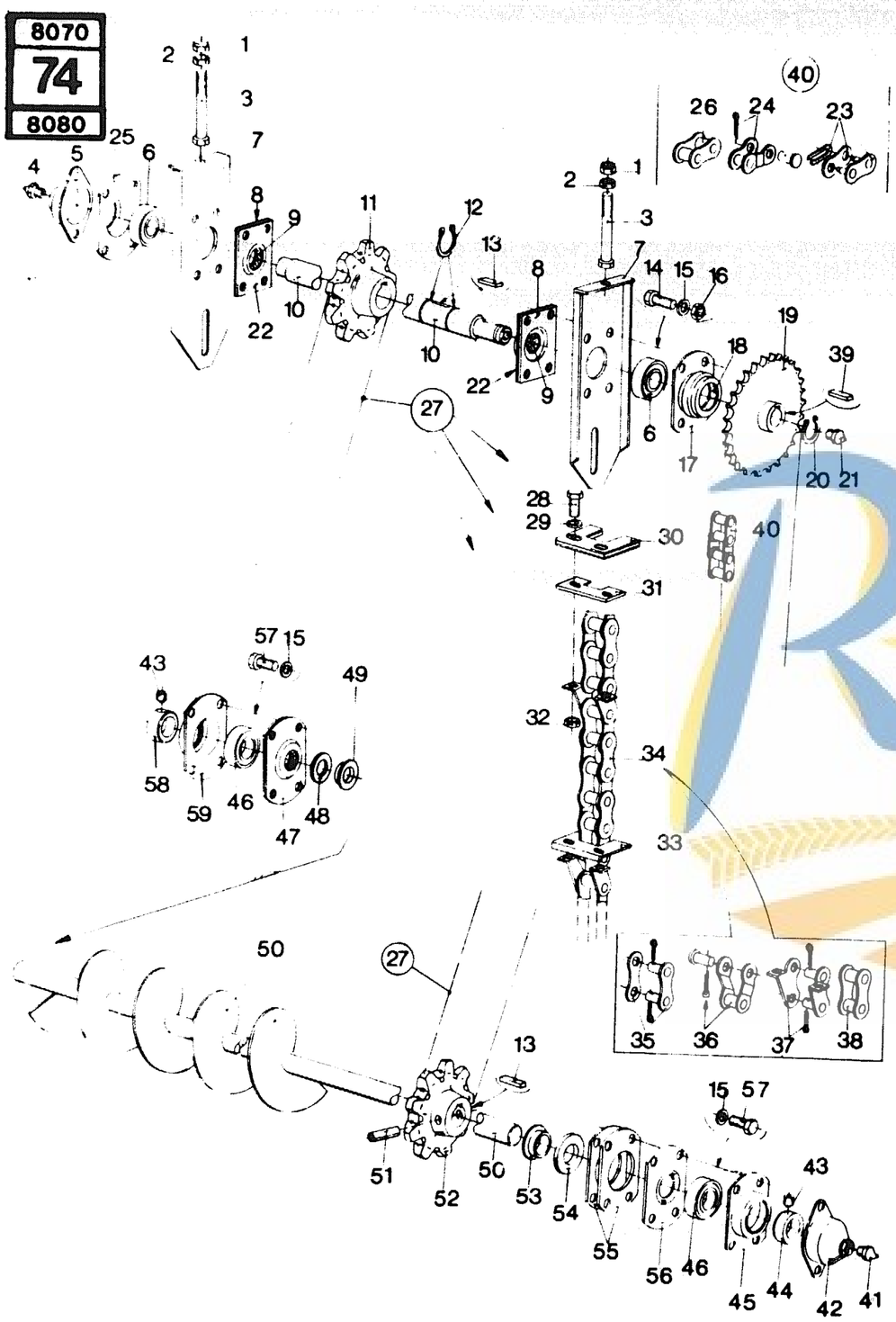

GRAIN ELEVATOR DRIVE GROUP
COMMANDE D'ELEVATEUR DE GRAINS
GETRIEBE FÜR KORNELEVATOR
COMANDO DELL'ELEVATORE DELLA GRANELLA
AANDRIJVING GRAANELEVATOR

MODEL 8070 - 8080

Fig.	Order Ref.	CD	8070	8080	Code	Description		N.B.
41	150021	1	2	2		Grease fitting		
42	310067	1	2	2		Cover	0.5	
43	300480	5	2	2		Set screw, socket head		
44	300004	7	2	2		Collar		
45	310046	7	2	2		Bearing housing		
46	210033	9	2	2		Ball bearing		
47	433659	4	1	1		Bearing cover	0.9	Incl.fig.48
48	220062	2	1	1		Felt ring		
49	310072	2	1	1		Cover		
50	422371	1		1		Auger	2.0	
	422375	9	1			Auger		
51	333960	2		1	611	Roll pin		
	333960	2	1		855	Roll pin		
	130047	1		1	56	Roll pin		
	130047	1	1		71	Roll pin		
52	417785	1	1	1		Sprocket	2.0	
53	310072	2	1	1		Cover	1.0	
54	220062	2	1	1		Felt ring		
55	310085	9	1	2		Cover	0.9	
56	310056	8	1	1		Cover		
57	120103	9	1	8		Hex. cap screw		
58	432249	4	1	1		Collar	0.7	
59	310046	7	1	1		Bearing housing	0.9	

https://michelroger.be 167

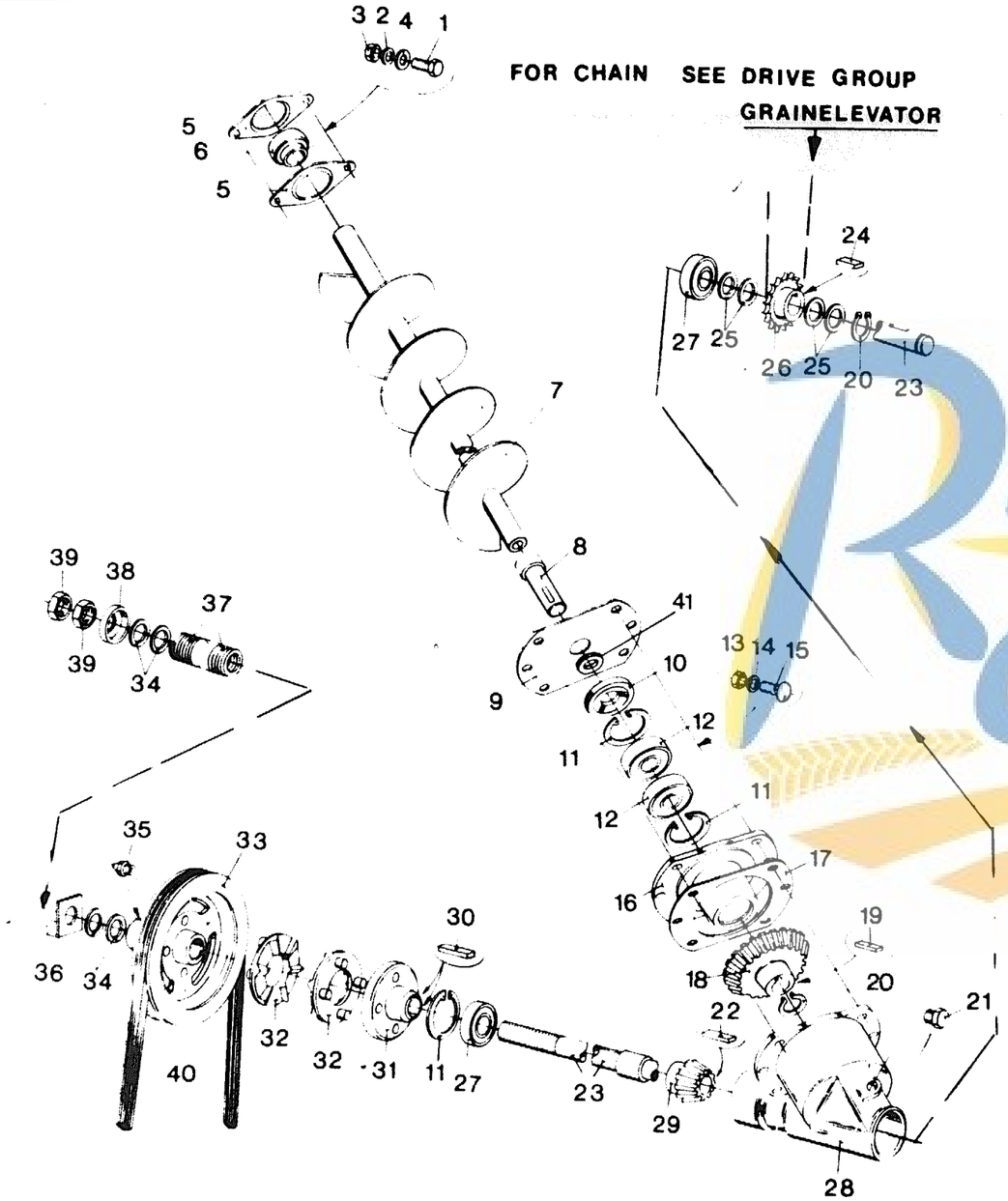

GRAIN TANK LOADING AUGER
VIS DE CHARGEMENT DE LA TREMIE
KORNTANK LADESCHNECKE
COCLEA DI CARICO DEL SERBATOIO DEL GRANO
LAADVIJZEL GRAANTANK

MODEL 8070 - 8080

Fig.	Order Ref.	CD	8070	8080	Code	Description	N.U
1	120104 1		AR	AR		Hex. cap screw	
2	322358 2		AR	AR		Tooth lockwasher	
3	100015 8		AR	AR		Hex.nut	
4	378243 5		2	2		Plain washer	
5	056128 2		2	2		Bearing flange	0.7
6	325103 6		1	1		Ball bearing	
7	387897 1		1		347	Grain auger w/a	0.8
	445064 7		1		44	Grain auger w/a	
	387897 1			1	329	Grain auger w/a	
	445064 7			1	39	Grain auger w/a	
8	393318 3		1		347	Shaft	1.6
	432695 9		1		44	Shaft	
	393318 3			1	329	Shaft	
	432695 9			1	39	Shaft	
9	393369 0		1		347	Cover	1.9
	393369 0			1	329	Cover	
10	378273 8		1	1		Seal ring	2.3
11	370011 6		3	3		Circlip	2.8
12	210075 7		2	2		Ball bearing	
13	412126 0		4	4		Hex. nut	
14	140045 9		4	4		Tooth lockwasher	
15	374892 6		4	4		Carriage bolt	
16	433665 7		1		347	Bearing housing	2.8
	432666 8		1		44	Bearing housing	
	433665 7			1	329	Bearing housing	
	432666 8			1	39	Bearing housing	
17	388123 3		AR	AR		Shim	
18	**417953 8**		1		803	Pinion	
	417953 8			1	615	Pinion	
	9508217 6		1		74	Pinion	Always replace both gears
	9508217 6			1	57	Pinion	Always replace both gears
19	170006 3		1	1		Flat key	
20	370002 7		2	2		Circlip	2.2
21	390840 7		1	1		Plug	
22	396143 5		1	1		Flat key	
23	393744 6		1	1		Shaft	2.8
24	412047 2		1	1		Flat key	
25	338206 9		AR	AR		Plain washer	
26	392329 5		1	1		Sprocket	
27	443898 2		2	2		Ball bearing	2.8
28	387903 6		1	1		Housing	

https://michelroger.be 168

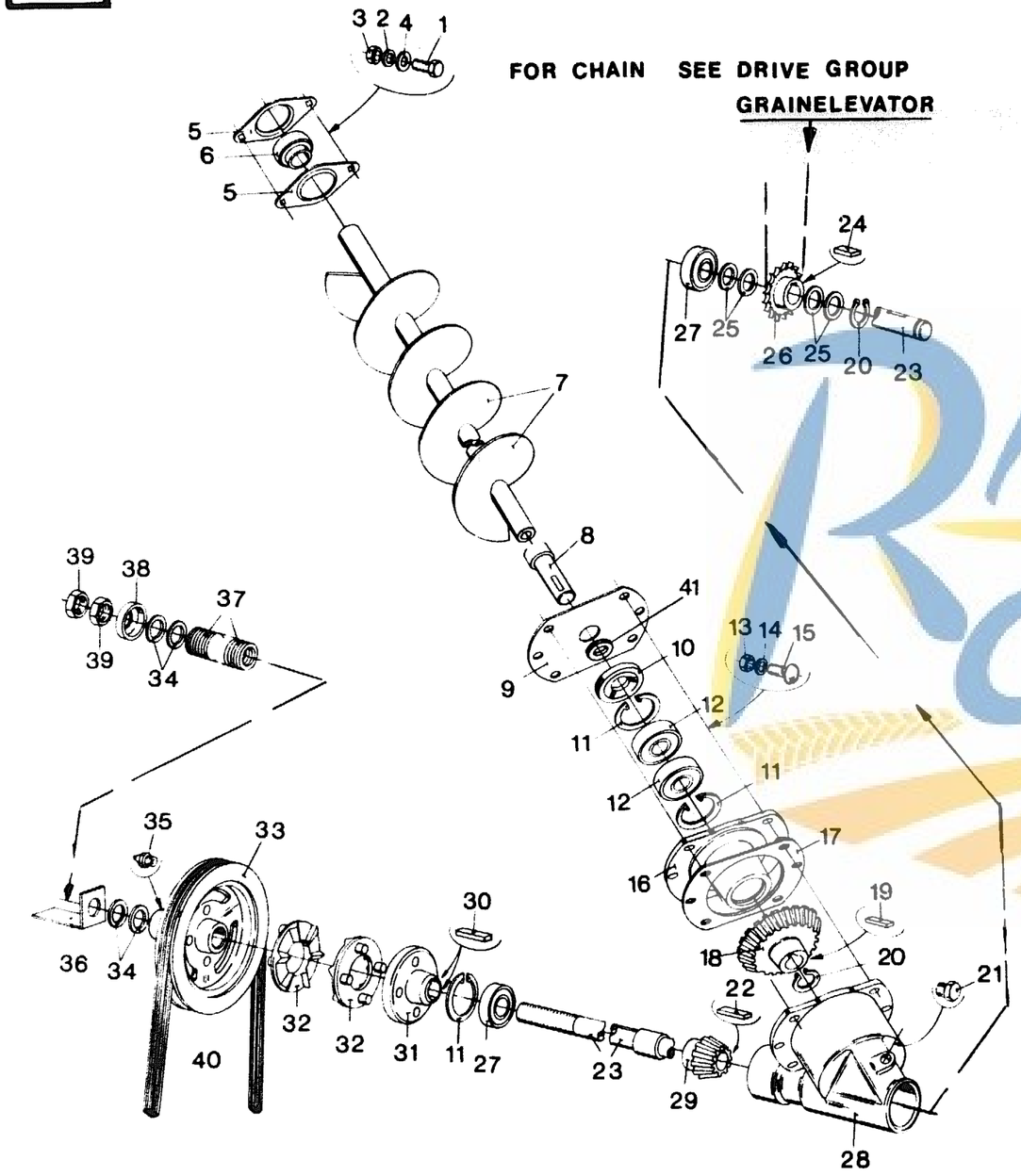

GRAIN TANK LOADING AUGER
VIS DE CHARGEMENT DE LA TREMIE
KORNTANK LADESCHNECKE
COCLEA DI CARICO DEL SERBATOIO DEL GRANO
LAADVIJZEL GRAANTANK

MODEL 8070 - 8080

Fig.	Order Ref.	CD	8070	8080	Code	Description		N.B
29	**417952 6**		1		803	Pinion		
	417952 6			1	615	Pinion		
	9508216 4		1		74	Pinion		Always replace both gears
	9508216 4			1	57	Pinion		Always replace both gears
30	170008 7		2	2		Flat key		
31	387759 9		1	1		Hub	1.0	
32	394363 9		2	2		Clutch half	0.8	
33	387900 0		1	1		"V" pulley		
34	420204 6		4	4		Shim		
35	321204 6		1	1		Grease fitting		
36	387892 1		1	1		Indicator plate		
37	333506 0		1	1		Compression spring		
38	397340 4		1	1		Cover		
39	100033 6		2	2		Hex. jam nut		
40	387469 4		1	1		"V" belt	0.7	
41	427252 4		1		347	Seal cap		
	445050 8		1		44	Seal cap		
	427252 4			1	329	Seal cap		
	445050 8			1	39	Seal cap		

MICHEL ROGER

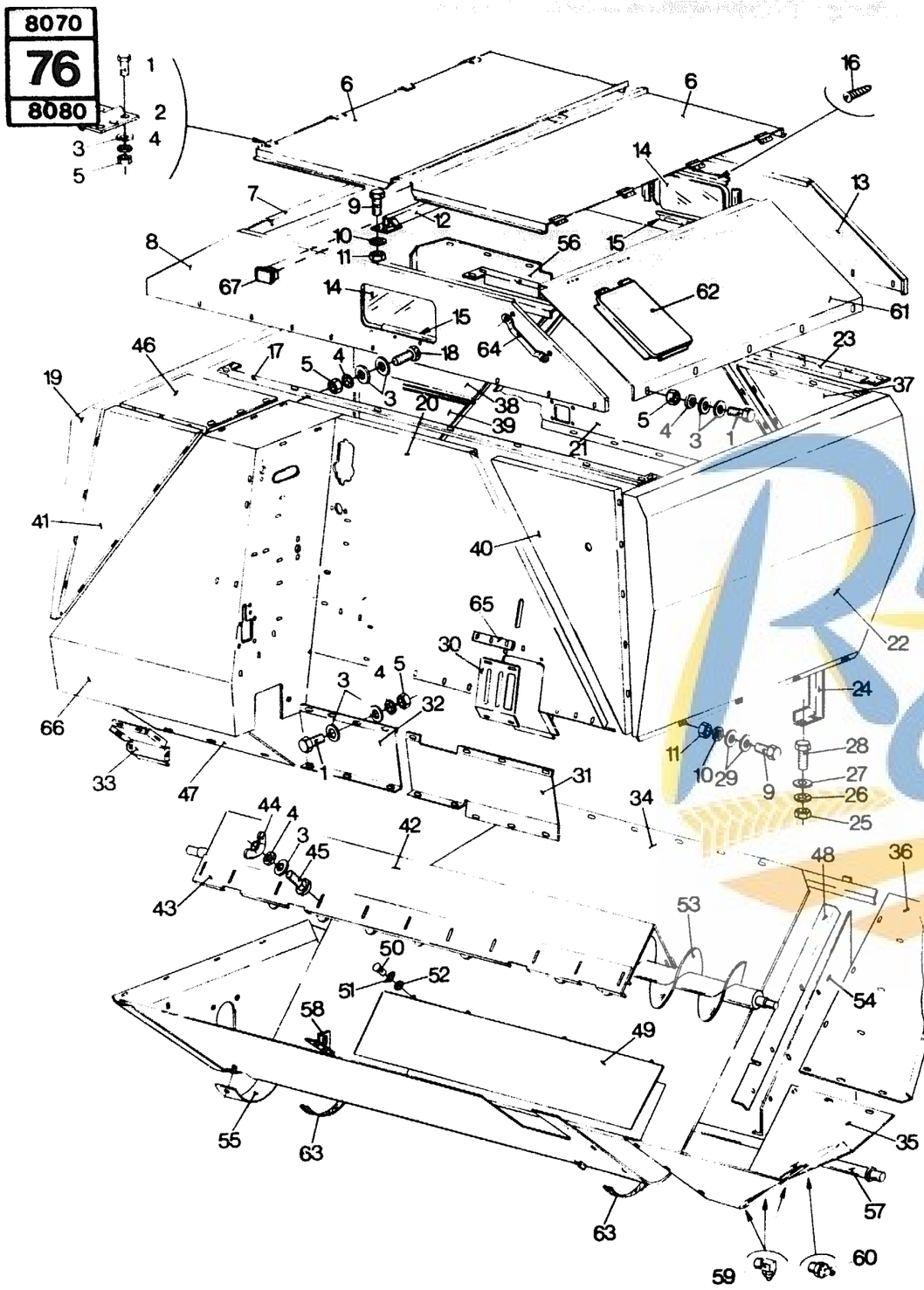

GRAIN TANK AND DISCHARGE AUGER
TREMIE ET VIS SANS FIN DE DECHARGE
KORNTANK UND ENTLADESCHNECKE
SERBATOIO DEL GRANO E COCLEA DI FONDO
GRAANTANK EN BODEMVIJZEL

MODEL 8070 - 8080

Fig.	Order Ref.	CD	8070	8080	Code	Description	N.B.
1	120099	8	161	161		Hex. cap screw	
2	350095	8	8		844	Hinge	
	452179	9	8		58	Hinge	
	350095	8		8	491	Hinge	
	452179	9		8	47	Hinge	
3	140040	9	385	385		Plain washer	
4	322357	0	215	215		Tooth lockwasher	
5	100014	6	190	190		Hex. nut	
6	394385	5		2		Cover	Incl.fig.2
	396409	9	2			Cover	
7	411484	7	1	1		Top panel	
	397346	6		1		Top panel	Small extension
8	393594	7		1		Front panel	
	396411	4	1			Front panel	
	445780	5		1		Front panel and rear panel	Small extension
9	120104	1	17	17		Hex. cap screw	
10	322358	2	29	29		Tooth lockwasher	
11	100015	8	29	29		Hex. nut	
12	411485	9	1	1		Bracket	
13	397522	0		1		Rear plate	
	396413	8	1			Rear plate	
14	435070	8	1	1		Inspection windrow	
15	374616	2	1	1		Reinforcement	
16	331619	7	1	1		Machine screw	
17	418527	6		1		Reinforcing angle	
	418668	4	1			Reinforcing angle	
18	120100	3	30	30		Hex. cap screw	
19	411311	2	1	1		Side panel, RH	
20	432826	8	1	1		Front panel	
21	390273	4		1		Rear panel	
	393531	5	1			Rear panel	
22	399635	1	1	1		Side panel	
23	411363	1		1		Reinforcing angle	
	411209	5	1			Reinforcing angle	
24	423610	0	1	1		Support	
25	100016	0	1	4		Hex.nut	
26	140045	9	4	4		Tooth lockwasher	
27	378244	7	4	4		Plain washer	
28	120110	4	4	4		Hex. cap screw	
29	378243	5	46	46		Plain washer	
30	420209	6	1	1		Cover	
31	432808	0	1	1		Guard	

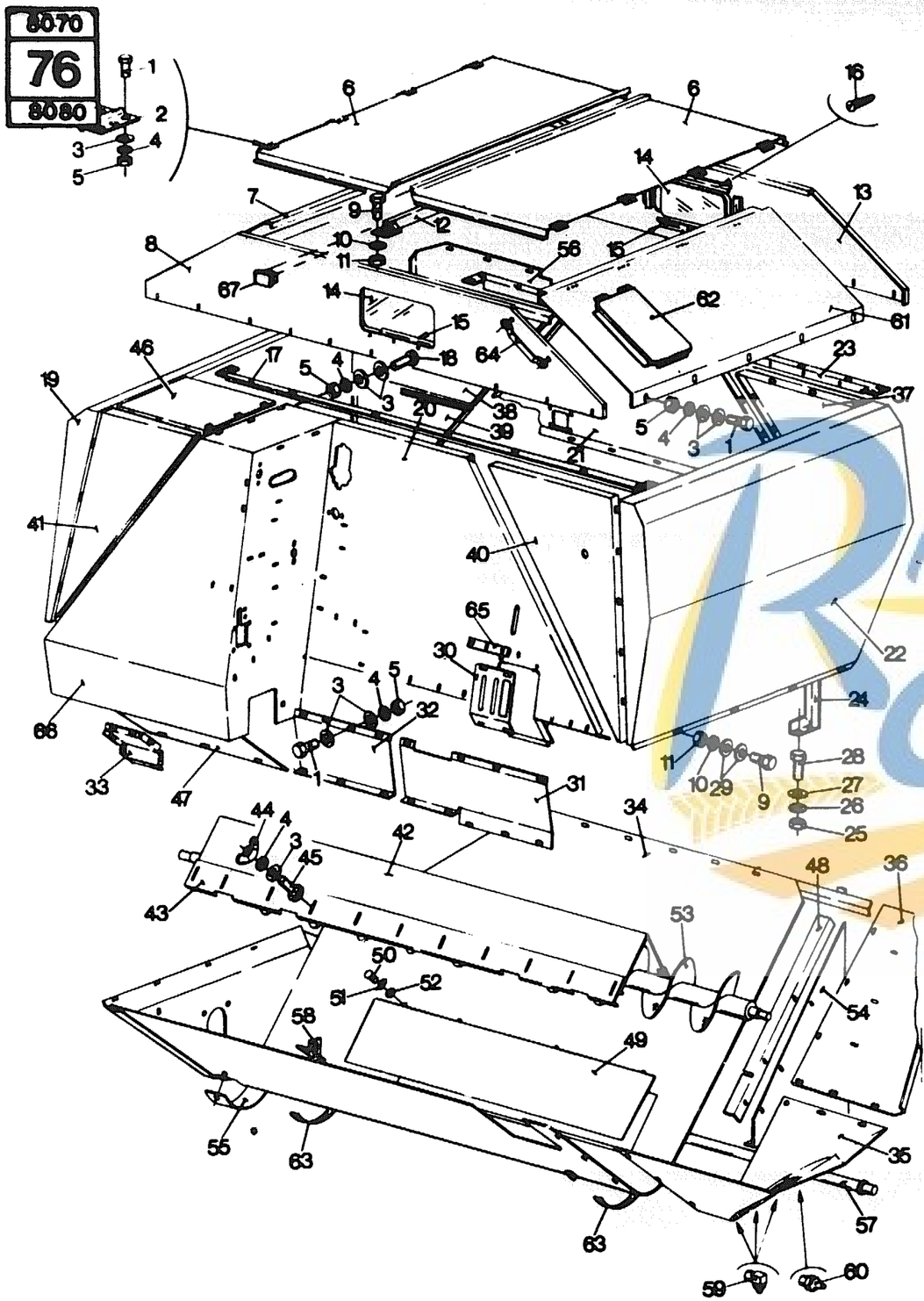

GRAIN TANK AND DISCHARGE AUGER
TREMIE ET VIS SANS FIN DE DECHARGE
KORNTANK UND ENTLADESCHNECKE
SERBATOIO DEL GRANO E COCLEA DI FONDO
GRAANTANK EN BODEMVIJZEL

MODEL 8070 - 8080

Fig.	Order Ref.	CD	8070	8080	Code	Description	N.B.
32	425645	5		1		Guard	
33	435493	4		1		Cover	
34	424012	3		1		Bottom plate	Incl.figs.50,51 and 52
	424013	5	1			Bottom plate	
35	399727	6	1	1		Bottom plate, left	
36	399739	1	1	1		Rear panel, bottom	
37	399633	7	1	1		Rear panel, left	
38	411056	0	1	1		Rear panel, right	
39	418530	3	1	1		Rear panel, right	
40	399634	9	1	1		Front panel, left	
41	411055	8	1	1		Front panel, right	
42	411370	6		1		Auger cover	
	394753	6	1			Auger cover	
43	411364	3		2		Adjusting plate	
	394478	2	2			Adjusting plate	
44	100004	5	20	20		Wing nut	
45	120031	6	20	20		Carriage bolt	
46	390265	7	1	1		Top panel	
47	390260	7	1	1		Plate	
48	410835	1	2	2		Angle	
49	389993	7		1		Inspection cover	
	393525	2	1			Inspection cover	
50	362784	3	4	4		Rivet	
51	362786	7	4	4		Turnbuckle	
52	362785	5	4	4		Cupped washer	
53	411369	3		1		Discharge auger	3.0
	399610	9	1			Discharge auger	
54	435364	1	1	1		Guard	
55	389718	5	1	1		Cover	
56	390263	3	1	1		Guard	
57	411057	2		1		Shaft	
	411058	4	1			Shaft	
58	419785	3	1	1		Bracket	
59	323713	7	3	3		Grease fitting	
60	321204	6	1	1		Grease fitting	
61	433087	1	1	1		Side panel	
	433382	7		1		Side panel	Small extensions
62	433020	1	1	1		Inspection door	
63	397327	6	2	2		Seal	
64	381540	0	1	1	325	Crab handle	
65	420379	5	1	1		Reinforcing strip	
66	432827	0		1		Front panel	
	432945	0	1			Front panel	
67	433262	3	2	2		Seal plug	

https://michelroger.be

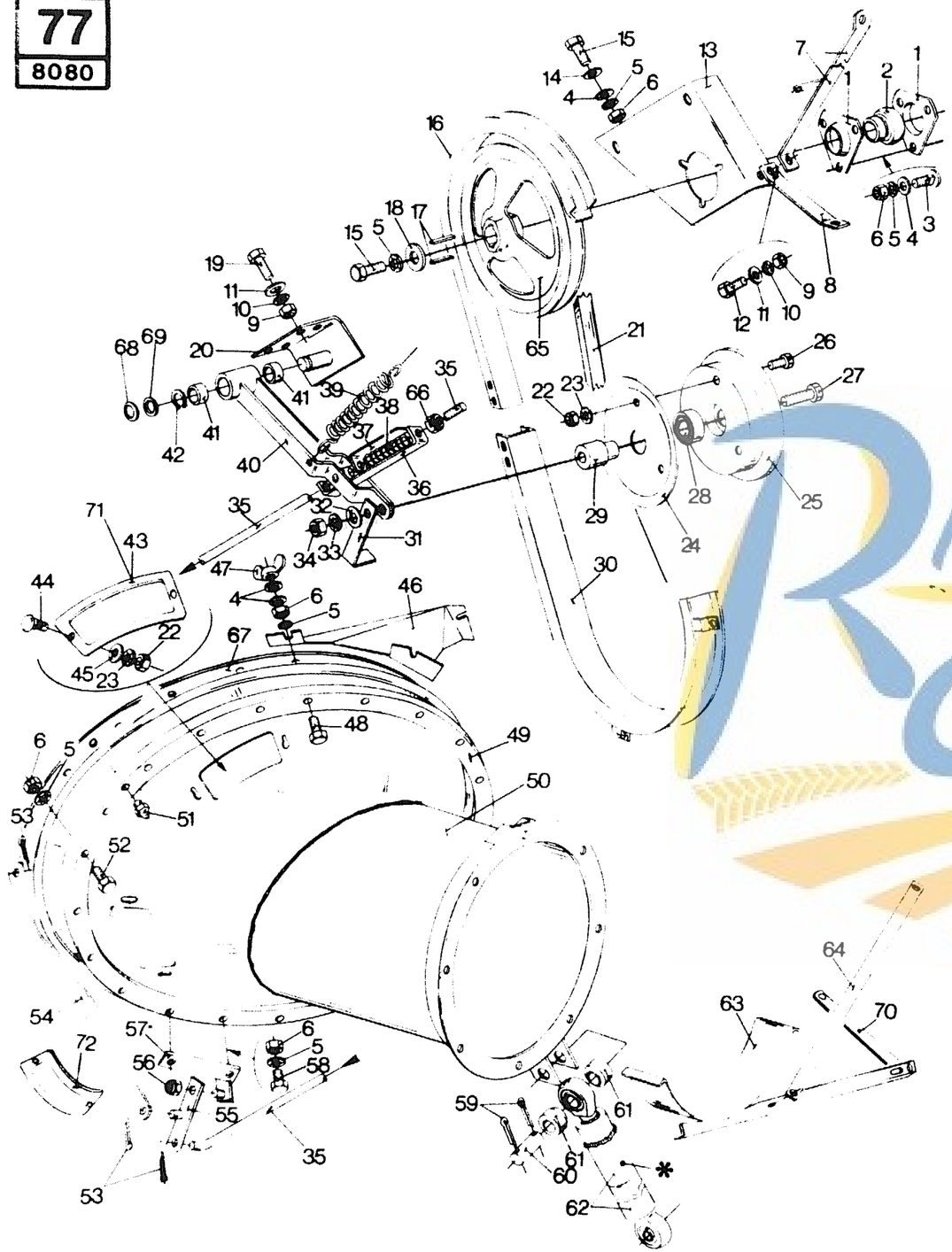

Michel ROGER

UNLOADING AUGER PIVOT
PIVOT DE LA VIS DE DECHARGEMENT
DREHPUNKT DER ENTLEERUNGSSCHNECKE
ARTICULAZIONE DELLA COCLEA DI SCARICO
SCHARNIERPUNT LOSVIJZEL

MODEL 8070 - 8080

Fig.	Order Ref.	CD	8070	8080	Code	Description	N.B.
1	043048	7	2	2		Bearing flange	] 4.1
2	325106	2	1	1		Bearing assembly	] 4.1
3	338949	3	9	9		Carriage bolt	
4	378244	7	9	9		Plain washer	
5	140045	9	9	9		Tooth lockwasher	
6	100016	0	9	9		Hex. nut	
7	423618	6	1	1		Bracket	
8	411061	1	1	1		Bracket	
9	100015	8	10	10		Hex. nut	
10	322358	2	10	10		Tooth lockwasher	
11	378243	5	10	10		Plain washer	
12	120105	3	10	10		Hex. cap screw	
13	411073	6	1	1		Bearing support	
14	140042	3	2	2		Plain washer	
15	120110	4	2	2		Hex. cap screw	
16	411130	8	1	1		Belt guide	
17	170008	7	2	2		Flat key	1.9
18	140181	7	1	1		Plain washer	
19	120161	1	2	2		Hex. cap screw	
20	411076	2	1	1		Bracket	
21	410896	9	1	1		"V" belt	3.9
22	100014	6	3	3		Hex. nut	
23	322357	0	3	3		Tooth lockwasher	
24	330737	6	1	1		Idler half	0.8
25	290122	4	1	1		Idler half	1.0
26	120099	8	3	3		Hex. cap screw	
27	120093	6	1	1		Hex. cap screw	
28	034439	5	1	1		Bearing	1.0
29	200072	9	1	1		Bushing	
30	411129	5	1	1		Belt guide	
31	424253	3	1	1		Belt holder	
32	378246	1	1	1		Plain washer	
33	140048	5	1	1		Tooth lockwasher	
34	100039	8	1	1		Hex. nut	
35	411072	4	1	1		Adjusting rod	
36	394266	3	1	1		Support	
37	393374	1	1	1		Indicator plate	
38	337829	8	1	1		Spring	
39	391151	7	1	1		Spring	0.5
40	411069	7	1	1		Idler arm	Incl.fig.41
41	382975	2	2	2		Bushing	0.8
42	370002	7	1	1		Circlip	0.4

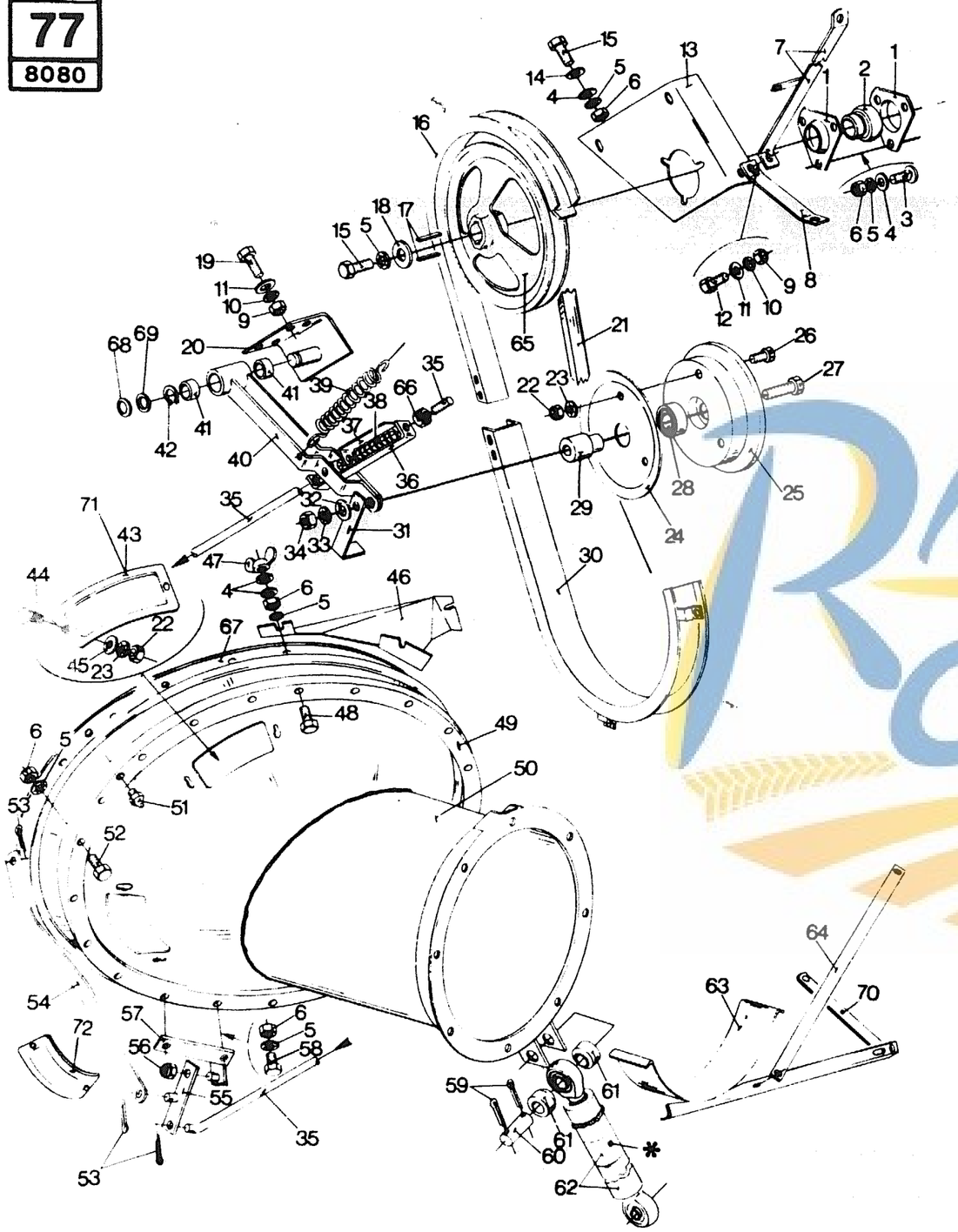

UNLOADING AUGER PIVOT
PIVOT DE LA VIS DE DECHARGEMENT
DREHPUNKT DER ENTLEERUNGSSCHNECKE
ARTCULAZIONE DELLA COCLEA DI SCARICO
SCHARNIERPUNT LOSVIJZEL

MODEL 8070 - 8080

Fig.	Order Ref.	CD	8070	8080	Code	Description	N.B.	
43	410349 0			2	325	Cover		
	410349 0		2		338	Cover		
44	120031 6		4	4		Carriage bolt		
45	140015 6		9	9		Plain washer		
46	411313 6		1	1		Plate		
47	100006 9		2	2		Wing nut		
48	120115 4		2	2		Hex. cap screw		
49	399603 4		1	1		Ring		
50	399613 5			1	325	Knee joint	4.8	
	399613 5		1		338	Knee joint		
	438139 7			1	35	Knee joint		
	438139 7		1		35	Knee joint		
51	321204 6		4	4		Grease fitting		
52	120113 0		12	12		Hex. cap screw		
53	130003 9		3	3		Cotter pin		
54	411079 8		1	1		Arm		
55	411078 6		1	1		Hinge plate		
56	100037 4		1	1		Lock nut		
57	411065 9		1	1		Bracket		
58	120114 2		4	4		Hex. cap screw		
59	130014 2		4	4		Cotter pin		
60	412078 7		2	2		Shaft	0.5	
61	411320 1		4	4		Bushing		
62	410445 4		1	1		Cylinder, Unloading auger	1.4	Incl.fig. *
63	399588 0			1	325	Saddle		
	399588 0		1		338	Saddle		
	428009 0			1	35	Saddle		
	428009 0		1		35	Saddle		
64	399591 7			1	325	Support		
	399591 7		1		338	Support		
	428007 6			1	35	Support		
	428007 6		1		35	Support		
65	399825 4		1	1		Pulley	1.9	
66	100038 6		1	1		Hex. lock nut		
67	420082 6		1	1		Ring		
68	140229 9		AR	AR		Spacer washer		
69	140103 3		AR	AR		Spacer washer		
70	435114 2		1	1		Support		
71	410349 0		1	1	35	Cover		
72	434330 9		1	1	35	Cover		
*	422379 7			1		Repair kit		

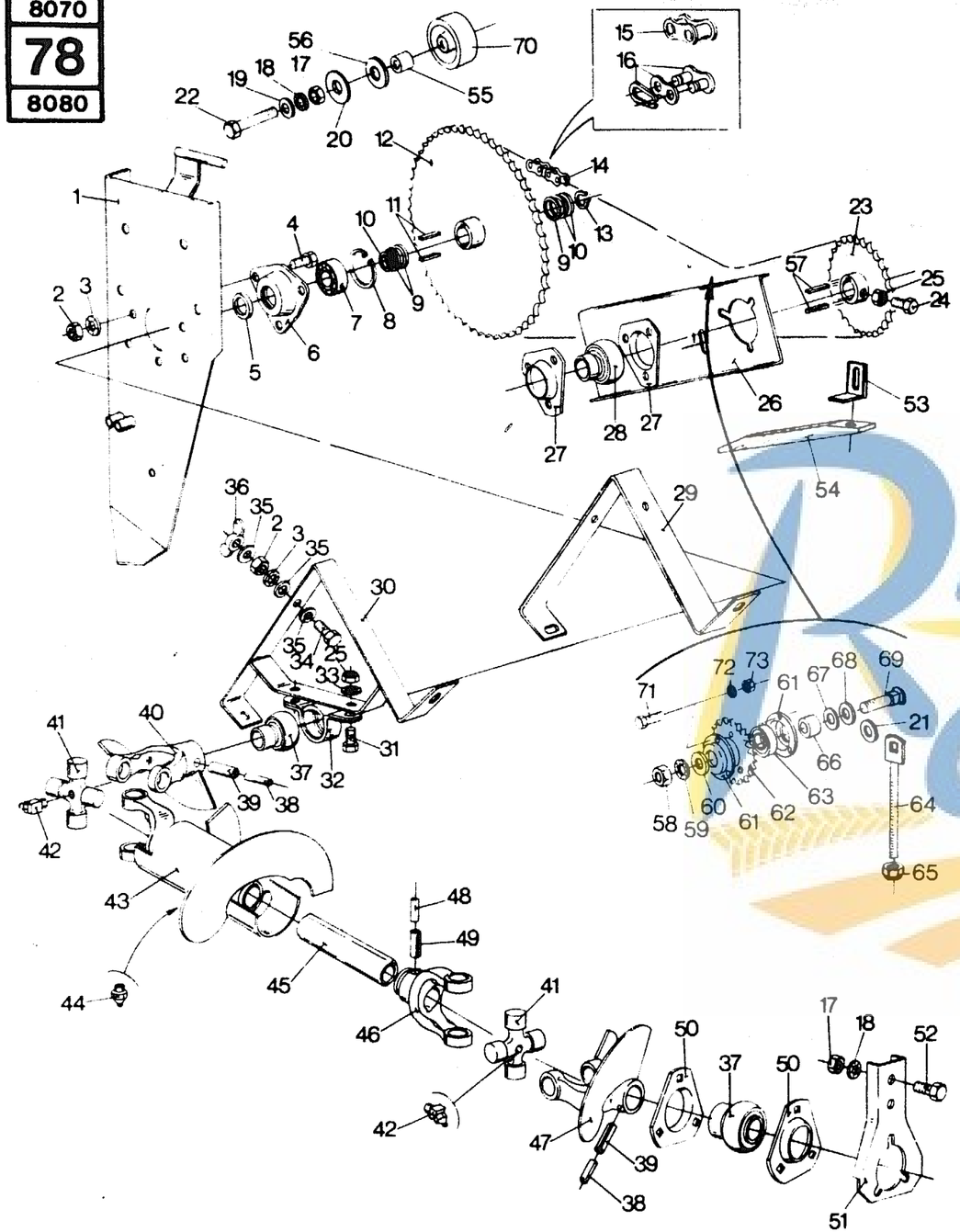

UNLOADING AUGER DRIVE
COMMANDE VIS SANS FIN DE DECHARGE
UMLADESCHNECKE ANTRIEB
COMANDO DELLA COCLEA DI SCARICO
AANDRIJVING LOSVIJZEL

MODEL 8070-8080

Fig.	Order Ref.	CD	8070	8080	Code	Description	N.B	
1	410539	3	1	1		Plate		
2	100015	8	3	3		Hex. nut		
3	322358	2	3	3		Tooth lockwasher		
4	120104	1	7	7		Hex. cap screw		
5	220010	3	1	1		Seal ring	2.0	
6	389701	0	1	1		Bearing housing		
7	210043	0	1	1		Bearing	2.0	
8	370012	8	1	1		Circlip		
9	140109	5	±4	±4		Plain washer		
10	140108	3	±2	±2		Plain washer		
11	170008	7	4	4		Flat key	1.5	
12	420347	8	1	1	624	Sprocket	1.4	
12	420347	8	1	1	865	Sprocket	1.4	
	9508656	6	1	1	75	Sprocket	1.4	
	9508656	6	1	1	57	Sprocket	1.4	
13	370003	9	1	1		Circlip	0.4	
14	410962	0	1	1		Chain assembly		Incl.figs.15 and 16
15	025805	1	139	139		Roller link	0.5	
16	025194	4	1	1		Coupler nut		
17	337475	7	1	1		Hex. nut		
18	140046	1	1	1		Tooth lockwasher		
19	378245	9	1	1		Plain washer		
20	128784	9	1	1		Washer		
21	140021	9	1	1		Washer		
22	120083	5	1	1		Hex. cap screw		
23	399895	1	1	1		Sprocket	1.4	
24	120109	1	1	1		Hex. cap screw		
25	100016	0	9	9		Hex. nut		
26	424254	5	1	1		Plate		
27	043048	7	4	4		Bearing flange	1.7	
28	325106	2	2	2		Bearing assembly		
29	389817	5	1	1		Support		
30	399599	3	1	1		Support		
31	120110	4	2	2		Hex. cap screw		
32	410433	9	1	1		Bearing housing	0.5	
33	140045	9	9	9		Tooth lockwasher		
34	300381	5	2	2		Hex. cap screw		
35	378243	5	15	15		Plain washer		
36	100005	7	2	2		Wing nut		
37	212606	6	2	2		Bearing assembly	0.7	– 2.3 (bearing on ref. 30)
38	130051	0	2	2		Roll pin	0.4	
39	130054	6	2	2		Roll pin		
40	410376	7	1	1		Yoke and flighting	1.9	
41	350114	0	2	2		Journal bearing assy		Incl.fig.42

https://michelroger.be 174

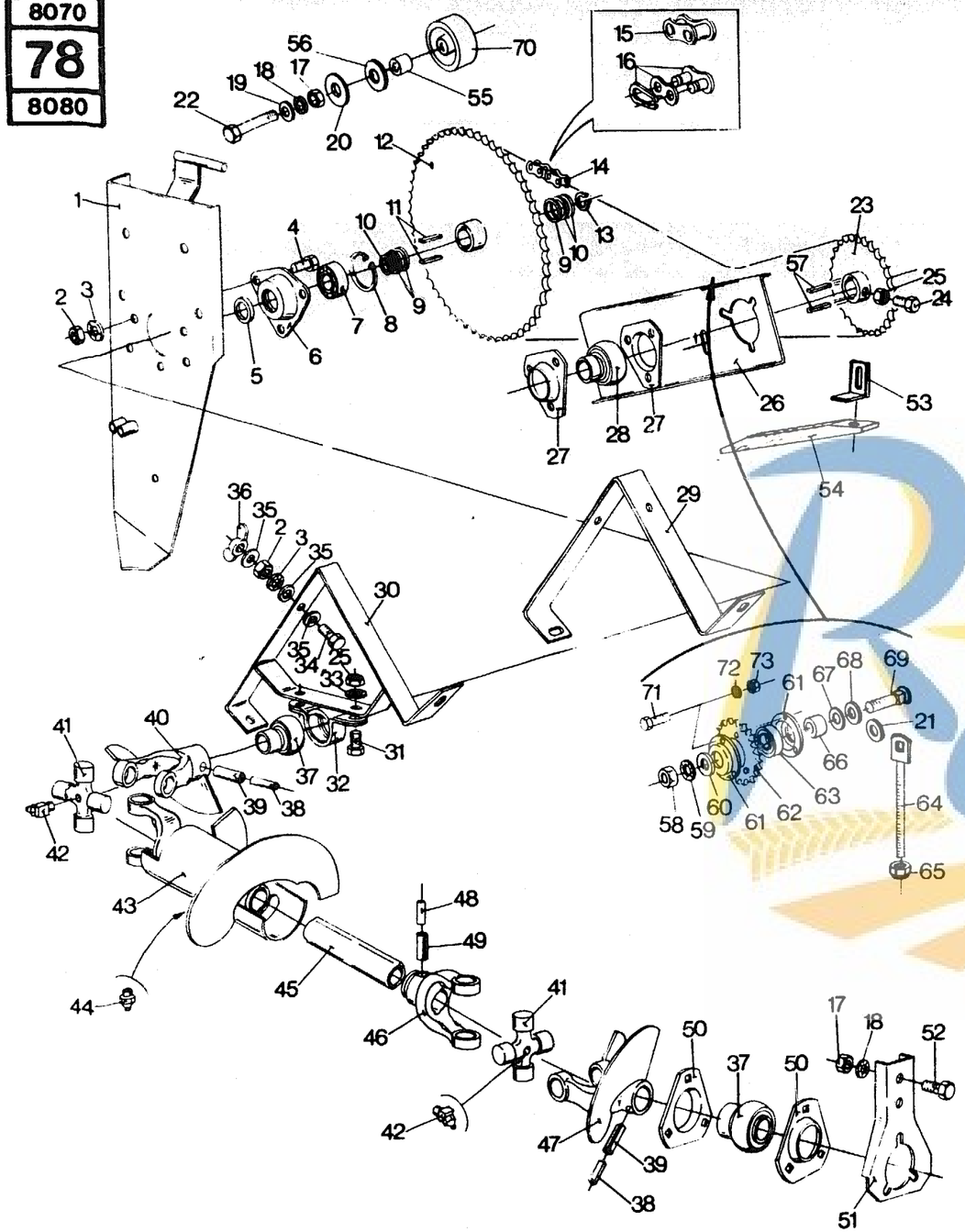

UNLOADING AUGER DRIVE
COMMANDE VIS SANS FIN DE DECHARGE
UMLADESCHNECKE ANTRIEB
COMANDO DELLA COCLEA DI SCARICO
AANDRIJVING LOSVIJZEL

MODEL 8070 - 8080

Fig.	Order Ref.	CD	8070	8080	Code	Description	N.B
42	150024 7		2	2		Grease fitting	0.4
43	399598 1		1	1		Auger and yoke	1.9
44	321204 6		1	1		Grease fitting	
45	399388 6		1	1		Tube, lemon profile	2.2
46	399386 2		1	1		Yoke	1.9
47	410386 8		1	1		Yoke and flighting	1.9
48	333960 2		1	1		Roll pin	0.4
49	130053 4		1	1		Roll pin	
50	410434 1		2	2		Bearing flange	2.3
51	399601 0		1	1		Bearing support	
52	300388 9		2	2		Hex. cap screw	
53	420348 0		2	2		Plate	
54	392459 0		1	1		Chain guide	
55	200097 1		1	1		Bushing	
56	398774 4		1	1		Washer	
57	170010 2		2	2		Flat key	1.5
58	100020 9		1	1		Hex. nut	
59	140048 5		1	1		Tooth lockwasher	
60	378246 1		2	2		Washer	
61	310146 9		2	2		Cover plate	
62	270064 6		1	1		Sprocket	
63	034439 5		1	1		Ball bearing	
64	323903 0		1	1		Adjusting rod	
65	412126 0		1	1		Hex. lock nut	
66	200071 7		1	1		Bushing	
67	140096 6		AR	AR		Spacer washer	
68	140094 2		AR	AR		Spacer washer	
69	120047 9		1	1		Carriage bolt	
70	334970 4		1	1		Chain idler	
71	120100 3		3	3		Hex. cap screw	
72	322357 0		3	3		Tooth lockwasher	
73	100014 6		3	3		Hex. nut	

https://michelroger.be 175

Michel
GROUP
ROGER

79 ▸ 84

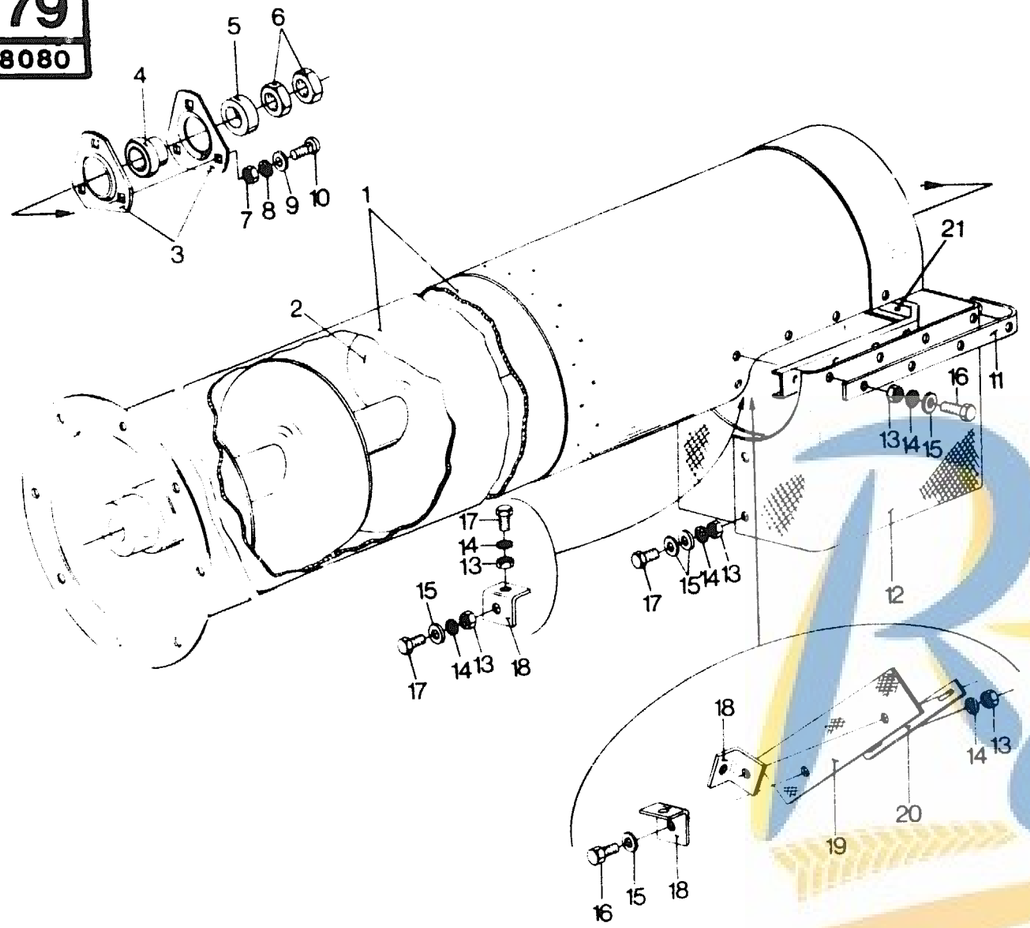

UNLOADING AUGER & TUBE
VIS ELEVATRICE & ENVELOPPE
UMLADESCHNECKE & ROHR
COCLEA DI SCARICO E TUBO DI SCARICO
LOSVIJZEL & LOSBUIS

MODEL 8070 - 8080

Fig.	Order Ref.	CD	8070	8080	Code	Description		N.B.
1	399611	1		1		Unloading tube	2.3	Length: 4 m
	392125	3	1			Unloading tube		Length: 3,5 m
2	399609	6		1		Unloading auger		Length: 4 m
	391615	1	1			Unloading auger		Length: 3,5 mm
3	043048	7	2	2		Bearing flange	0.8	
4	325106	2	1	1		Ball bearing		
5	200142	8	1	1		Bushing	0.5	
6	100033	6	2	2		Hex. jam nut	0.4	
7	100016	0	3	3		Hex. nut		
8	140045	9	3	3		Tooth lockwasher		
9	378244	7	3	3		Plain washer		
10	120112	8	3	3		Carriage bolt		
11	389240	2	2	2		Retaining strip		
12	411531	8	1		848	Canvas		
	753041	2	1		64	Canvas		
	411531	8		1	609	Canvas		
	753041	2		1	51	Canvas		
13	100014	6	20	20		Hex. nut		
14	322357	0	20	20		Tooth lockwasher		
15	140015	6	20	20		Plain washer		
16	120100	3	10	10		Hex. cap screw		
17	120099	8	9	9		Hex. cap screw		
18	333349	6	3	3		Bracket		
19	389238	7	1		347	Sealing flap		
	439876	0	1		44	Sealing flap		
	389238	7		1	329	Sealing flap		
	439876	0		1	39	Sealing flap		
20	389623	4	1	1		Retaining strip		
21	399602	2	1	1		Support		

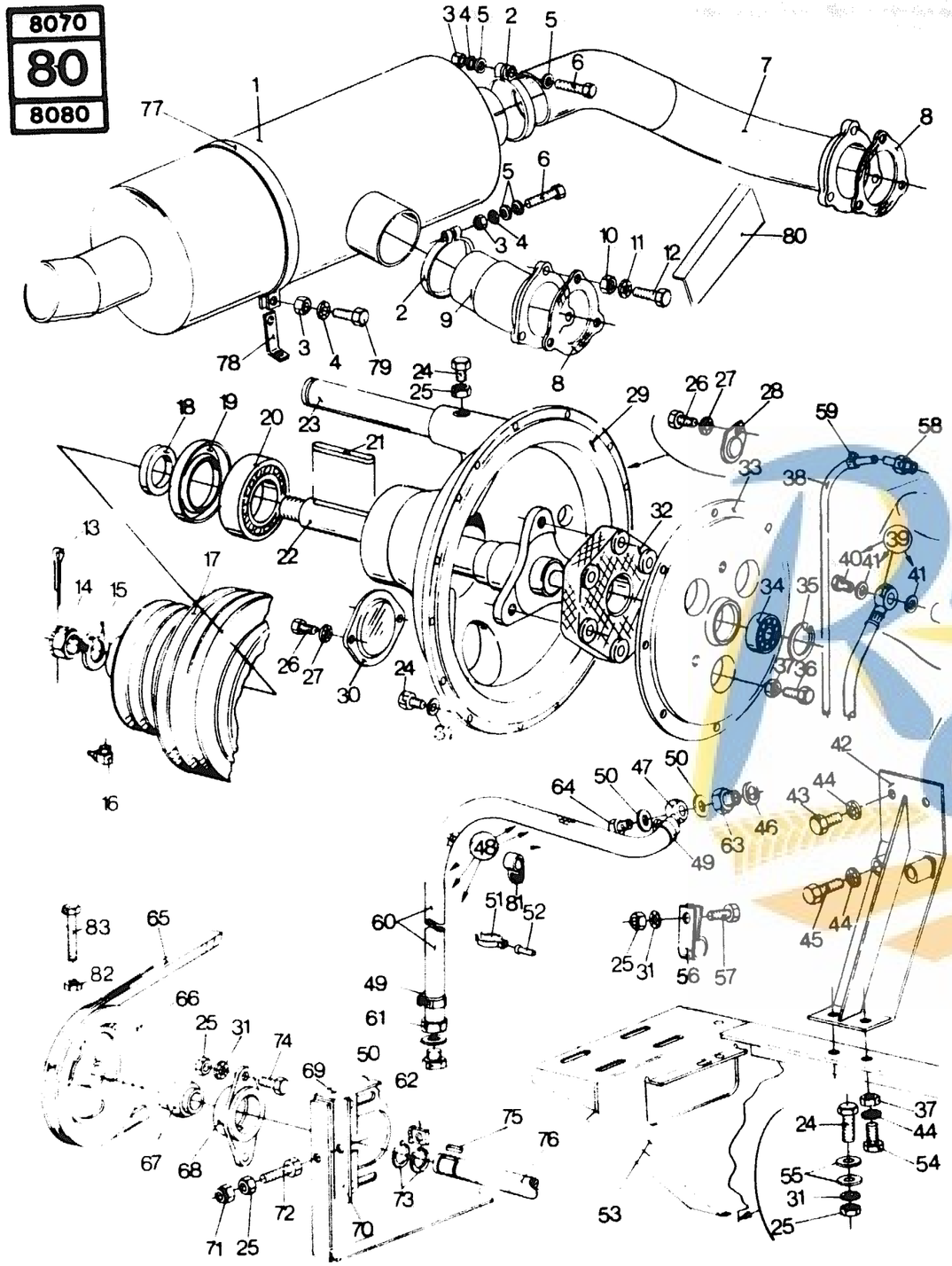

ATTACHING PARTS FOR MERCEDES OM 401 AND OM 421 ENGINES
ACCESSOIRES POUR MOTEURS MERCEDES OM 401 ET OM 421
ZUBEHÖR FÜR MERCEDES MOTOREN OM 401 UND OM 421
ACCESSORI PER MOTORI MERCEDES TIPO OM 401 E OM 421
TOEBEHOREN VOOR MERCEDES MOTOREN OM 401 EN OM 421

MODEL 8080

Fig.	Order Ref.	CD	8070	8080	Code	Description		N.B
1	388115 6			1		Silencer	1.3	
	450878 9			1		Silencer		Air filter extension
2	385386 6			2		Clamp		
3	100015 8			2		Hex. nut		
4	322358 2			4		Tooth lockwasher		
5	378243 5			4		Plain washer		
6	300510 0			2		Hex. cap screw		
7	388154 8			1		Exhaust pipe	1.7	
8	354810 0			2		Gasket		
9	391471 5			1		Exhaust pipe	1.7	
10	337475 7			6		Hex. nut		
11	140046 1			6		Tooth lockwasher		
12	300512 4			6		Hex. cap screw		
13	130016 6			1		Cotter pin		
14	390822 9			1		Castle nut	1.1	
15	140116 0			1		Washer		
16	323713 7			1		Grease fitting		
17	397275 5			1		Main drive pulley	3.3	Hydrostatic drive
	410671 3			1		Main drive pulley	3.3	Mechanical drive
18	410668 6			1		Collar		
19	387761 4			1		Grease seal	3.7	
20	387760 2			1		Ball bearing	3.9	
21	306248 9			1		Flat key		
22	411572 4			1		Shaft, Engine tail	9.8	
23	389796 9			1		Shaft	1.5	
24	120111 6			1		Hex. cap screw		
25	100016 0			1		Hex. nut		
26	120099 8			2		Hex. cap screw		
27	322357 0			2		Tooth lockwasher		
28	321662 6			2	334	Cover	5.2	
	456468 6			2	44	Cover	5.2	
29	411573 6			1		Housing, Engine bell	5.2	
30	378663 5			1		Cover		
31	140045 9			1		Tooth lockwasher		
32	385985 6			1	334	Flexible coupling		Mercedes OM 421 engine
	450679 7			1	44	Flexible coupling		Mercedes OM 421 engine
33	387908 6			1	619	Flange	9.8	
	913811 9			1	58	Flange	9.8	
34	034439 5			1	619	Bearing	9.5	
	105892 1			1	58	Bearing	9.5	
35	370011 6			1		Circlip		
36	120091 2			3		Hex. cap screw		
37	100020 9			3		Hex. nut		

GROUP
80

https://michelroger.be 178

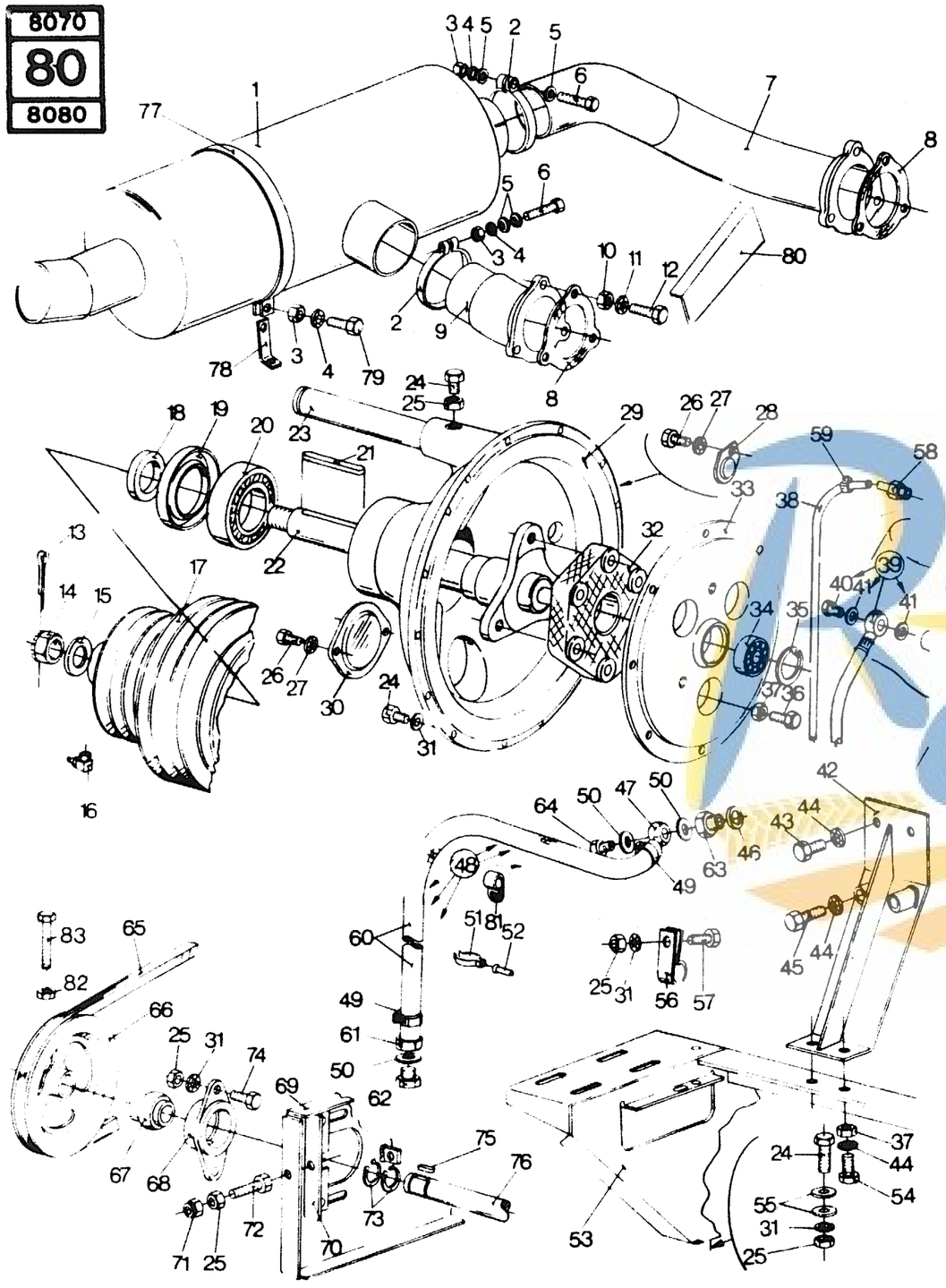

ATTACHING PARTS FOR MERCEDES OM 401 AND OM 421 ENGINES
ACCESSOIRES POUR MOTEUR MERCEDES OM 401 ET OM 421
ZUBEHÖR FÜR MERCEDES MOTOR OM 401 UND OM 421
ACCESSORI PER MOTORE MERCEDES, TIPO OM 401, TIPO OM 421
TOEBEHOREN VOOR MERCEDES MOTOR OM 401 EN OM 421

MODEL 8080

Fig.	Order Ref.	CD	8070	8080	Code	Description		N.B.
38	398094	2		1		Pipe, Fuel oil	1.0	
39	432665	6		1		Pipe assy, Fuel oil		Incl.figs.40 and 41
40	354969	5		1		Hollow screw		
41	220049	4		2		Seal washer		
42	388316	2		1		Engine support, LH		
	398506	7		1	330	Engine support, RH		
	450740	8		1	40	Engine support		
43	120126	7		4		Hex. cap screw		
44	140048	5		10		Tooth lockwasher		
45	355259	1		4		Hex. cap screw		
46	354977	2		1		Seal ring		
47	326078	2		1		Connecting piece		
48	326083	3		1		Hose assy, Oil drain		Incl.figs.47,49,50,60,61 and 62
49	326082	1		2		Hose clamp	0.7	
50	220122	0		3		Seal washer		
51	326080	7		3		Spring clip		
52	130065	9		3		Rivet		
53	398137	4		1		Engine support		
54	120256	2		4		Hex. cap screw		
55	378244	7		10		Plain washer		
56	391230	5		3		Clamp		
57	120110	4		4		Hex. cap screw		
58	394840	1		1		Connector		
59	150064	1		1		Clamp		
60	326081	9		1		Oil drain hose		
61	326079	4		1		Adapter		
62	150060	3		1		Plug		
63	398510	6		1		Adapter		
64	120258	6		1		Hollow screw		
65	389245	2		1		"V" belt	0.7	
66	425909	5		1		Pulley	1.0	
67	325110	1		1		Bearing	1.7	
68	386537	8		1		Bearing housing		
69	397470	9		1		Support		
70	397465	8		1		Adjusting bracket		
71	412141	2		4		Hex. lock nut		
72	360296	6		1		Hex. cap screw		
73	370003	9		1		Circlip	1.0	
74	120201	7		2		Hex. cap screw		
75	170030	4		1		Flat key	1.1	
76	426801	8		1		Shaft		

ROGER
Michel

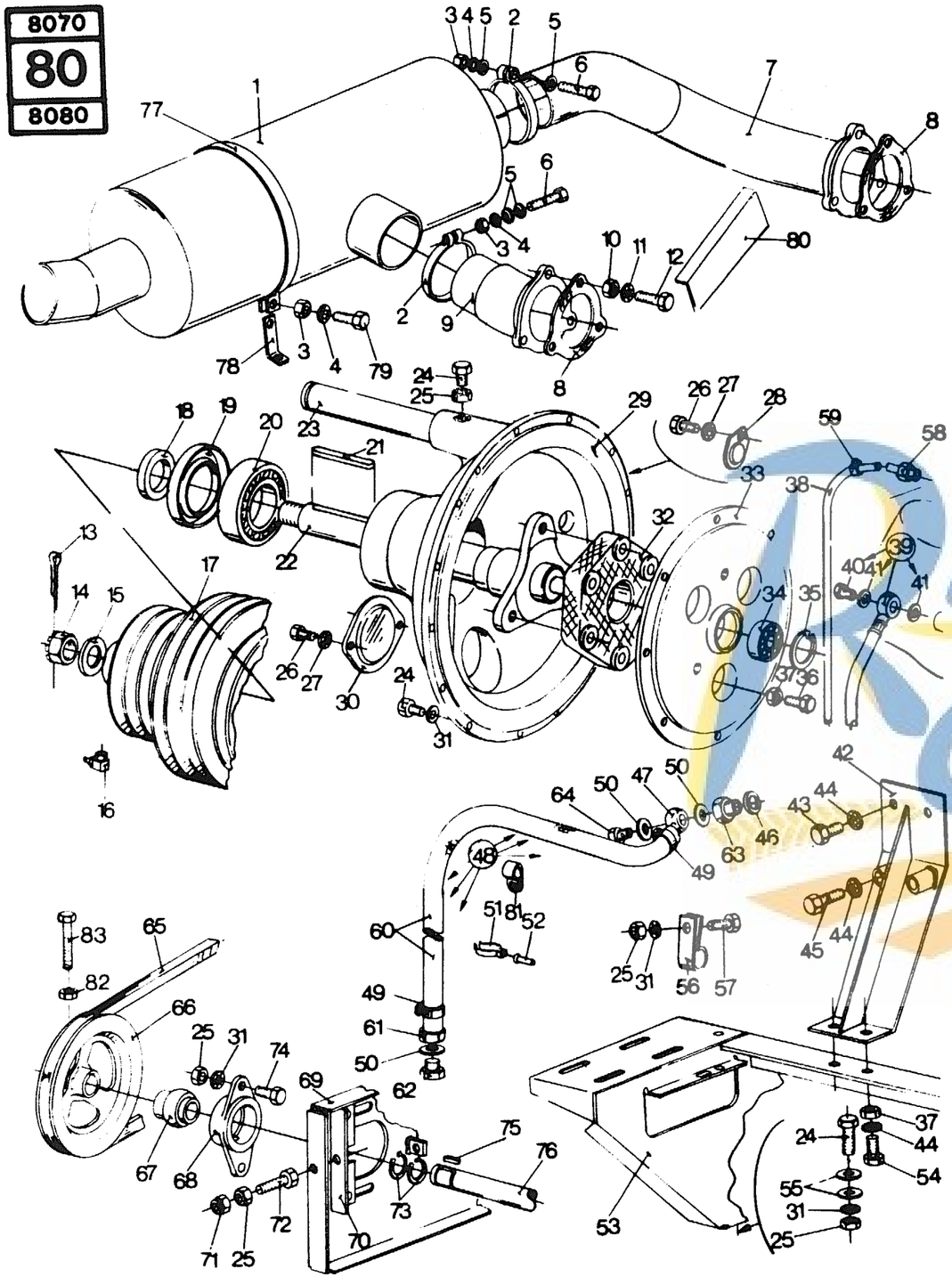

ATTACHING PARTS FOR MERCEDES OM 401 AND OM 421 ENGINES
ACCESSOIRES POUR MOTEUR MERCEDES OM 401 ET OM 421
ZUBEHÖR FÜR MERCEDES MOTOR OM 401 UND OM 421
ACCESSORI PER MOTORE MERCEDES, TIPO OM 401, TIPO OM 421
TOEBEHOREN VOOR MERCEDES MOTOR OM 401 EN OM 421

MODEL 8080

Fig.	Order Ref.	CD	8070	8080	Code	Description	N.B.
77	385963 0			1		Clamp	
78	399738 9			1		Bracket	
79	120106 5			1		Hex. cap screw	
80	420440 6			1		Guard	For OM 421 engine
81	418407 2			1		Clamp	
82	100037 4			1		Hex. lock nut	
83	120070 8			1		Hex. cap screw	

https://michelroger.be 180

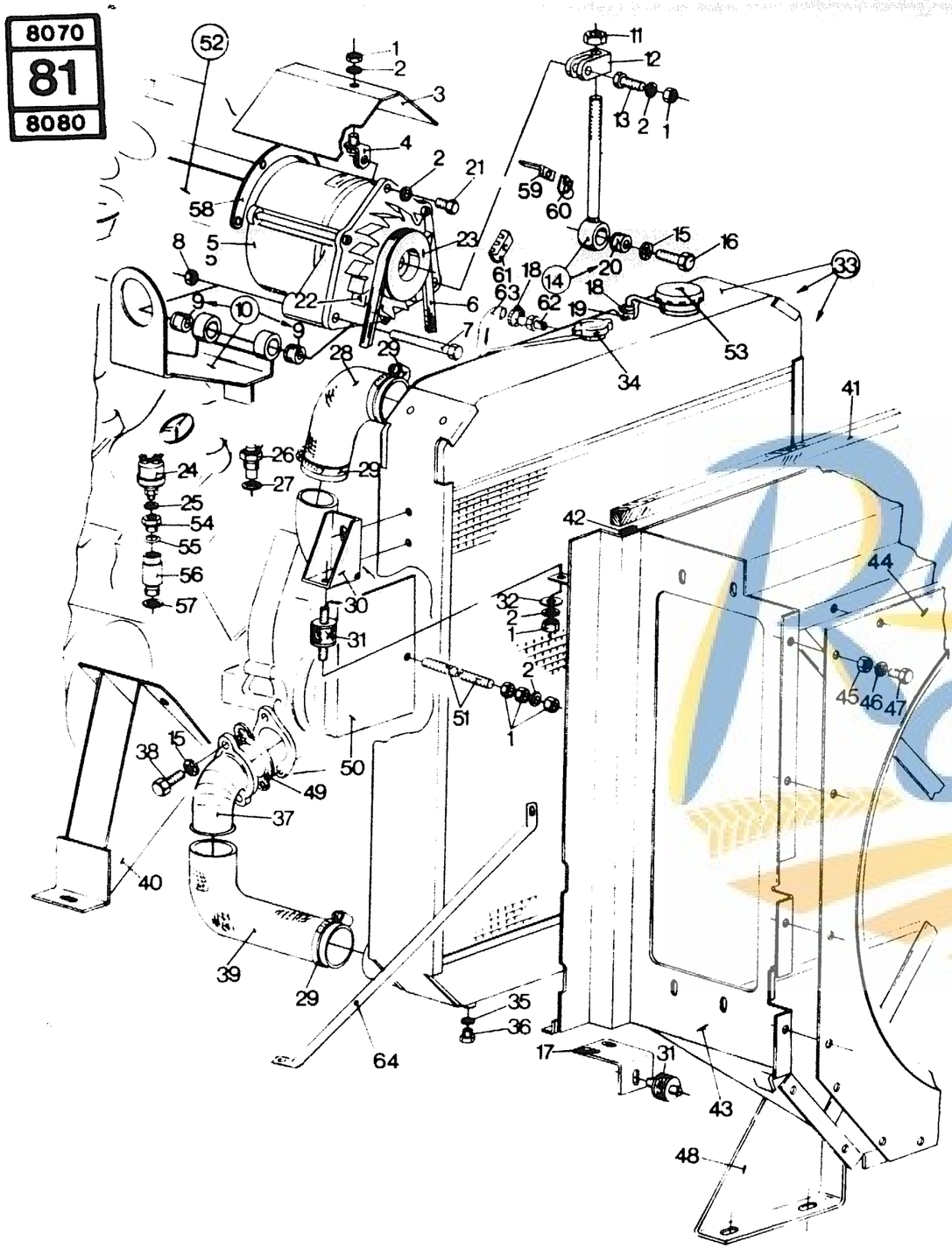

ATTACHING PARTS FOR MERCEDES OM 401 AND OM 421 ENGINES
ACCESSOIRES POUR MOTEUR MERCEDES OM 401 ET OM 421
ZUBEHÖR FÜR MERCEDES MOTOR OM 401 UND OM 421
ACCESSORI PER MOTORE MERCEDES, TIPO OM 401, TIPO OM 421
TOEBEHOREN VOOR MERCEDES OM 401 EN OM 421 MOTOR

MODEL 8080

Fig.	Order Ref.	CD	8070	8080	Code	Description		N.B.
1	100015 8		10			Hex. nut		
2	322358 2		10			Tooth lockwasher		
3	422892 5		1			Guard		
4	378075 8		1			Mounting bracket		
5	422746 6		1		334	Alternator assembly	1.4	25 ACR
	452309 6		1		44	Alternator assembly	1.4	65 Amp
6	432642 8		1			"V" belt	0.5	OM 421 engine
	393519 9		1		519	"V" belt		OM 401 engine
7	120060 7		1			Hex. cap screw		
8	412250 3		1			Hex. lock nut		
9	392385 3		2			Bushing		
10	422896 3		1			Support		Incl. fig. 9
11	396160 1		1			Lock nut		
12	396159 8		1			Clamp		
13	396161 3		1			Hex. cap screw		
14	422866 0		1			Eye bolt		Incl. fig. 20
15	140045 9		10			Tooth lockwasher		
16	120201 7		3			Hex. cap screw		
17	389215 9		1			Bracket		
18	326082 1		2			Hose clamp		
19	395748 6		1		329	Hose		
20	395826 2		1			Bushing		
21	120161 1		1			Hex. cap screw		
22	422769 4		1			Alternator fan	1.1	
23	422772 1		1			Pulley	1.4	
24	372045 9		1			Sender, Oil pressure		
25	220105 4		1			Seal washer	0.4	
26	354834 0		1			Sender, Water temperature		
27	220049 4		1			Seal washer		
28	420482 4		1		519	Radiator hose		OM 401 engine
	432639 1		1			Radiator hose		OM 421 engine
29	381145 2		4			Hose clamp		
30	388145 9		2			Radiator support		
31	393802 0		3			Shock absorber	0.5	
32	378243 5		10			Plain washer		
33	388060 9		1		519	Radiator assembly		Incl. figs. 34,35,36 and53 OM 401 engine
	418418 5		1			Radiator assembly	1.9	Incl. figs. 34,35,36 and 53 OM 421 engine
34	076896 3		1			Radiator cap	0.4	
35	220049 4		1			Seal washer		

https://michelroger.be 181

8070
81
8080

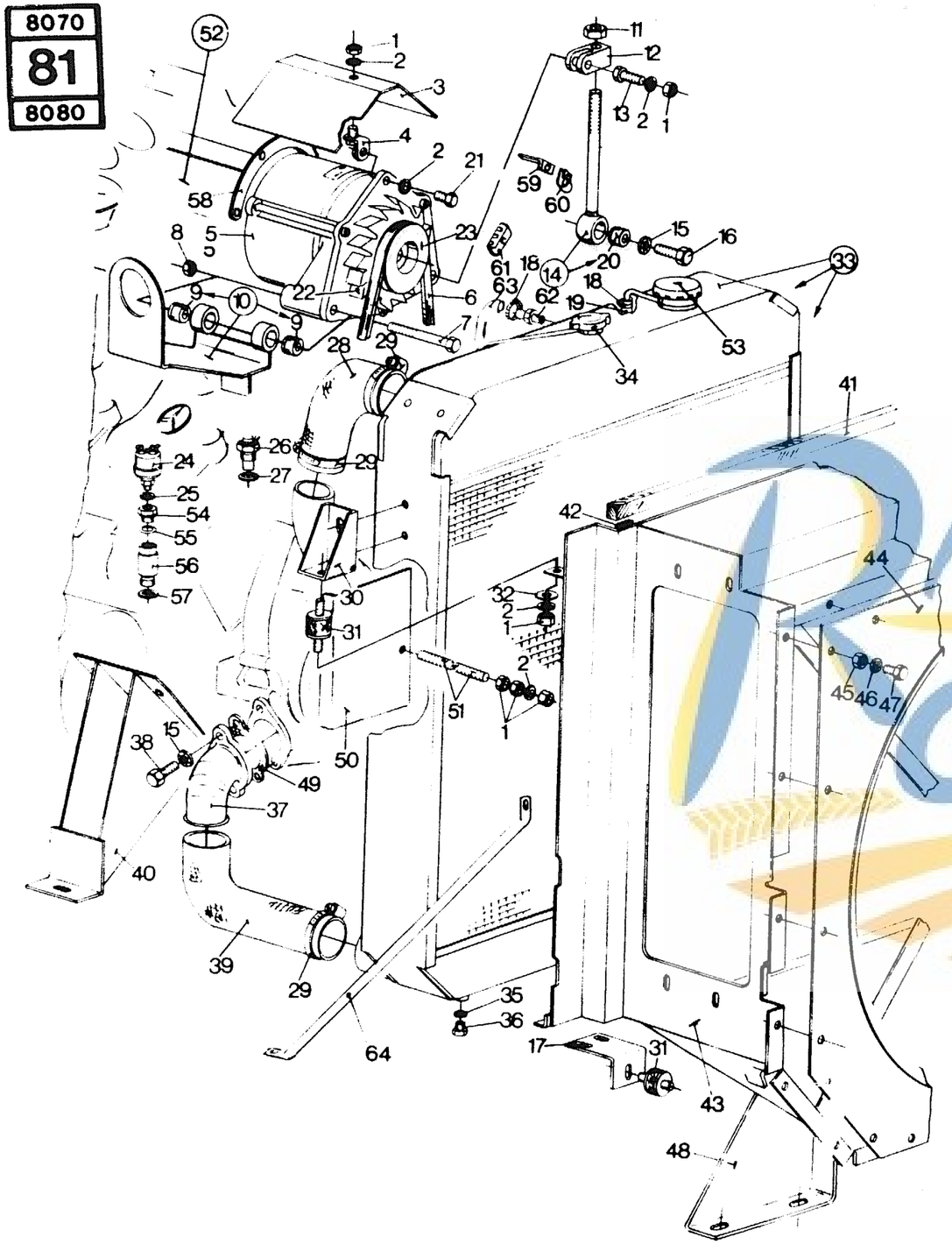

ATTACHING PARTS FOR MERCEDES OM 401 AND OM 421 ENGINES
ACCESSOIRES POUR MOTEUR MERCEDES OM 401 ET OM 421
ZUBEHÖR FÜR MERCEDES MOTOR OM 401 UND OM 421
ACCESSORI PER MOTORE MERCEDES, TIPO OM 401, TIPO OM 421
TOEBEHOREN VOOR MERCEDES OM 401 EN OM 421 MOTOR

MODEL 8080

Fig.	Order Ref.	CD	8070	8080	Code	Description	N.B.
36	395889 4		1			Drain plug	
37	388449 3		1			Sleeve	
38	120111 6		2			Hex. cap screw	
39	420483 6		1		519	Radiator hose	OM 401 engine
	432638 9		1			Radiator hose	OM 421 engine
40	388320 1		2			Engine support	
41	388143 5		2			Sealing strip	2.0
42	394734 6		2			Sealing strip	
43	424405 6		1			Radiator cowling	
44	388142 3		1			Plate	
45	100014 6		23			Hex. nut	
46	322357 0		31			Tooth lockwasher	
47	120099 8		28			Hex. cap screw	
48	417216 6		1			Radiator support	
49	398131 2		1			Gasket	
50	398448 3		1			Guard	
51	398819 0		1			Threaded rod	
52	316128 7		1		519	Engine assembly, Mercedes OM 401	
	317939 7		1			Engine assembly, Mercedes OM 421	15.0
53	398728 7		1		329	Radiator cap	
54	420146 2		1			Adapter	
55	220050 7		1			Seal washer	
56	420145 0		1			Connecting tube	
57	354977 2		1			Seal washer	
58	422895 1		1			Bracket	
59	395970 7		1			Bracket	
60	353072 3		1			Clamp	
61	379172 5		1			Cover	
62	446392 3		1		39	Connector	
63	448134 9		1		44	Hose	
64	456836 7		1			Brace	

https://michelroger.be

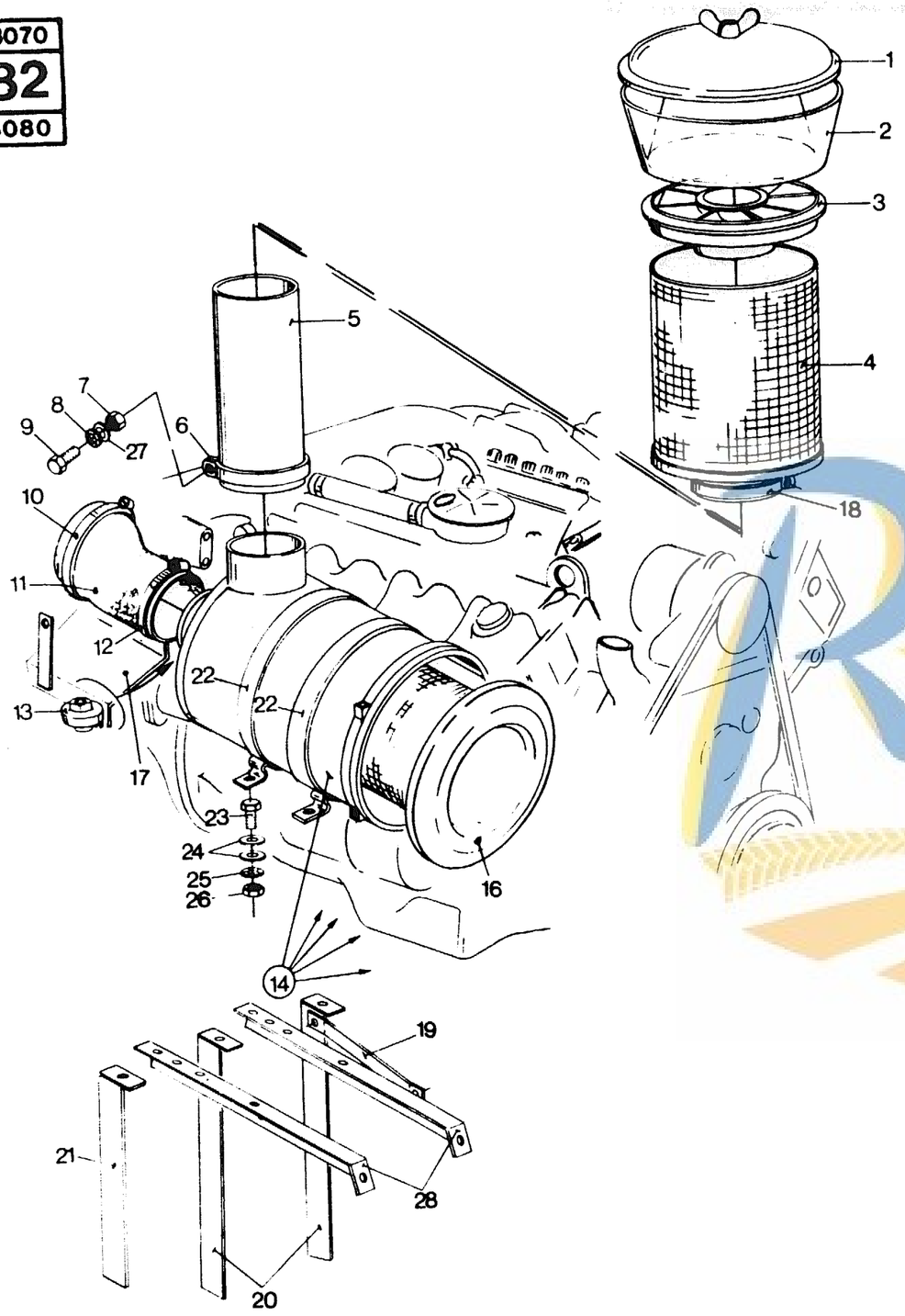

AIR FILTER
FILTRE A AIR
LUFTFILTER
FILTRO DELL'ARIA
LUCHTFILTER

MODEL 8080

Fig.	Order Ref.	CD	8070	8080	Code	Description	N.B.
1	065271 6			1	519	Cover	OM 401 engine
	418794 1			1		Cover	OM 421 engine
2	065273 0			1	519	Dust bowl	0.4 OM 401 engine
	418793 9			1		Dust bowl	OM 421 engine
3	065272 8			1	519	Sleeve assembly	OM 401 engine
	418792 7			1		Sleeve assembly	OM 421 engine
4	371883 4			1	519	Dust screen	0.5 OM 401 engine
	418966 6			1		Dust screen	OM 421 engine
5	396175 2			1	519	Tube, Air suction	OM 401 engine
	418970 5			1		Tube, Air suction	OM 421 engine
6	398710 0			1	519	Clamp	OM 401 engine
	418971 7			1		Clamp	OM 421 engine
7	100015 8			1		Hex. nut	
8	322358 2			1		Tooth lockwasher	
9	300510 0			1		Hex. cap screw	
10	337049 4			1		Hose clamp	
11	411570 0			1	519	Rubber hose	OM 401 engine
	418788 8			1		Rubber hose	OM 421 engine
12	064706 8			1	519	Hose clamp	OM 401 engine
	337049 4			1		Hose clamp	OM 421 engine
13	375644 2			1		Service indicator	0.4
14	398602 1			1	519	Air filter assembly	OM 401 engine Incl. fig. 16
	418787 6			1		Air filter assembly	OM 421 engine Incl. fig. 16
16	399053 7			1	519	Filter element	OM 401 engine
	418795 3			1		Filter element	OM 421 engine
17	424076 7			1	519	Guard	OM 401 and OM 421 engine
18	418969 2			1		Clamp	OM 421 engine
19	411903 7			1	330	Brace	
20	398133 6			2		Support	
21	427232 2			1		Support	
22	411341 5			2	519	Clamp	OM 401 engine
	418785 2			2		Clamp	OM 421 engine
23	120119 2			4		Hex. cap screw	
24	378245 9			4		Plain washer	
25	140046 1			4		Tooth lockwasher	
26	337475 7			4		Hex. nut	
27	378243 5			1		Plain washer	
28	398135 0			2	519	Support	OM 401 engine
	418975 5			2		Support	OM 421 engine

https://michelroger.be 183

300

THROTTLE CONTROL FOR MERCEDES OM 401 AND OM 421 ENGINES
MANETTE DE COMMANDE DES GAZ POUR MOTEURS MERCEDES OM 401 ET OM 421
GASHANDHEBEL MERCEDES MOTOREN OM 401 UND OM 421
MANOPOLA COMANDO ACCELARATORE, MOTORI MERCEDES TIPO OM 401 E OM 421
GASHANDGREEP MERCEDES MOTOREN OM 401 EN OM 421

MODEL 8080

Fig.	Order Ref.	CD	8070	8080	Code	Description	N.B
1	120104 1			4		Hex. cap screw	
2	322358 2			4		Tooth lockwasher	
3	100015 8			8		Hex. nut	
4	399194 5			2		Hinge	
5	130002 7			1		Cotter pin	
6	412152 5			6		Hex. lock nut	
7	120242 3			1		Screw	
8	**750620 7**			1		Adjusting screw	
9	434707 8			1		Adjusting rod	
10	437354 2			1		Lever	
11	390897 6			1		Knob	
12	395458 1			1		Knob	
13	432017 3			1		Lever	
14	100014 6			15		Hex. nut	
15	322357 0			19		Tooth lockwasher	
16	120099 8			13		Hex. cap screw	
17	485978 2			1		Spring plate	
18	435485 7			1		Hinge w/a	
19	417154 4			1		Clevis clip	
20	412012 9			1		Yoke	
21	432756 9			1		Flange, Ball hinge	
22	367308 0			1		Clip, Rod end	
23	435913 6			1		Adjusting rod	
24	397543 4			1		Bracket	
25	432773 5			1		Cable	1.4
26	436709 4			1		Support tube w/a	
27	100100 9			4		Hex. cap screw	
28	350186 1			3		Ball hinge	Incl. fig. 14
29	100016 0			1		Hex. nut	
30	378244 7			2		Plain washer	
31	392291 4			1		Lever	
32	393870 3			1		Lever support	
33	**853488 9**			1		Spring	
34	120110 4			2		Hex. cap screw	
35	140045 9			2		Tooth lockwasher	
36	399637 5			1		Adjusting rod	
37	389205 8			1		Bracket	
38	370647 3			1		Hook	
39	353369 2			1		Cable holder	
40	484361 4			1		Clamp	
41	389204 6			1		Support	
42	323597 9			2		Cable strap	
43	180037 0			1	326	Spring	
	000015 7			1	36	Spring	

https://michelroger.be 184

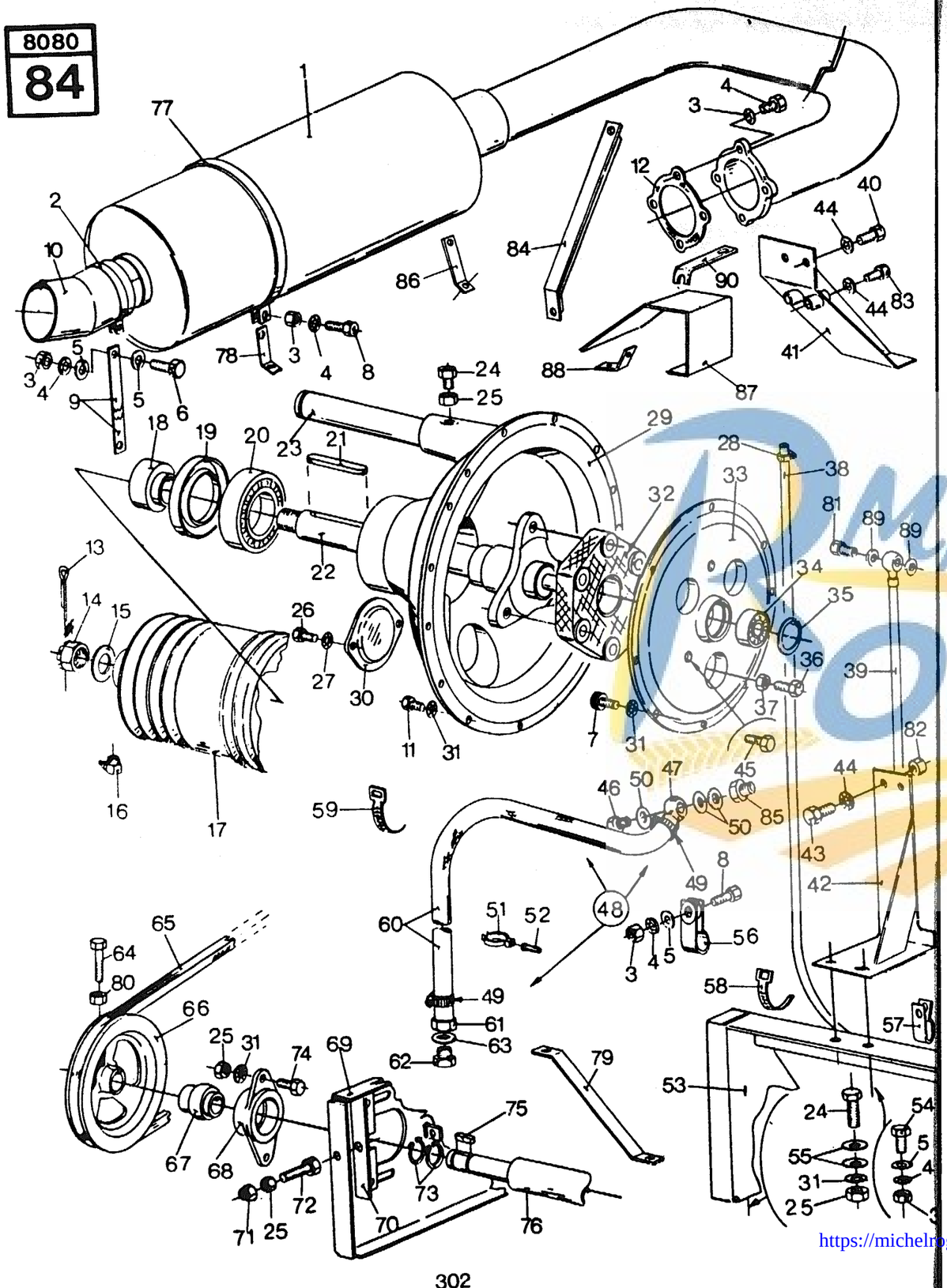

302

ATTACHING PARTS FOR FIAT 8361 SI — 8361 SI-10
ACCESSOIRES POUR MOTEUR FIAT 8361 SI — 8361 SI-10
ZUBEHÖR FÜR FIAT MOTOR 8361 SI — 8361 SI-10
ACCESSORI PER MOTORE FIAT 8361 SI — 8361 SI-10
TOEBEHOREN VOOR FIAT 8361 SI — 8361 SI-10

MODEL 8080

Fig.	Order Ref.	CD	8070	8080	Code	Description	N.B.	
1	433758	4		1	611	Silencer	1.1	
	918525	7		1	56	Silencer		
2	354821	3		1		Clamp		
3	100015	8		2		Hex. nut		
4	322358	2		4		Tooth lockwasher		
5	378243	5		2		Plain washer		
6	300510	0		1		Hex. cap screw		
7	412159	9		8		Hex. cap screw		
8	120161	1		1		Hex. cap screw		
9	417623	9		1	611	Support		
	918394	8		1	56	Support		
10	433756	0		1	611	Exhaust pipe	0.5	
	918622	3		1	56	Exhaust pipe		
11	412160	2		12		Hex. cap screw		
12	433325	7		1		Gasket		
13	130016	6		1		Washer		
14	390822	9		1		Castle nut	1.1	
15	140116	0		1		Washer		
16	323713	7		1		Grease fitting		
17	410671	3		1		Pulley, Main drive		Mechanical drive
18	410668	6		1		Collar	4.0	
19	387761	4		1		Grease seal		
20	387760	2		1		Bearing	4.2	Mechanical drive
21	306248	9		1		Flat key		
22	427226	9		1		Shaft, Engine tail	10.1	
23	389796	9		1		Shaft	1.5	
24	120110	4		6		Hex. cap screw		
25	100016	0		1		Hex. nut		
26	120099	8		8		Hex. cap screw		
27	322357	0		8		Tooth lockwasher		
28	150064	1		2		Clamp	0.7	
29	427178	6		1		Engine flange	5.5	
30	378663	5		3		Cover		
31	140045	9		16		Tooth lockwasher		
32	385985	6		1		Flexible coupling	10.1	
33	427210	6		1		Flange		
34	034439	5		1		Bearing	9.9	
35	370011	6		1		Circlip	6.4	
36	120091	2		3		Hex. cap screw		
37	100020	9		3		Hex. nut		
38	160111	4		1		Pipe, Fuel oil		
39	436836	3		1		Pipe, Fuel oil (suction)	1.0	
40	412211	1		6		Hex. cap screw		
41	427929	9		1		Engine support		

https://michelroger.be 185

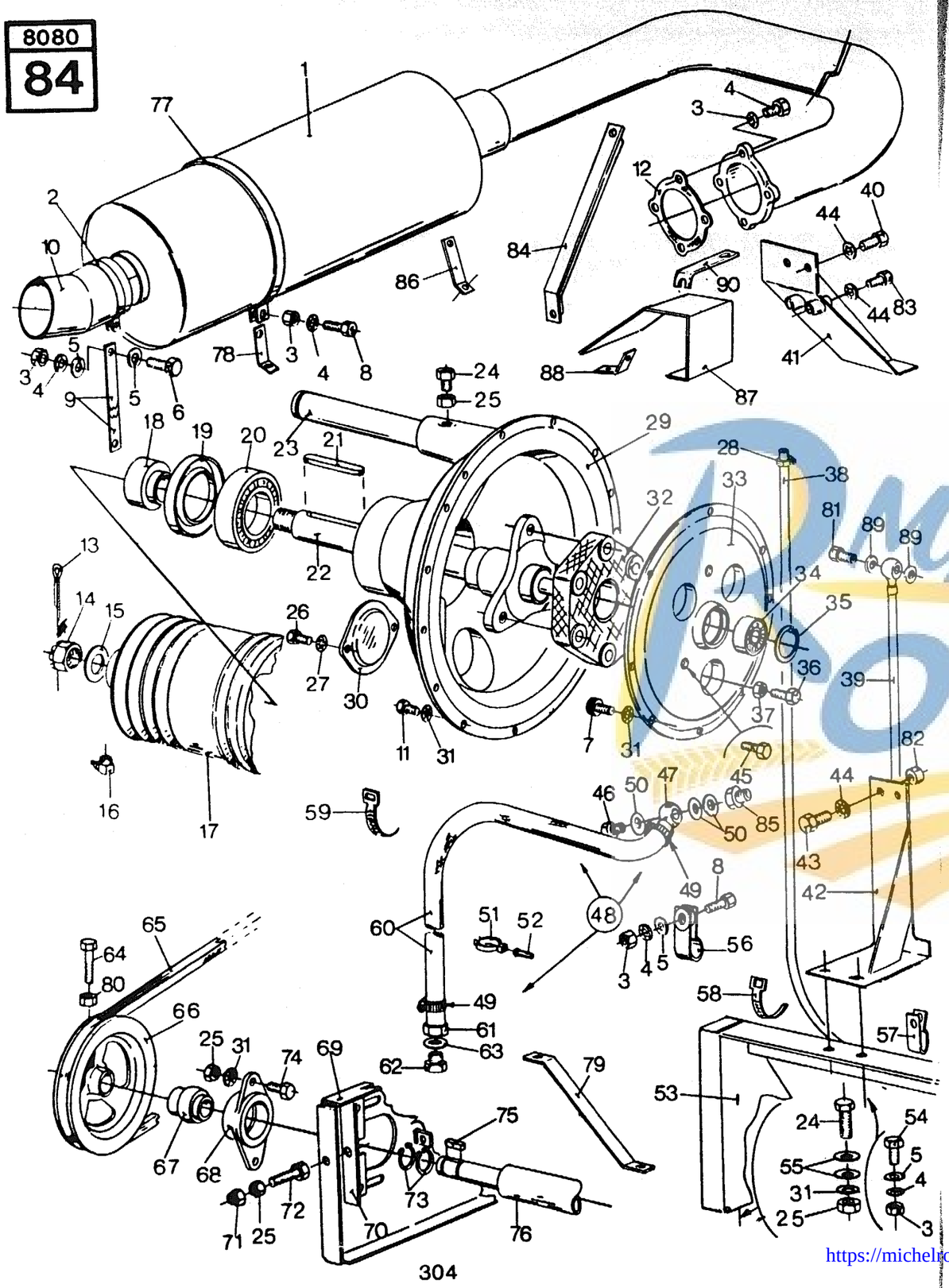

304

ATTACHING PARTS FOR FIAT 8361 SI — 8361 SI-10
ACCESSOIRES POUR MOTEUR FIAT 8361 SI — 8361 SI-10
ZUBEHÖR FÜR FIAT MOTOR 8361 SI — 8361 SI-10
ACCESSORI PER MOTORE FIAT 8361 SI — 8361 SI-10
TOEBEHOREN VOOR FIAT 8361 SI — 8361 SI-10

MODEL 8080

Fig.	Order Ref.	CD	8070	8080	Code	Description	N.B.
42	431368	5		1	330	Engine support	
	447340	5		1	40	Engine support	
43	412037	1		4		Hex. cap screw	
44	140046	1		10		Tooth lockwasher	
45	385923	6		3		Hex. cap screw	
46	120258	6		2		Hollow screw	
47	326078	2		1		Banjo connector	
48	419448	9		1		Hose assy, Oil drain	Incl. figs. 47, 49, 60, 61, 62 & 63
49	326082	1		2		Hose clamp	0.7
50	220122	0		5		Seal washer	
51	326080	7		2		Spring clip	
52	130065	9		2		Rivet	
53	417216	6		1		Engine support, RH	
	398137	4		1		Engine support, LH	
54	120104	1		2		Hex. cap screw	
55	378244	7		10		Plain washer	
56	431352	2		1		Clamp	
57	431351	0		4		Clamp	
58	323597	9		3		Cable strap	
59	418407	2		2		Cable strap	
60	419447	7		1		Hose, Oil drain	
61	326079	4		1		Adapter	
62	150060	3		1		Plug	
63	220122	0		1		Seal washer	
64	120070	8		1		Hex. cap screw	
65	389245	2		1		"V" belt	0.7
66	425909	5		1		Pulley	1.0
67	325110	1		1		Bearing	1.7
68	386537	8		1		Bearing housing	
69	397470	9		1		Support	
70	397465	8		1		Adjusting bracket	
71	412141	2		1		Hex. lock nut	
72	360296	6		1		Hex. cap screw	
73	370003	9		6		Circlip	1.0
74	120201	7		2		Hex. cap screw	
75	170030	4		1		Flat key	1.0
76	426801	8		1		Shaft	
77	444009	0		1		Clamp	
78	419450	4		1	609	Support	
	748271	2		1	51	Support	
79	424320	6		1		Support	
80	1000374			1		Hex. lock nut	

https://michelroger.be

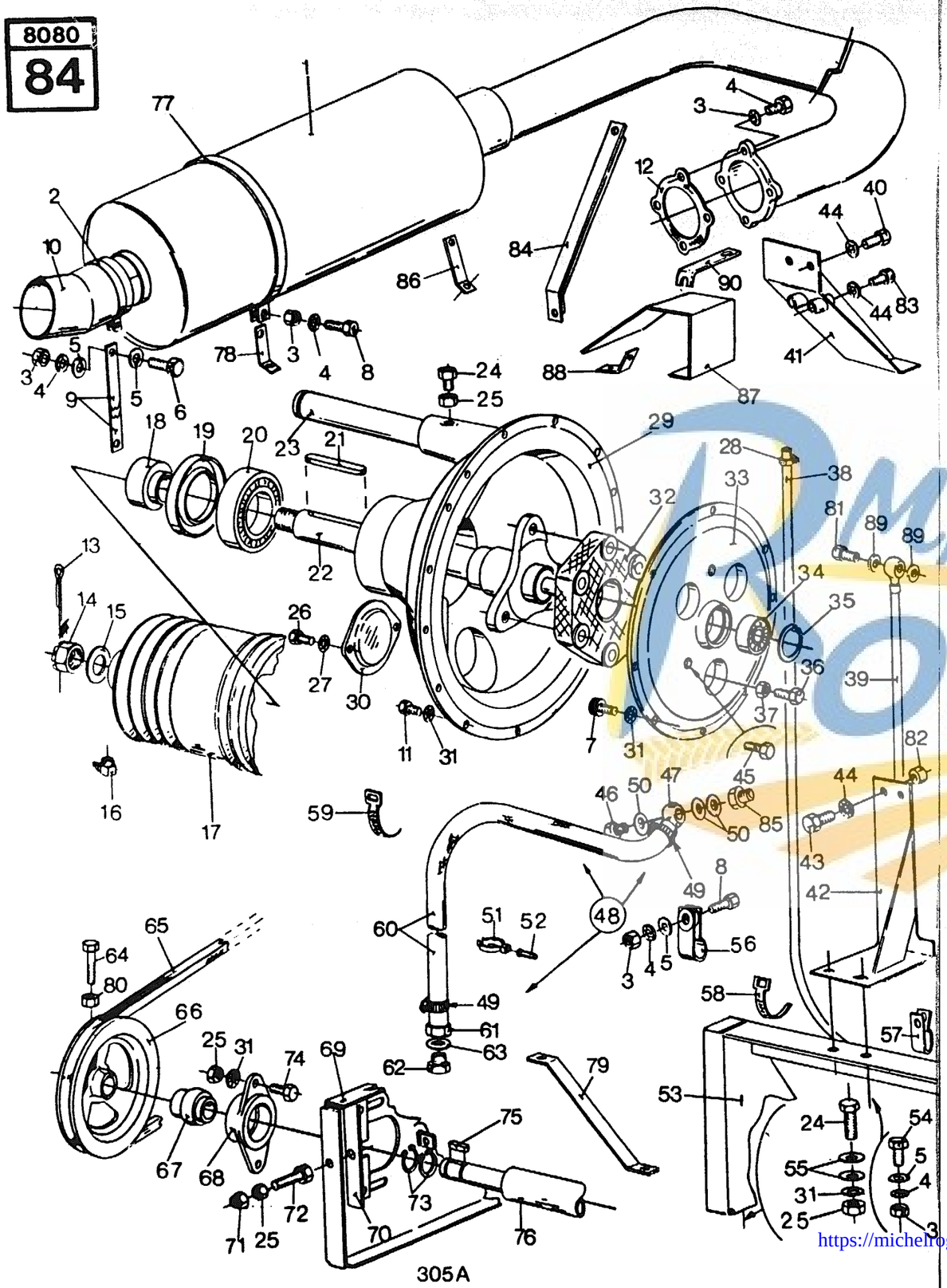

305 A

ATTACHING PARTS FOR FIAT 8361 SI – 8361 SI-10
ACCESSOIRES POUR MOTEUR FIAT 8361 SI – 8361 SI-10
ZUBEHÖR FÜR FIAT MOTOR 8361 SI – 8361 SI-10
ACCESSORI PER MOTORE FIAT 8361 SI – 8361 SI-10
TOEBEHOREN VOOR FIAT 8361 SI – 8361 SI-10

MODEL 8080

Fig.	Order Ref.	CD	8070	8080	Code	Description	N.B
81	354969 5			1		Hollow screw	
82	301663 4			4		Bushing	
83	412163 8			2		Hex. cap screw	
84	433755 8			1	615	Support	
	922659 6			1	57	Support	
85	441465 3			1		Adapter	
86	451691 4			1	611	Bracket	
	748272 4			1	616	Bracket	
	922660 9			1	57	Bracket	
87	448366 0			1		Guard	
88	916265 3			1	56	Bracket	
89	922246 1			2	56	Seal washer	
90	916264 1			1	615	Support	
	922660 9			1	57	Support	

MICHEL ROGER
https://michelroger.be

Michel ROGER GROUP

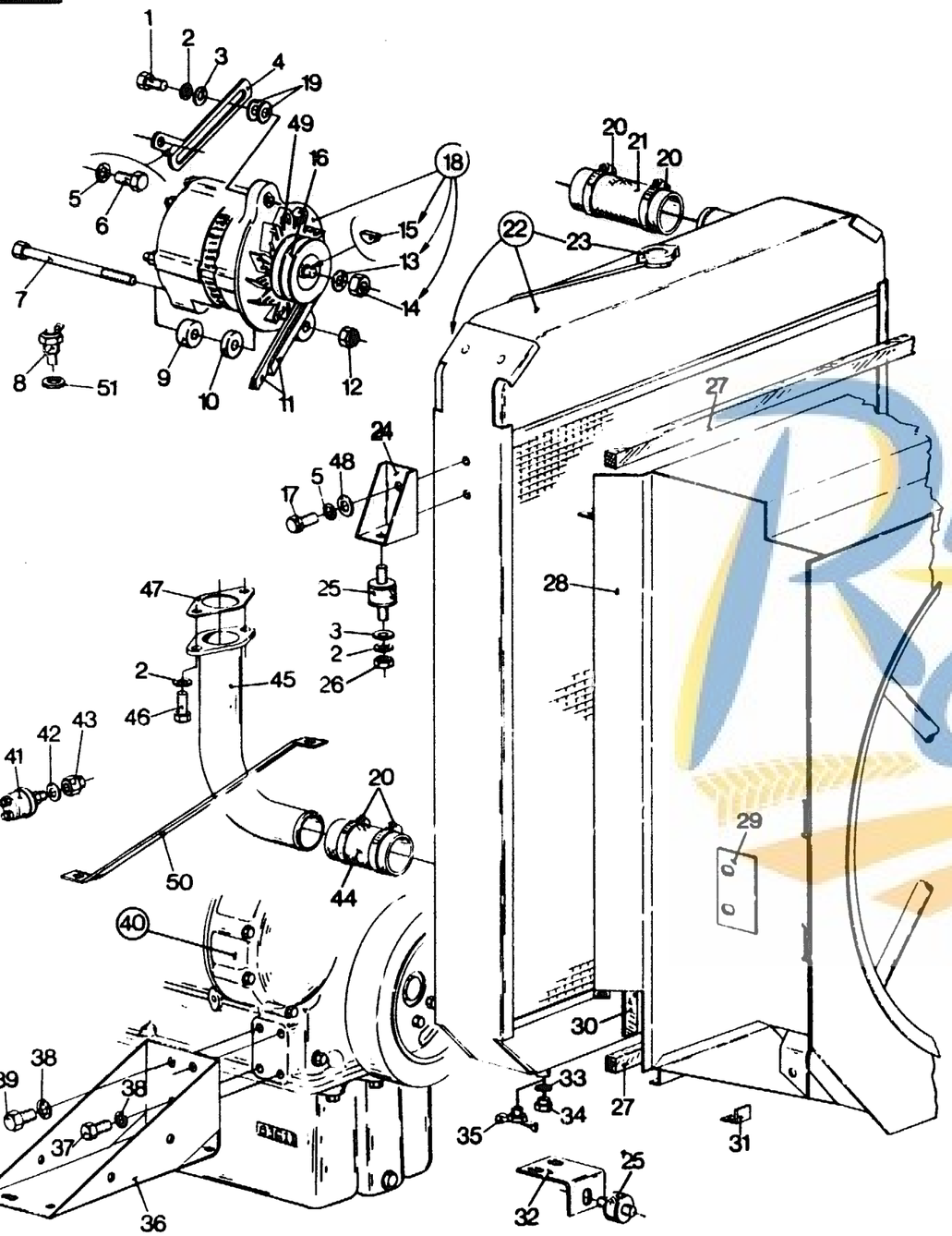

ATTACHING PARTS FOR FIAT 8361 SI — 8361 SI-10
ACCESSOIRES POUR MOTEUR FIAT 8361 SI — 8361 SI-10
ZUBEHÖR FÜR FIATMOTOR 8361 SI — 8361 SI-10
ACCESSORI PER MOTORE FIAT 8361 SI — 8361 SI-10
TOEBEHOREN VOOR FIAT 8361 SI — 8361 SI-10

MODEL 8080

Fig.	Order Ref.	CD	8070	8080	Code	Description		N.B.
1	120161	1		1		Hex. cap screw		
2	322358	2		1		Tooth lockwasher		
3	378243	5		1		Plain washer		
4	411479	6		1		Support		
5	140045	9		1		Tooth lockwasher		
6	412158	7		1		Hex. cap screw		
7	381522	2		1		Hex. cap screw		
8	427580	9		1		Sender, Water temperature		
9	427833	6		1		Spacer		
10	427834	8		1		Spacer		
11	436304	6		1	611	"V" belt (Set of 2)	0.7	
	381236	5		1	56	"V" belt (Set of 2)		
12	412250	3		1		Hex. lock nut		
13	140047	3		1		Tooth lockwasher		
14	100064	1		1		Hex. nut		
15	080496	1		1		Woodruff key		
16	436320	0		1	611	Pulley	1.4	
	916250	2		1	56	Pulley		
17	300383	9		4		Hex. cap screw		
18	422746	6		1	334	Alternator assembly	1.4	Incl. figs.13,14,15 and 49
	452309	6		1	44	Alternator assembly	1.4	Incl. figs.13,14,15 and 49
19	200203	8		1		Bushing		
20	360747	3		4		Hose clamp		
21	431911	8		1		Radiator hose		
22	427577	2		1		Radiator assembly	1.9	Incl.figs.23,33,34 or 23,35
23	076896	3		1		Radiator cap	0.4	
24	388145	9		2		Radiator support		
25	393802	0		3		Shock absorber	0.5	
26	100015	8		4		Hex. nut		
27	388143	5		2		Sealing strip	2.0	
28	428051	9		1		Radiator cowling		Mechanical drive
29	430606	0		1		Plate		Mechanical drive
30	394734	6		2		Sealing strip	2.0	
31	399955	9		1		Bracket		Mechanical drive
32	389215	9		1		Bracket		
33	220049	4		1		Seal washer		
34	395889	4		1		Plug		
35	350187	3		1		Drain cock		
36	427972	0		1		Engine support, LH		
	427970	6		1		Engine support, RH		
37	412211	1		4		Hex. cap screw		
38	140048	5		8		Tooth lockwasher		

https://michelroger.be 189

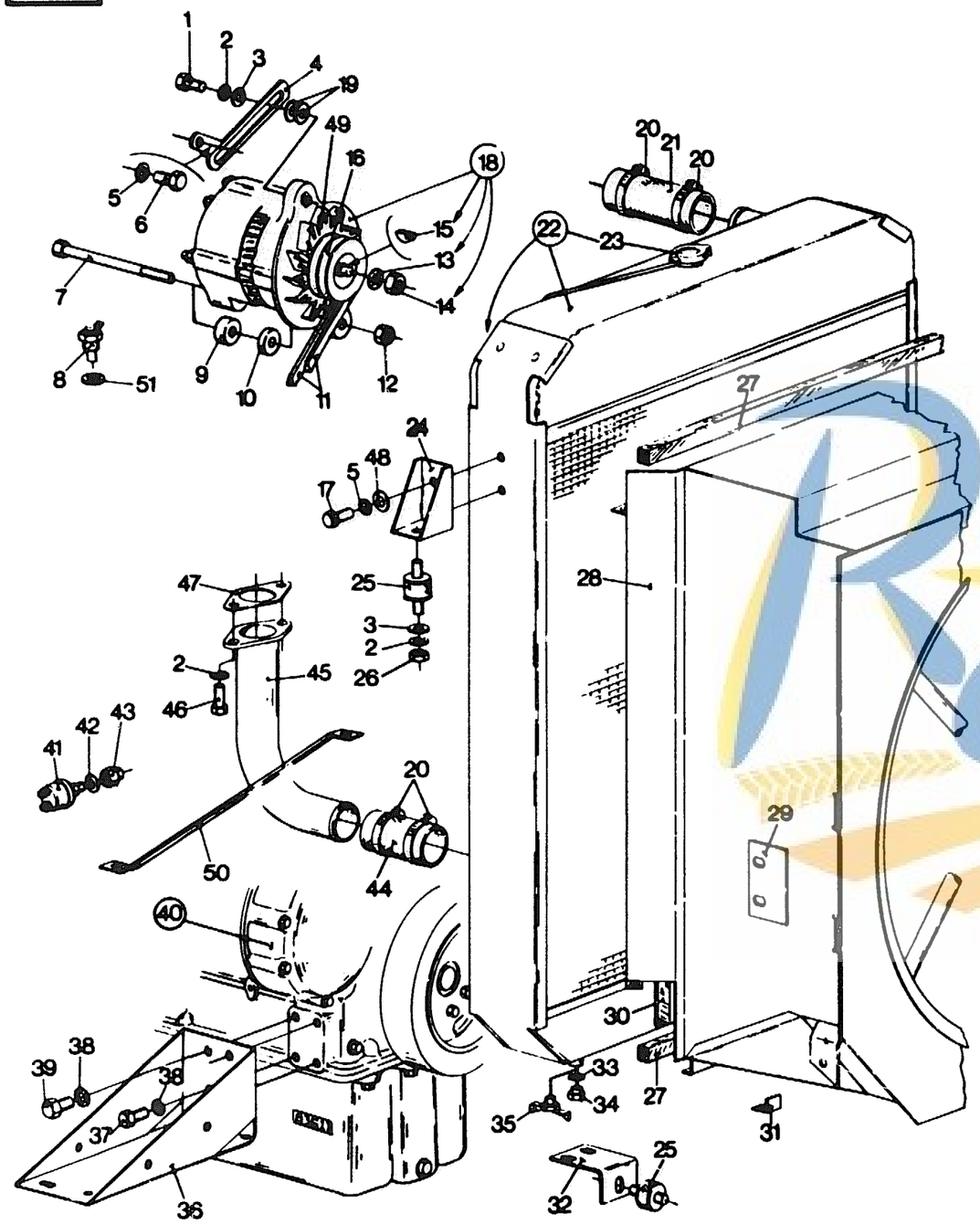

ATTACHING PARTS FOR FIAT 8361 SI — 8361 SI-10
ACCESSOIRES POUR MOTEUR FIAT 8361 SI — 8361 SI-10
ZUBEHÖR FÜR FIAT MOTOR 8361 SI — 8361 SI-10
ACCESSORI PER MOTORE FIAT 8361 Si — 8361 SI-10
TOEBEHOREN VOOR FIAT 8361 SI — 8361 SI-10

MODEL 8080

Fig.	Order Ref.	CD	8070	8080	Code	Description	N.B.
39	412212	3		4		Hex. cap screw	
40	317784	8		1	611	Engine assembly, Fiat 8361 SI	15.0
	742042	0		1	56	Engine assembly, Fiat 8361 SI-10	
41	372045	9		1		Sender, Oil pressure	0.4
42	220105	4		1		Seal washer	
43	429378	2		1		Adapter	
44	431912	0		1		Radiator hose	
45	427832	4		1		Tube	
46	120104	1		2		Hex. cap screw	
47	427829	7		1		Gasket	
48	378244	7		2		Plain washer	
49	422769	4		1		Alternator fan	
50	457046	3		1	44	Brace	
51	220022	8		1	44	Seal washer	

Michel ROGER

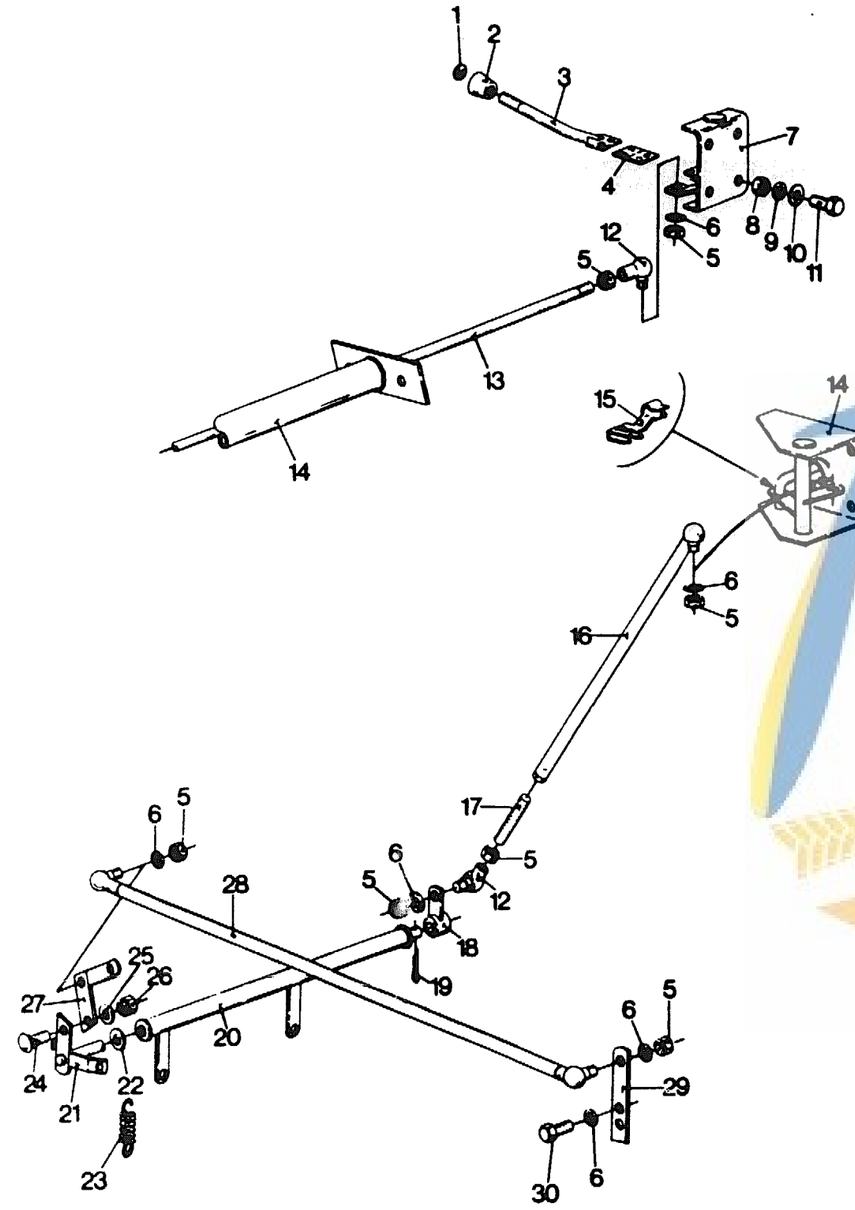

THROTTLE CONTROL FIAT TYPE 8361 SI — 8361 SI-10
MANETTE DE COMMANDE DES GAZ FIAT TYPE 8361 SI — 8361 SI-10
GASHANDHEBEL FIAT TYP 8361 SI — 8361 SI-10
MANOPOLA COMANDO ECCELERATORE, MOTORE FIAT TIPO 8361 SI — 8361 SI-10
GASHANDGREEP FIAT TYPE 8361 SI — 8361 SI-10

MODEL 8080

Fig.	Order Ref.	CD	8070	8080	Code	Description	N.B.
1	410223	4		1		Decal	
2	390897	6		1		Knob	
3	432017	3		1		Lever	
4	485978	2		1		Spring plate	
5	100014	6		10		Hex. nut	
6	322357	0		15		Tooth lockwasher	
7	432490	5		1		Hinge w/a	
8	100015	8		6		Hex. nut	
9	322358	2		6		Tooth lockwasher	
10	378243	5		4		Plain washer	
11	120104	1		6		Hex. cap screw	
12	350186	1		2		Ball hinge	
13	432023	6		1		Adjusting rod	
14	435372	8		1		Support tube w/a	
15	367308	0		1		Clip, Rod end	
16	362502	7		1		Adjusting rod	
17	332198	4		1		Threaded rod	
18	334713	0		1		Lever	
19	130043	3		1		Roll pin	
20	431364	7		1	611	Support tube	
	918623	5		1	56	Support tube	
21	432492	9		1		Lever	
22	378245	9		1		Plain washer	
23	000016	9		1		Spring	
24	120245	9		1		Carriage bolt	
25	378244	7		1		Plain washer	
26	100037	4		1		Hex. lock nut	
27	422175	5		1		Lever	
28	427503	7		1	611	Connecting rod	
	918624	7		1	56	Connecting rod	
29	354013	0		1	611	Lever	
	389205	8		1	56	Lever	
30	120099	8		10		Hex. cap screw	

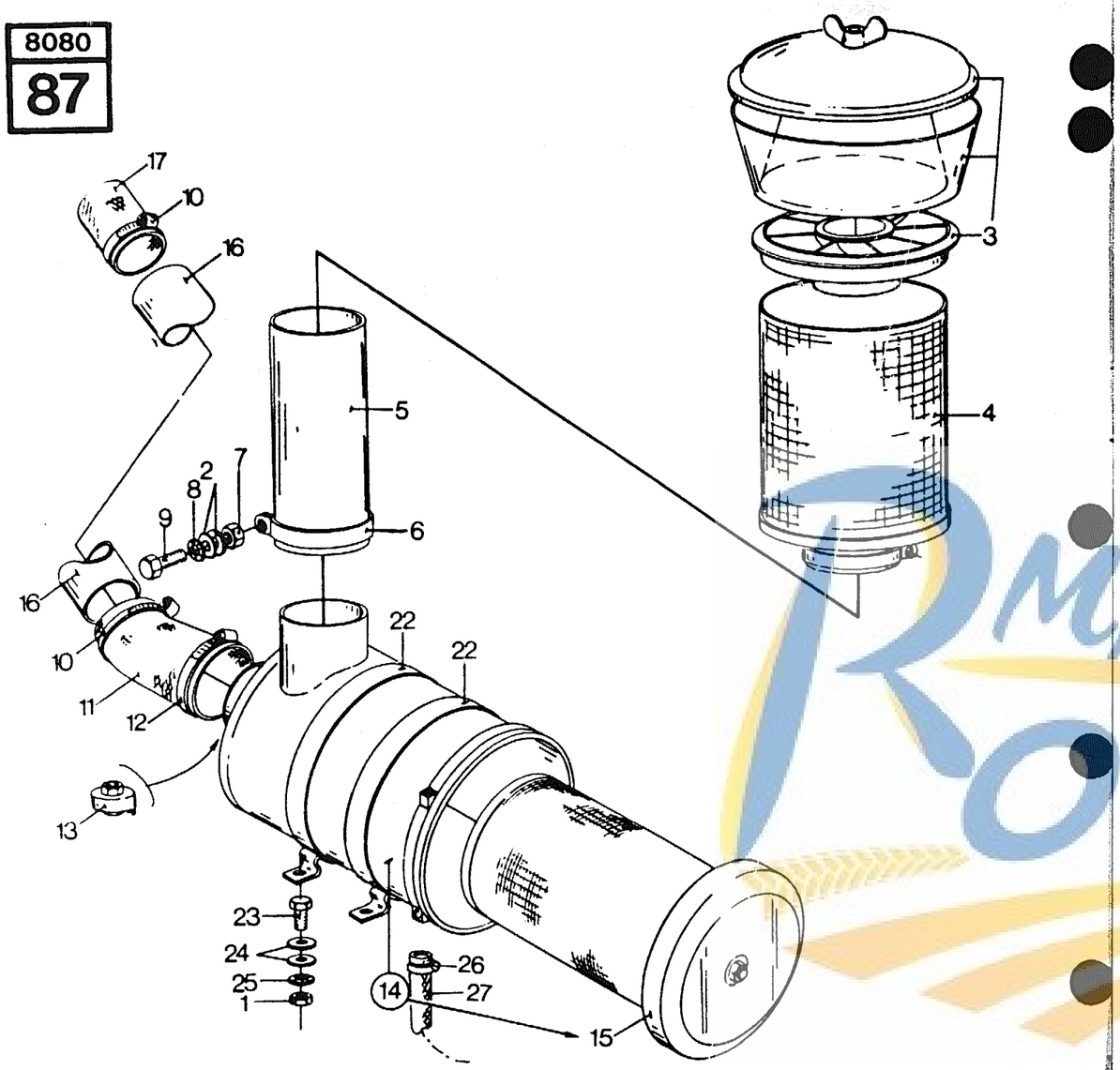

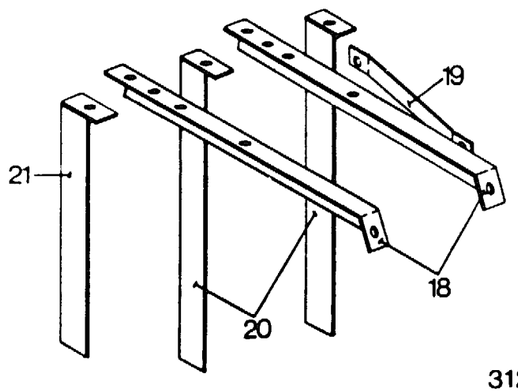

AIR FILTER
FILTRE A AIR
LUFTFILTER
FILTRO DELL'ARIA
LUCHTFILTER

FIAT ENGINE 8361 SI
8361 SI-10
MODEL 8080

Fig.	Order Ref.	CD	8070	8080	Code	Description		N.B
1	3374575	7		1		Hex. nut	0.4	
2	378243	5		2		Plain washer		
3	441072	0		1	611	Sleeve assembly	0.5	
4	371883	4		1	611	Dust screen		
	913355	1		1	55	Dust screen		
5	396175	2		1	611	Tube, Air suction		
6	398710	0		1	611	Clamp		
7	100015	8		1		Hex. nut		
8	322358	2		5		Tooth lockwasher		
9	120062	1		1		Hex. cap screw		
10	419950	4		3		Hose clamp		
11	433318	2		1		Rubber hose		
12	064706	8		1		Hose clamp		
13	375644	2		1		Service indicator	0.4	
14	398602	1		1	611	Air filter assembly		Incl. fig. 15
	913354	9		1	55	Air filter assembly		
15	399053	7		1	611	Filter element		
	919341	8		1	55	Filter element		
16	436778	9		1		Tube		
17	433317	0		1		Rubber hose		
18	398135	0		1		Support		
19	411903	7		1		Support		
20	398133	6		2	519	Support		
	743655	1		2	48	Support		
21	427232	2		1		Support		
22	411341	5		2	611	Clamp		
	379985	8		2	55	Clamp		
23	120119	2		4		Hex. cap screw		
24	378245	9		4		Plain washer		
25	140046	1		4		Tooth lockwasher		
26	382528	5		2	55	Clamp		
27	918634	8		1	55	Rubber hose		

https://michelroger.be 192

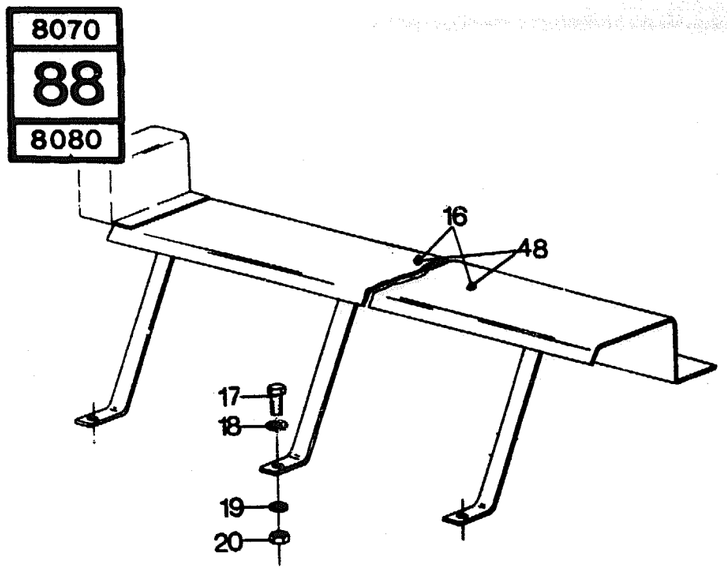

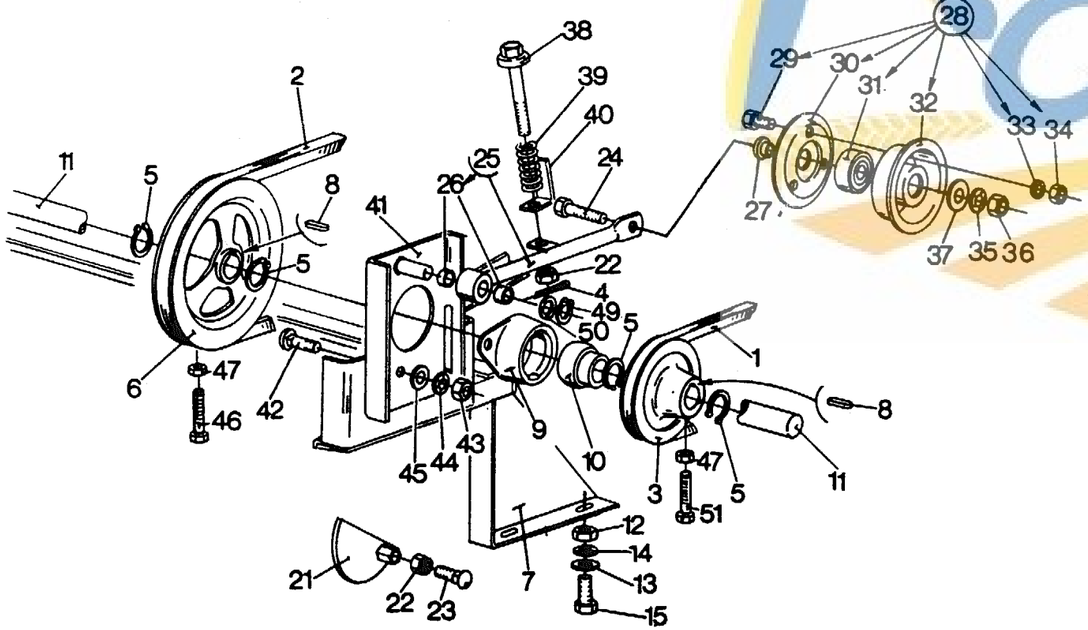

ROTARY DUST SCREEN DRIVE
COMMANDE DE LA PRISE D'AIR ROTATIVE
ANTRIEB DES ROTIERENDEN KÜHLERSIEBES
COMANDO DELLA COPERTURA ANTIPOLVERE ROTANTE
AANDRIJVING ROTERENDE STOPKAP

MODEL 8070 - 8080

Fig.	Order Ref.	CD	8070	8080	Code	Description		N.B.
1	381489	0	1	1		"V" belt	1.5	
2	384397	8	1	1		"V" belt	2.2	Ford and Mercedes engines
	420349	2	1			"V" belt	4.2	Fiat engine
3	426061	8		1		Pulley	1.5	
4	130008	9		1	334	Cotter pin		
5	370003	9		4		Circlip		
6	425910	8	1	1		Pulley		Mercedes engine
	427921	3		1		Pulley	2.5	Mercedes OM 421 engine
	426214	3	1			Pulley		Fiat engine
7	398137	4		1		Support		
	432029	8	1			Support		Ford & Mercedes engines
	432029	8	1			Support		Fiat engine
8	170008	7	1	1		Flat key	1.5	
9	386537	8	1	1		Bearing housing	1.9	
10	325110	1	1	1		Ball bearing		
11	426801	8	1	1		Shaft	4.1	
12	100016	0	10	10		Hex. nut		
13	378244	7	10	10		Plain washer		
14	140045	9	10	10		Tooth lockwasher		
15	120111	6	2	2		Hex. cap screw		
16	426732	1	1		492	Guard		
	426732	1		1	330	Guard		
17	300506	1	3	3		Hex. cap screw		
18	140015	6	7	7		Plain washer		
19	322357	0	31	31		Tooth lockwasher		
20	100014	6	23	23		Hex. nut		
21	388412	6	1	1		Eccentric		
22	412141	2	2	2		Hex. lock nut		
23	374892	6	1	1		Carriage bolt		
24	120082	3	1	1		Hex. cap screw		
25	398089	1	1	1		Idler arm		Incl. fig. 26
26	210024	0	1	1		Bushing		
27	333235	5	1	1		Bushing		
28	030193	9	1	1		Pulley assembly	1.1	Incl. figs. 29 to 34
29	321803	6	3	3		Machine screw		
30	290112	3	1	1		Idler half	1.3	
31	034439	5	1	1		Ball bearing		
32	290114	7	1	1		Idler half		
33	322355	6	3	3		Tooth lockwasher		
34	100012	2	3	3		Hex. nut		
35	140046	1	19	19		Tooth lockwasher		
36	337475	7	11	11		Hex. nut		

https://michelroger.be 193

8070
88
8080

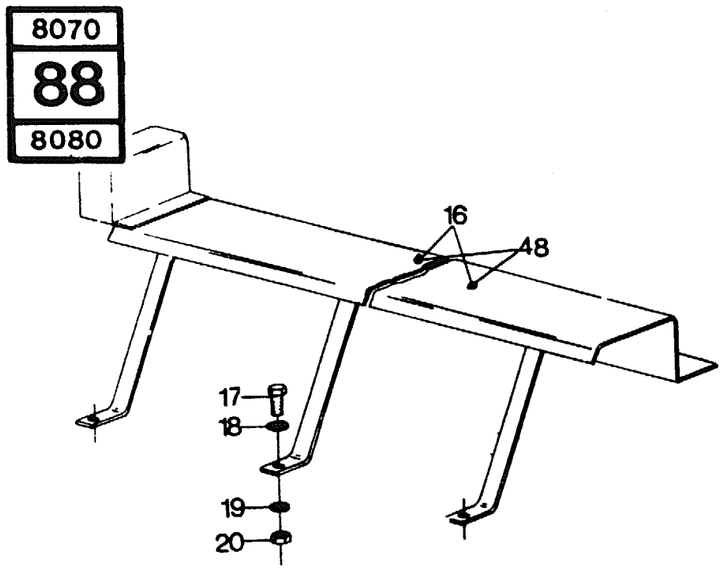

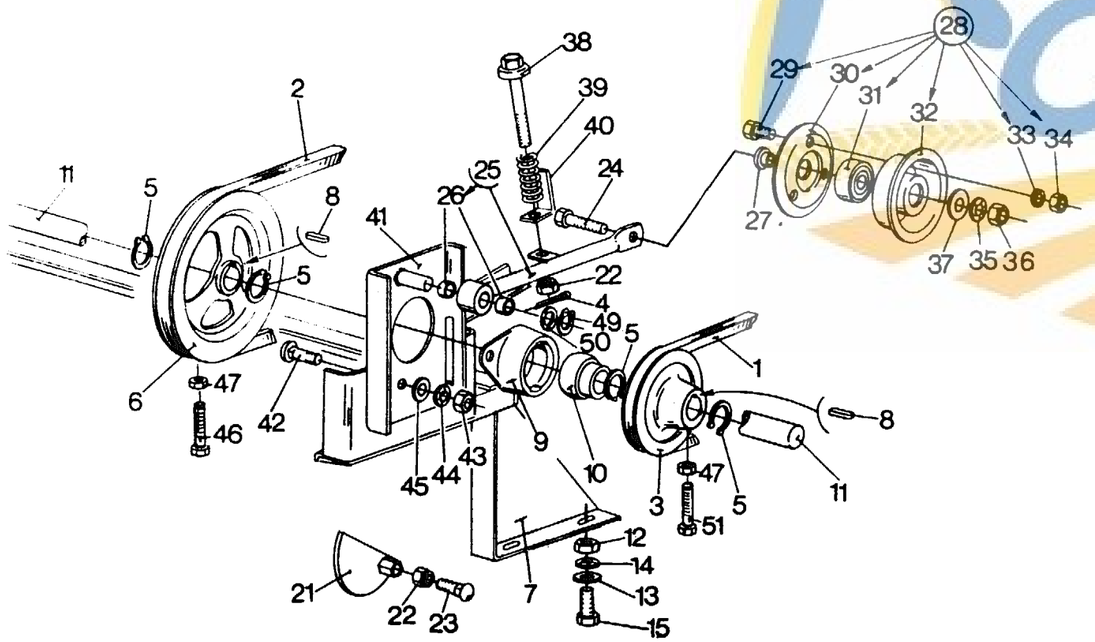

ROTARY DUST SCREEN DRIVE
COMMANDE DE LA PRISE D'AIR ROTATIVE
ANTRIEB DES ROTIERENDEN KÜHLERSIEBES
COMANDO DELLA COPERTURA ANTIPOLVERE ROTANTE
AANDRIJVING ROTERENDE STOFKAP

MODEL 8070-8080

Fig.	Order Ref.	CD	8070	8080	Code	Description	N.B
37	378245	9	1	1		Plain washer	
38	398087	7	1	1		Special bolt	0.5
39	180021	7	1	1		Spring	
40	398093	0	1	1		Indicator plate	
41	398084	1	1		643	Support	2.3
	454113	3	1		52	Support	
	398084	1		1	334	Support	
	454113	3		1	44	Support	
42	308761	9	2	2		Carriage bolt	
43	100015	8	5	5		Hex. nut	
44	322358	2	5	5		Tooth lockwasher	
45	378243	5	5	5		Plain washer	
46	412151	3	2	2		Hex. cap screw	
47	100037	4	2	2		Hex. nut	
48	450044	2	1		47	Guard	
	450044	2		1	40	Guard	
49	370024	3	1		52	Circlip	
	370024	3		1	44	Circlip	
50	395901	2	1		52	Washer	
	395901	2		1	44	Washer	
51	120070	8	2	2		Hex. cap screw	

https://michelroger.be

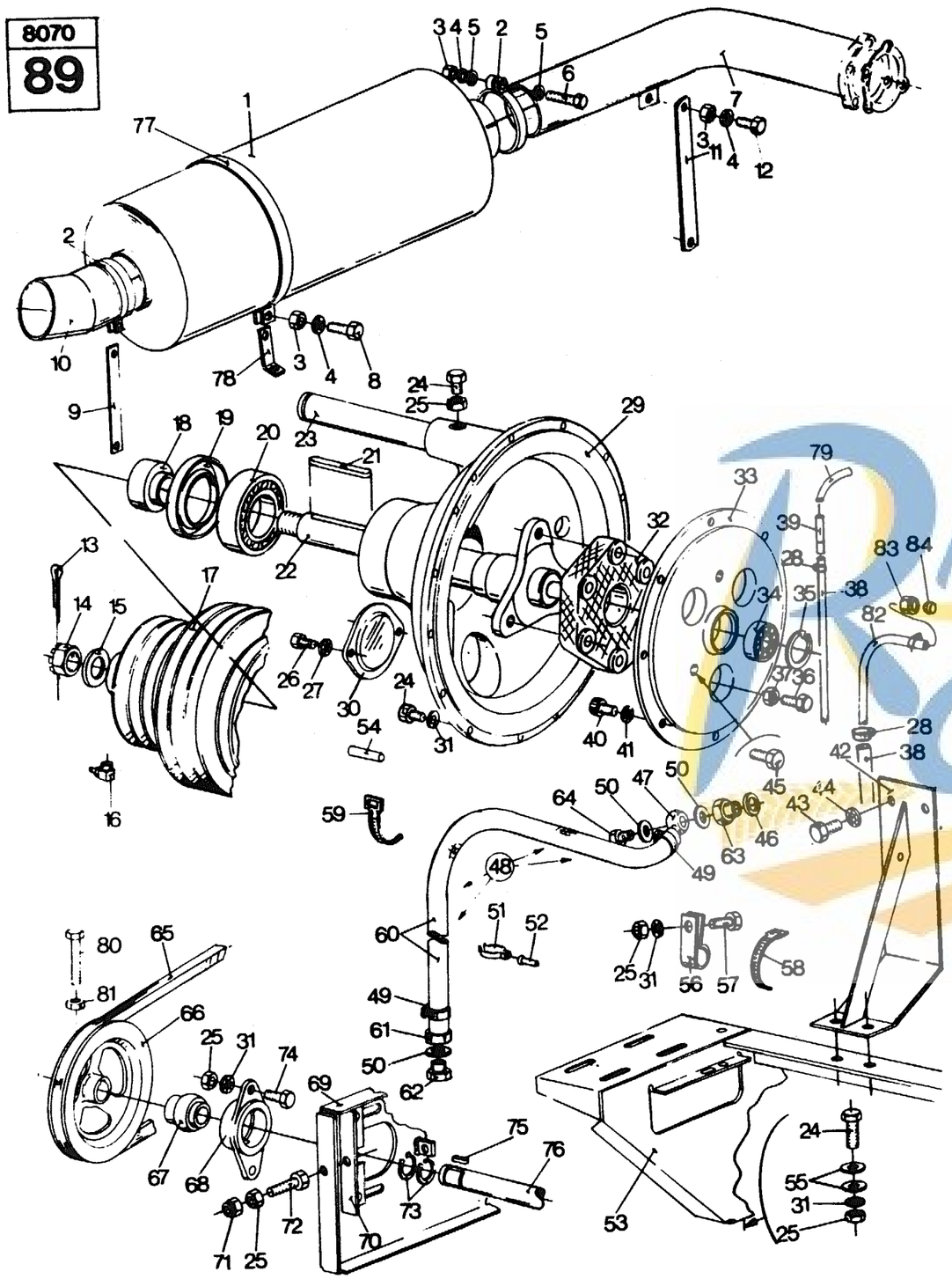

ATTACHING PARTS FOR MERCEDES OM 352 A ENGINE
ACCESSOIRES POUR MOTEUR MERCEDES OM 352 A
ZUBEHÖR FÜR MERCEDES MOTOR OM 352 A
ACCESSORI PER MOTORE MERCEDES, TIPO OM 352 A
TOEBEHOREN VOOR MERCEDES MOTOR OM 352 A

MODEL 8070

Fig.	Order Ref.	CD	8070	8080	Code	Description		N.B.
1	418860 2		1			Silencer	1.1	
2	354821 3		2			Clamp		
3	100015 8		2			Hex. nut		
4	322358 2		4			Tooth lockwasher		
5	378243 5		4			Plain washer		
6	300510 0		2			Hex. cap screw		
7	417082 1		1			Exhaust pipe	1.7	
8	120161 1		1			Hex. cap screw		
9	419483 3		1			Support		
10	395311 1		1			Exhaust pipe	0.5	
11	427003 7		1			Support		
12	120105 3		1			Hex. cap screw		
13	130016 6		1			Cotter pin		
14	390822 9		1			Castle nut	1.1	
15	140116 0		1			Washer		
16	323713 7		1			Grease fitting		
17	410671 3		1			Main drive pulley	3.8	Mechanical drive
	397275 5		1			Main drive pulley		Hydrostatic drive
18	410670 1		1			Collar	4.0	
19	387761 4		1			Grease seal		
20	387783 0		1			Bearing	4.2	Mechanical drive
	398949 5		1			Bearing		Hydrostatic drive
21	306248 9		1			Flat key		
22	417073 2		1			Shaft, Engine tail	10.1	
23	389796 9		1			Shaft	1.5	
24	120111 6		1			Hex. cap screw		
25	100016 0		1			Hex. nut		
26	120099 8		2			Hex. cap screw		
27	322357 0		2			Tooth lockwasher		
28	150064 1		2			Clamp	0.7	
29	411999 8		1			Housing, Engine bell	5.5	
30	378663 5		1			Cover		
31	140045 9		1			Tooth lockwasher		
32	385985 6		1			Flexible coupling	10.1	
33	392713 0		1			Flange		
34	034439 5		1			Bearing	9.9	
35	370011 6		1			Circlip	6.4	
36	120091 2		3			Hex. cap screw		
37	100020 9		3			Hex. nut		
38	160111 4		2			Pipe, Fuel oil		
39	370434 2		1			Pipe, Fuel oil		
40	300444 9		6			Hex. cap screw		

https://michelroger.be 195

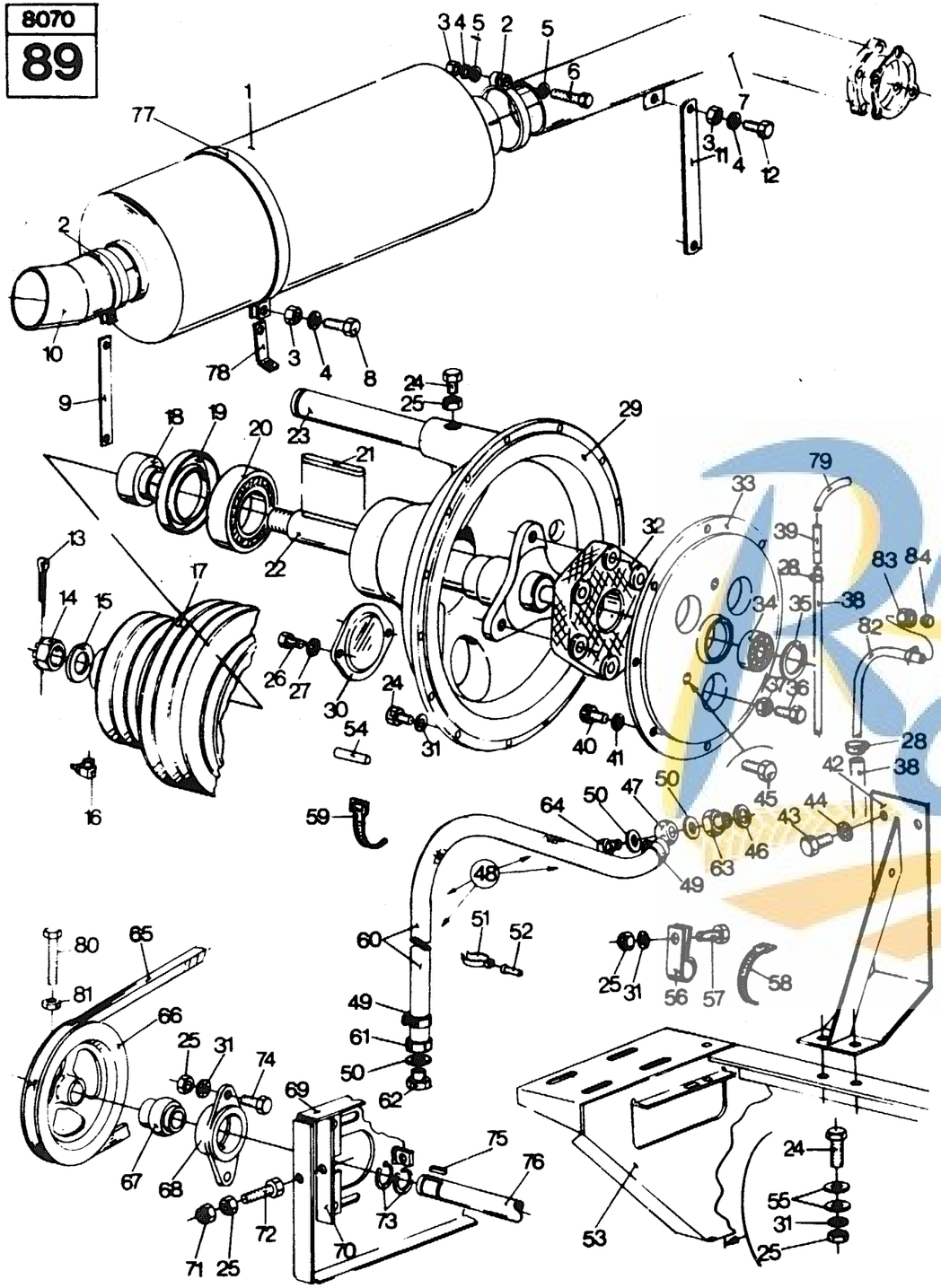

ATTACHING PARTS FOR MERCEDES OM 352 A ENGINE
ACCESSOIRES POUR MOTEUR MERCEDES OM 352 A
ZUBEHÖR FÜR MERCEDES MOTOR OM 352 A
ACCESSORI PER MOTORE MERCEDES, TIPO OM 352 A
TOEBEHOREN VOOR MERCEDES MOTOR OM 352 A

MODEL 8070

Fig.	Order Ref.	CD	8070	8080	Code	Description	N.B.
41	320177	6	6			Tooth lockwasher	
42	420138	5	1			Engine support, LH	
	410892	1	1		492	Engine support, RH	
	447611	0	1		47	Engine support, RH	
43	120120	5	4			Hex. cap screw	
44	140046	1	10			Tooth lockwasher	
45	385923	6	3			Hex. cap screw	
46	354977	2	1			Seal washer	
47	326078	2	1			Banjo connector	
48	419448	9	1			Hose assy, Oil drain	Incl.figs.47,49,50,60,61 and 62
49	326082	1	2			Hose clamp	0.7
50	220122	0	3			Seal washer	
51	326080	7	3			Spring clip	
52	130065	9	3			Rivet	
53	397360	6	1		643	Engine support	
	432029	8	1		52	Engine support	
54	365085	4	4			Dowel pin	
55	378244	7	10			Plain washer	
56	391230	5	3			Clamp	
57	120110	4	4			Hex. cap screw	
58	323597	9	1			Cable strap	
59	418407	2	2			Cable strap	
60	419447	7	1			Hose, Oil drain	
61	326079	4	1			Adapter fitting	
62	150060	3	1			Plug	
63	398510	6	1			Adapter fitting	
64	120258	6	1			Hollow screw	
65	389245	2	1			"V" belt	0.7
66	425909	5	1			Pulley	1.0
67	325110	1	1			Bearing	1.7
68	386537	8	1			Bearing housing	
69	397470	9	1			Support	
70	397465	8	1			Adjusting bracket	
71	100037	4	1			Hex. lock nut	
72	360296	6	1			Hex. cap screw	
73	370003	9	1			Circlip	1.0
74	120201	7	2			Hex. cap screw	
75	170030	4	1			Flat key	
76	426801	8	1			Shaft	1.1
77	330472	4	1			Clamp	
78	419450	4	1			Bracket	

https://michelroger.be 196

8070
89

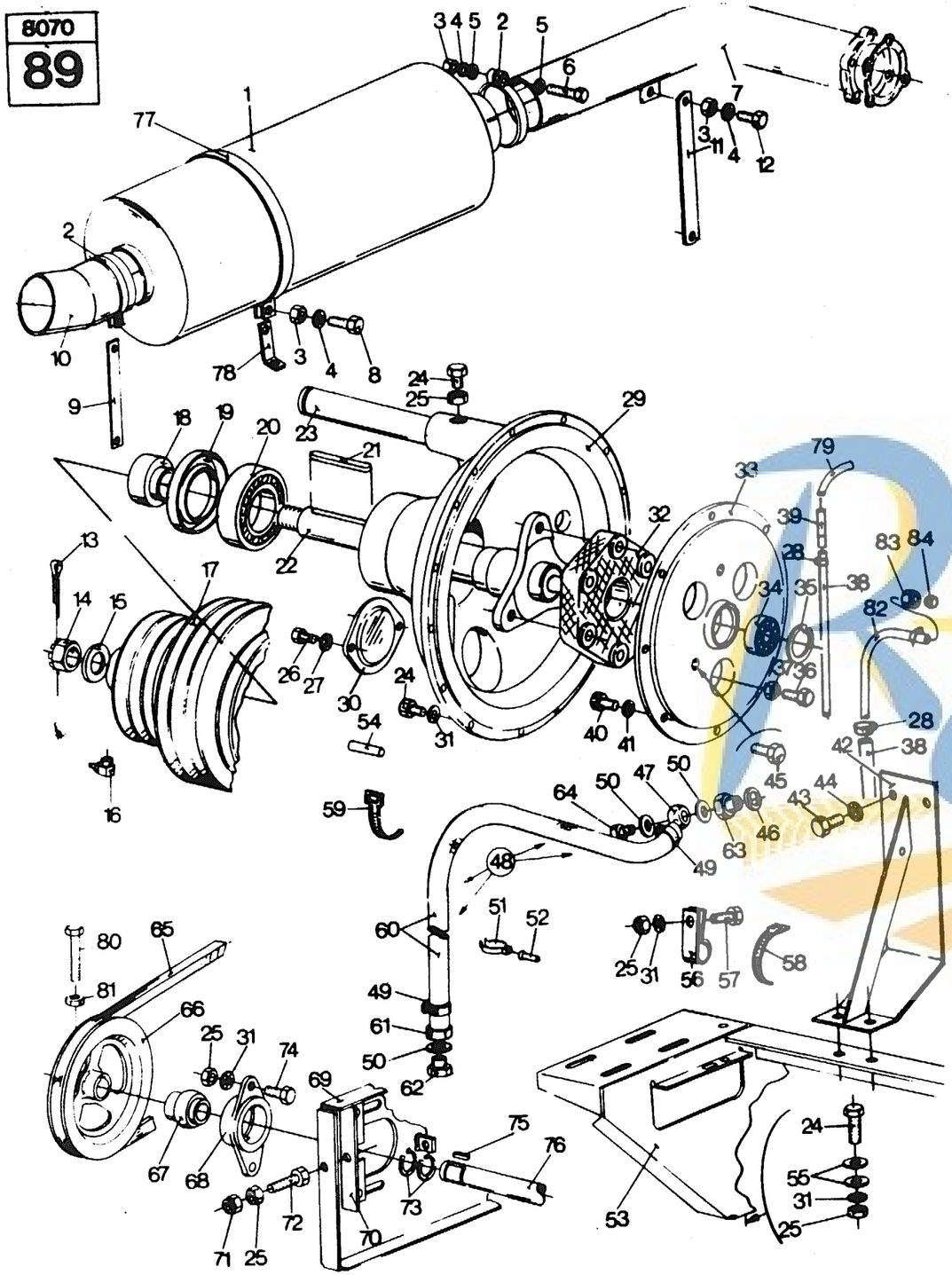

ATTACHING PARTS FOR MERCEDES OM 352 A ENGINE
ACCESSOIRES POUR MOTEUR MERCEDES OM 352 A
ZUBEHÖR FÜR MERCEDES MOTOR OM 352 A
ACCESSORI PER MOTORE MERCEDES, TIPO OM 352 A
TOEBEHOREN VOOR MERCEDES MOTOR OM 352 A

MODEL 8070

Fig.	Order Ref.	CD	8070	8080	Code	Description	N.B.
79	399333	1	1			Pipe, Fuel oil	
80	120070	8	1			Hex. cap screw	
81	100037	4	1			Hex. lock nut	
82	436488	4	1			Pipe, Fuel oil	
83	335135	5	1			Coupler nut	
84	335136	7	1			Ferrule	

Michel ROGER

https://michelroger.be 197

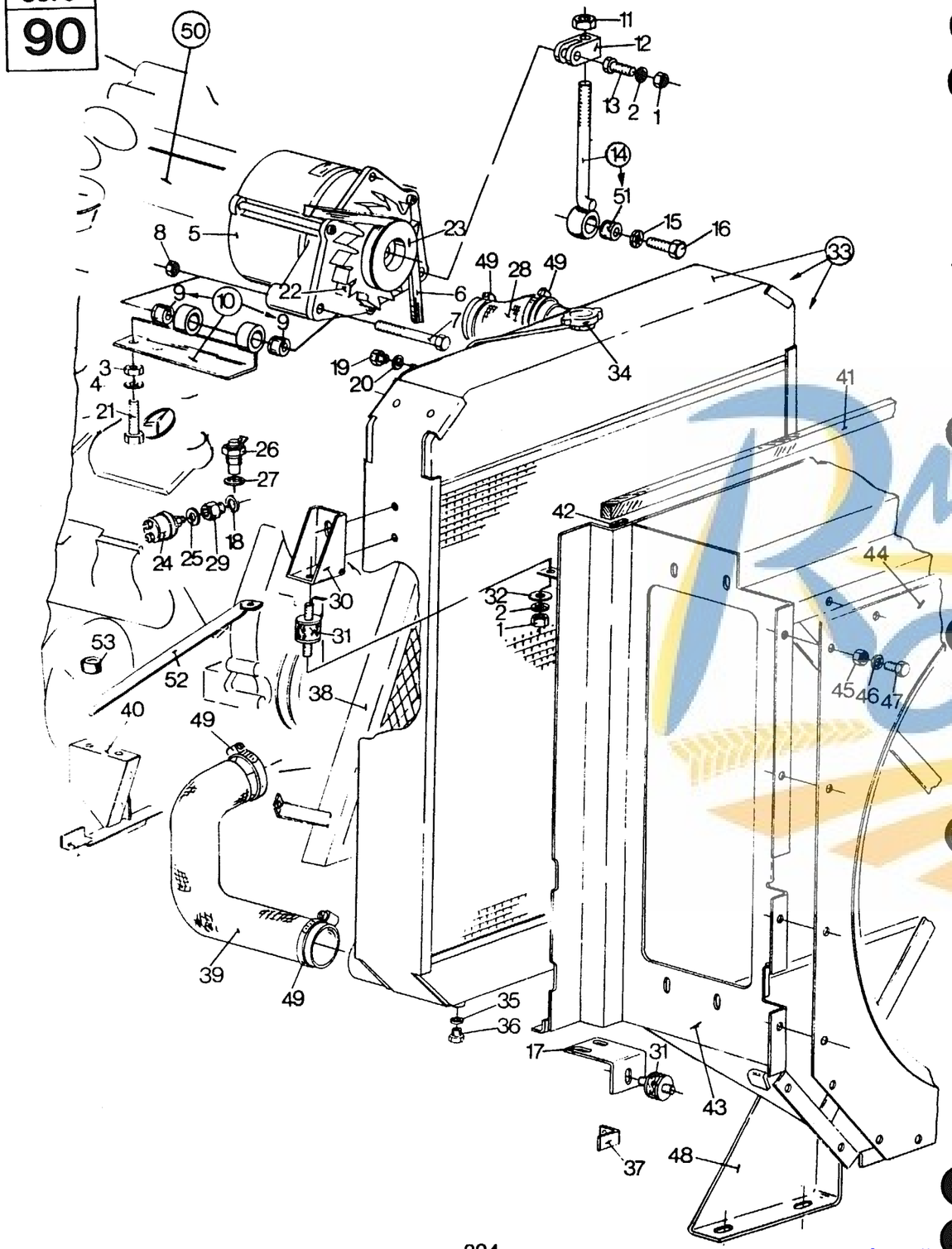

ATTACHING PARTS FOR MERCEDES OM 352 A ENGINE
ACCESSOIRES POUR MOTEUR MERCEDES OM 352 A
ZUBEHÖR FÜR MERCEDES MOTOR OM 352 A
ACCESSORI PER MOTORE MERCEDES, TIPO OM 352 A
TOEBEHOREN VOOR MERCEDES MOTOR OM 352 A

MODEL 8070

Fig.	Order Ref.	CD	8070	8080	Code	Description		N.B.
1	100015 8		10			Hex. nut		
2	322358 2		10			Tooth lockwasher		
3	100019 6		4			Hex. nut		
4	140047 3		1			Tooth lockwasher		
5	422746 6		1		643	Alternator assembly	1.4	65 amp.
	452309 6		1		52	Alternator assembly	1.4	65 amp.
6	421173 0		1			"V" belt	0.5	
7	120061 9		1			Hex. cap screw		
8	412250 3		1			Hex. lock nut		
9	392385 3		3			Bushing		
10	423015 8		1			Support		Incl. fig. 9
11	396160 1		1			Lock nut		
12	396159 8		1			Clamp		
13	396161 3		1			Hex. cap screw		
14	419743 5		1			Eye bolt		Incl. fig. 51
15	140045 9		10			Tooth lockwasher		
16	120201 7		3			Hex. cap screw		
17	389215 9		1			Bracket		
18	220049 4		1			Seal washer		
19	395889 4		1			Plug		
20	220049 4		1			Seal washer		
21	120086 1		4			Hex. cap screw		
22	422769 4		1			Alternator fan	1.1	
23	422772 1		1			Pulley	1.4	
24	372045 9		1			Sender, Oil pressure		
25	220105 4		1			Seal washer		
26	354834 0		1			Sender, Water temperature	0.4	
27	220049 4		1			Seal washer		
28	417075 6		1			Radiator hose		
29	398791 0		1			Adapter		
30	388145 9		2			Bracket		
31	393802 0		3			Shock absorber	0.5	
32	378243 5		10			Plain washer		
33	397092 7		1			Radiator assembly	1.9	Incl.figs.34,35 and 36
34	076896 3		1			Radiator cap	0.4	
35	220049 4		1			Seal washer		
36	395889 4		1			Drain plug		
37	399955 9		1			Bracket		Mechanical drive
38	420077 5		1			Safety guard		
39	417074 4		1			Radiator hose		
40	417076 8		1			Support		

https://michelroger.be 198

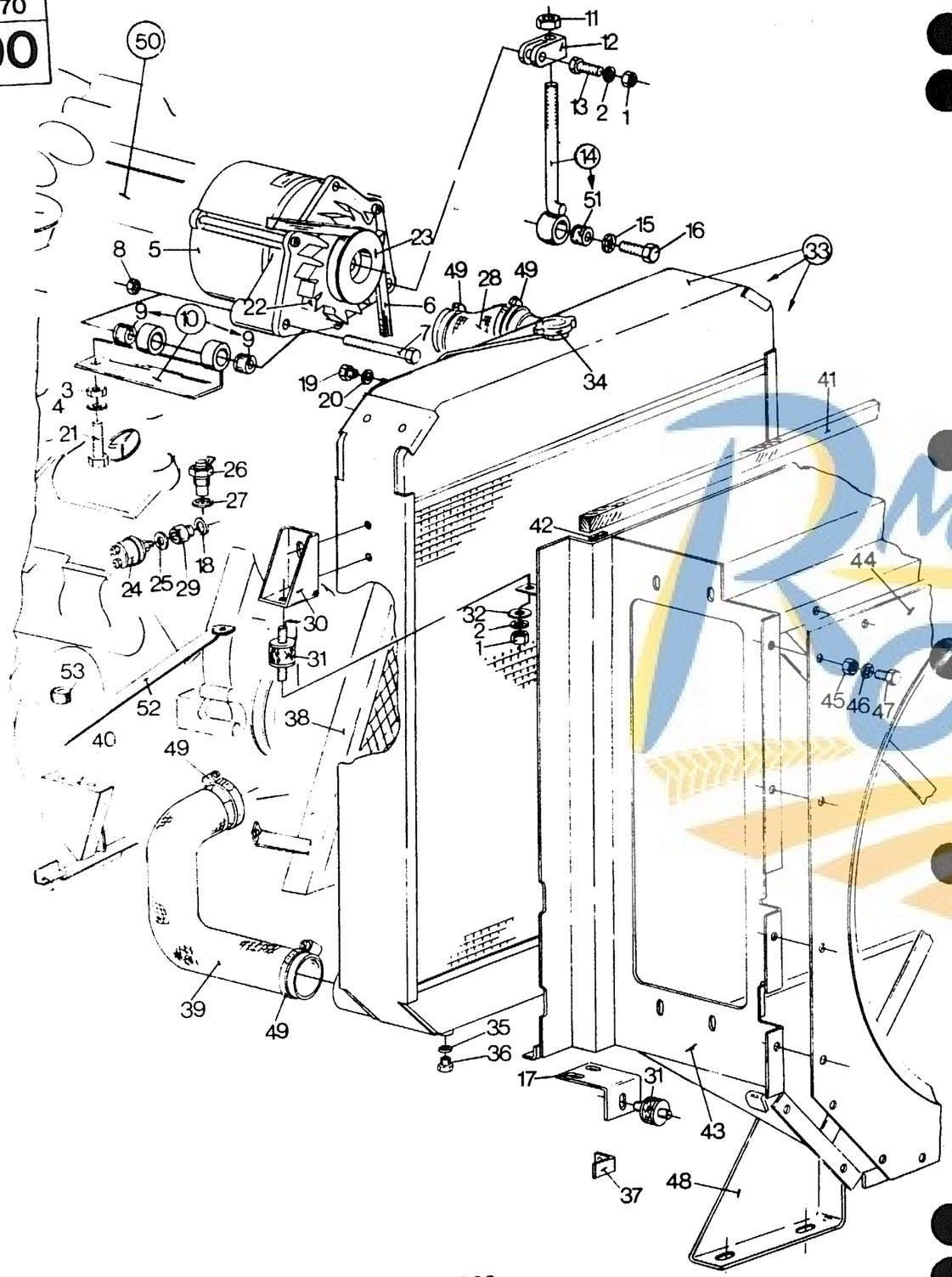

ATTACHING PARTS FOR MERCEDES OM 352 A ENGINE
ACCESSOIRES POUR MOTEUR MERCEDES OM 352 A
ZUBEHÖR FÜR MERCEDES MOTOR OM 352 A
ACCESSORI PER MOTORE MERCEDES, TIPO OM 352 A
TOEBEHOREN VOOR MERCEDES MOTOR OM 352 A

MODEL 8070

Fig.	Order Ref.	CD	8070	8080 Code	Description		N.B.
41	388143 5		2		Sealing strip	2.0	
42	327727 0		2		Sealing strip		
43	424404 4		1		Radiator cowling	3.7	Mechanical drive
	425261 1		1		Radiator cowling		Hydrostatic drive
44	388142 3		1		Plate		
45	100014 6		23		Hex. nut		
46	322357 0		31		Tooth lockwasher		
47	120099 8		28		Hex. cap screw		
48	397360 6		1	643	Radiator support		
	432030 1		1	52	Radiator support		
49	360747 3		4		Hose clamp		
50	317958 7		1		Engine assy, Mercedes OM 352 A	15.0	
51	395826 2		1		Bushing		
52	751098 9		1	65	Bracket		
53	200331 9		2	65	Bushing		

https://michelroger.be 199

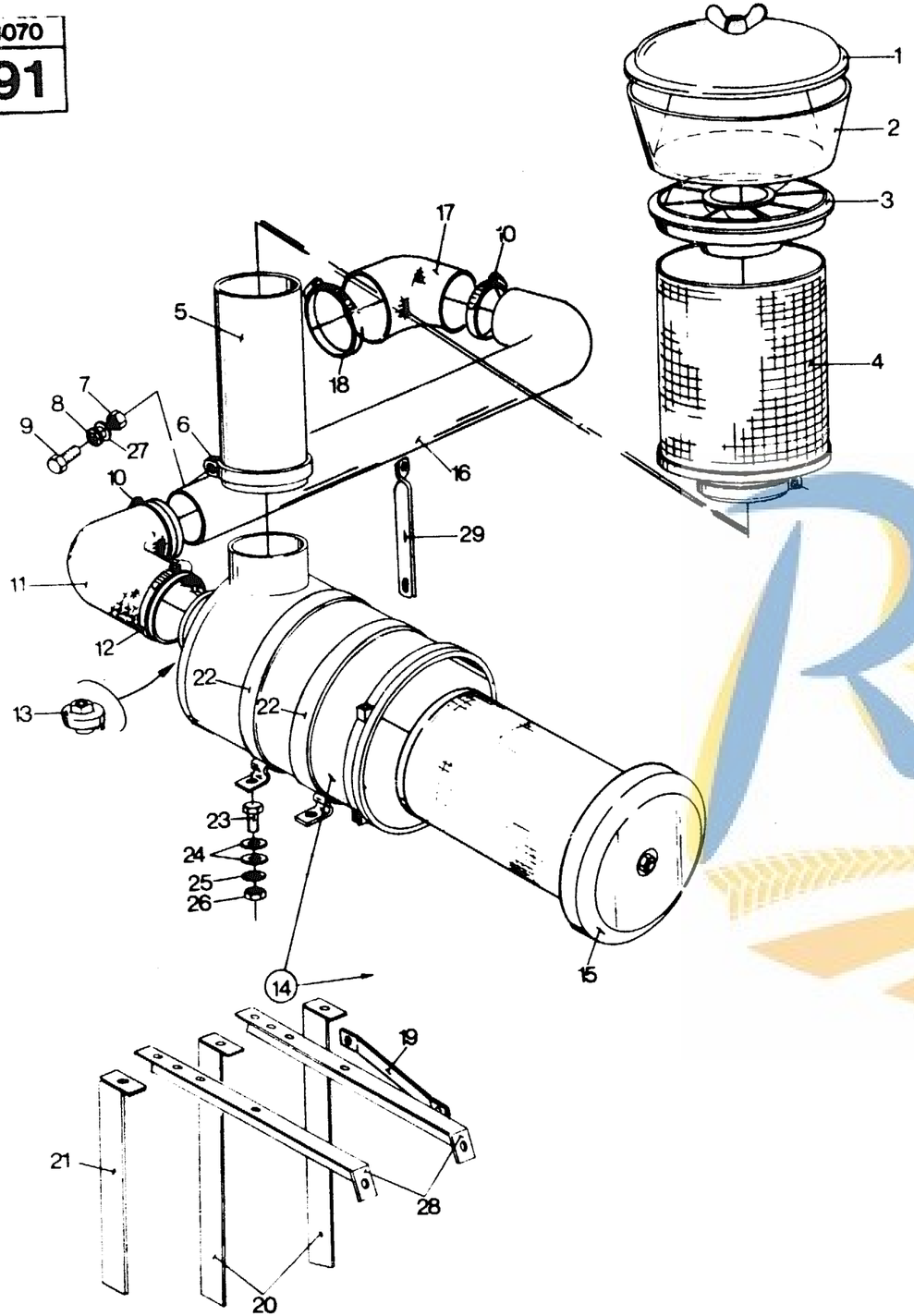

AIR FILTER
FILTRE A AIR
LUFTFILTER
FILTRO DELL'ARIA
LUCHTFILTER

MERCEDES AND FORD ENGINES

MODEL 8070

Fig.	Order Ref.	CD	8070	8080	Code	Description		N.B.
1	065271 6		1			Cover	0.4	
2	065273 0		1			Dust bowl		
3	065272 8		1			Sleeve assembly	0.5	
4	371883 4		1			Dust screen		
5	396175 2		1			Tube, air suction		
6	398710 0		1			Clamp		
7	100015 8		1			Hex. nut		
8	322358 2		1			Tooth lockwasher		
9	300510 0		1			Hex. cap screw		
10	064706 8		1			Hose clamp		Mercedes engine
	381145 2		2			Hose clamp		Ford engine
11	419629 3		1			Rubber hose		Mercedes engine
	398556 2		1			Rubber hose		Ford engine
12	064706 8		1			Hose clamp		
13	375644 2		1			Service indicator	0.4	
14	398602 1		1			Air filter assembly		Incl.fig. 15
15	399053 7		1			Filter element		
16	431415 6		1			Tube		Mercedes engine
	398555 0		1		336	Tube		Ford engine
	433414 6		1		33	Tube		Ford engine
17	432086 8		1			Rubber hose		Mercedes engine
	359952 5		1			Rubber hose		Ford engine
18	381145 2		1			Hose clamp		Mercedes engine
	359951 3		1			Hose clamp		Ford engine
19	411903 7		1		492	Brace		
20	398133 6		2		844	Support		
	743655 1		2		60	Support		
21	427232 2		1			Support		
22	411341 5		2			Clamp		
23	120119 2		4			Hex. cap screw		
24	378245 9		4			Plain washer		
25	140046 1		4			Tooth lockwasher		
26	337475 7		4			Hex. nut		
27	378243 5		1			Plain washer		
28	398135 0		2			Support		
29	432097 1		1			Support		

https://michelroger.be 200

92 ➧ 97

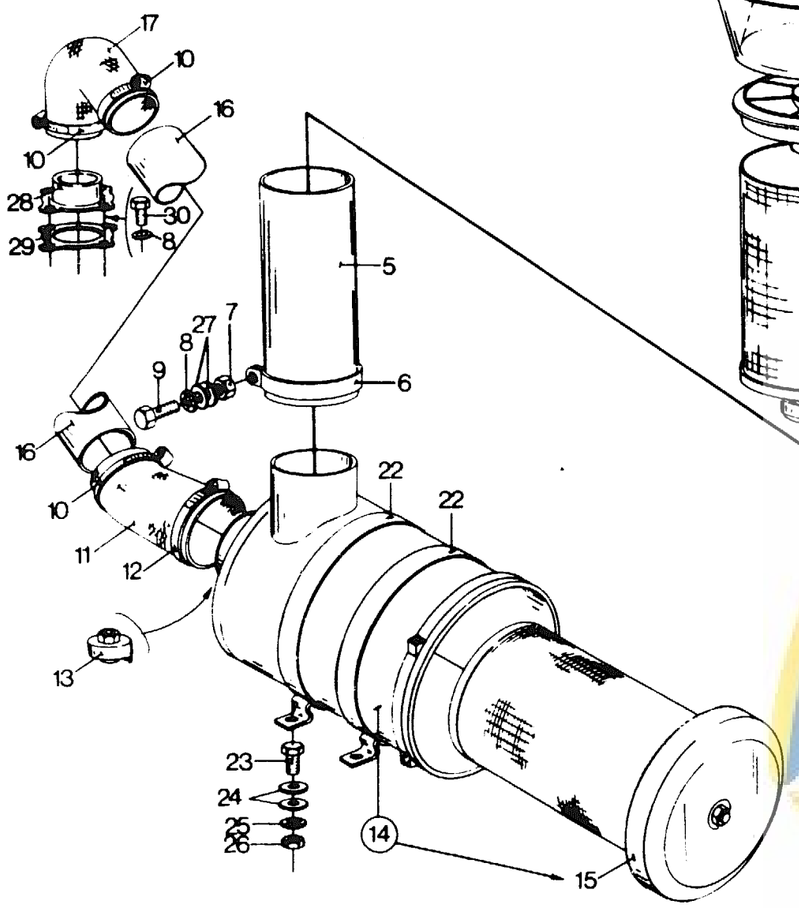

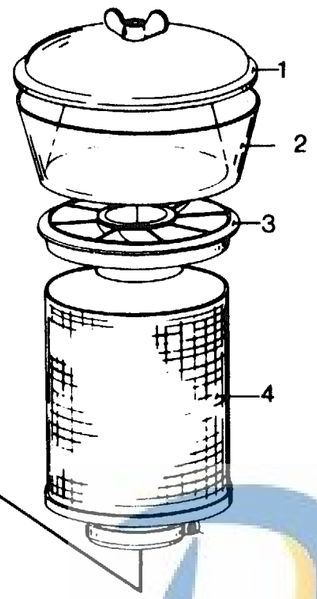

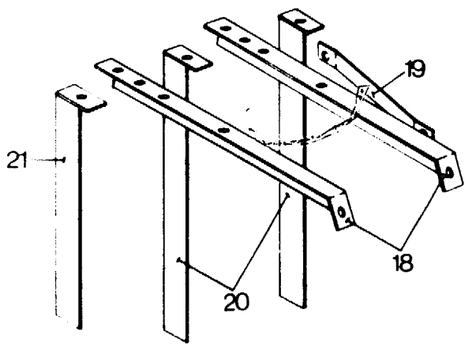

AIR FILTER
FILTRE A AIR
LUFTFILTER
FILTRO DELL'ARIA
LUCHTFILTER

Fig.	Order Ref.	CD	8070	8080	Code	Description	N.B.
1	065271 6		1			Cover	0.4
2	065273 0		1			Dust bowl	0.4
3	065272 8		1			Sleeve assembly	0.5
4	371883 4		1			Dust screen	0.5
5	396175 2		1			Tube, air suction	
6	398710 0		1			Clamp	
7	100015 8		1			Hex. nut	
8	322358 2		5			Tooth lockwasher	
9	120062 1		1			Hex. cap screw	
10	381145 2		3		845	Hose clamp	
	419950 4		3		40	Hose clamp	
11	431380 1		1			Rubber hose	
12	381144 0		1			Hose clamp	
13	375644 2		1			Service indicator	0.4
14	398602 1		1			Air filter assembly	Incl.fig. 15
15	399053 7		1			Filter element	
16	427827 3		1			Tube	
17	427826 1		1			Rubber hose	
18	398135 0		1			Support	
19	411903 7		1		492	Brace	
20	398133 6		2		844	Support	
	743655 1		2		60	Support	
21	427232 2		1			Support	
22	411341 5		2			Clamp	
23	120119 2		4			Hex. cap screw	
24	378245 9		4			Plain washer	
25	140046 1		4			Tooth lockwasher	
26	337475 7		4			Hex. nut	
27	378243 5		1			Plain washer	
28	427825 9		2			Flange	
29	427822 3		1			Gasket	
30	120104 1		4			Hex. cap screw	

https://michelroger.be 202

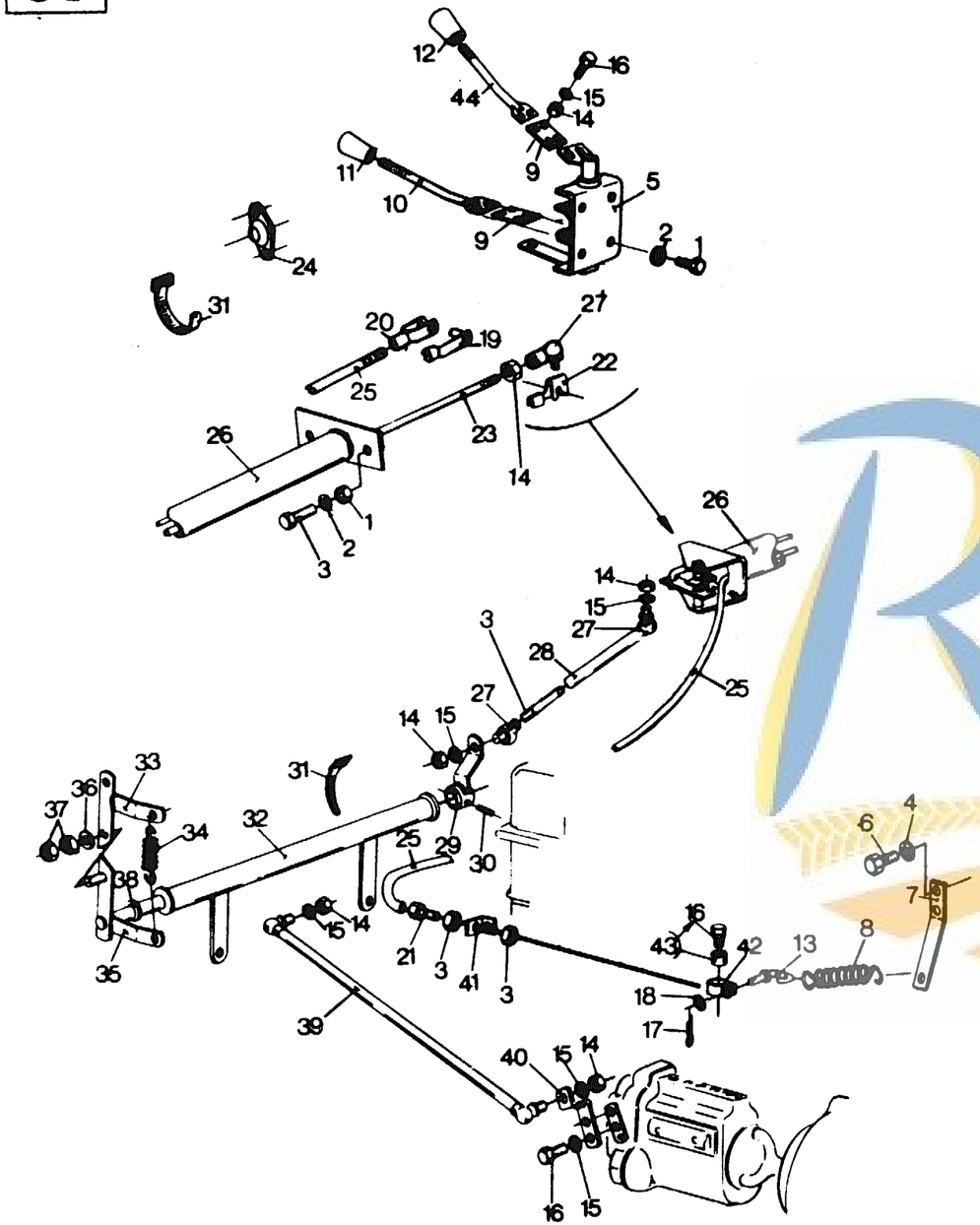

THROTTLE CONTROL FOR MERCEDES OM 352A ENGINE
MANETTE DE COMMANDE DES GAZ POUR MERCEDES OM 352A
GASHANDHEBEL MERCEDES OM 352A
MANOPOLA COMANDO ACCELARATORE, MOTORE MERCEDES TIPO OM 352A
GASHANDGREEP MOTOR MERCEDES OM 352A

MODEL 8070

Fig.	Order Ref.	CD	8070	8080 Code	Description	N.B
1	120104 1		4		Hex. cap screw	
2	322358 2		4		Tooth lockwasher	
3	412134 7		1		Hex. nut	
4	140045 9		2		Tooth lockwasher	
5	435484 5		1		Hinge w/a	
6	120109 1		2		Hex. lock nut	
7	420137 3		1		Spring anchor	
8	000015 7		1		Tension spring	
9	485978 2		2		Spring plate	
10	432017 3		1		Lever	
11	390897 6		1		Knob	
12	395458 1		1		Knob	
13	370647 3		1		Hook	
14	100014 6		16		Hex. nut	
15	322357 0		19		Tooth lockwasher	
16	120099 8		15		Hex. cap screw	
17	130002 7		1		Cotter pin	
18	140015 6		1		Washer	
19	417154 4		1		Clevis clip	
20	412012 9		1		Clevis	
21	750620 7		1		Adjusting screw	
22	367308 0		2		Clamp, clip, Rod end	
23	432023 6		1		Adjusting rod	
24	432745 6		1		Flange, ball hinge	
25	432773 5		1		Cable	1.4
26	435378 0		1		Support tube w/a	
27	350186 1		3		Ball hinge	
28	362502 7		1		Adjusting rod	
29	374342 1		1		Lever	
30	130043 3		1		Roll pin	
31	323597 9		1		Cable strap	
32	367373 7		1		Support tube	
33	437786 7		1		Lever	
34	853488 9		1		Spring	
35	354021 7		1		Lever	
36	378244 7		1		Washer	
37	100016 0		2		Hex. nut	
38	378245 9		1		Plain washer	
39	392214 2		1		Connecting rod	
40	354013 0		1		Lever	
41	417086 9		1		Bracket	
42	353369 2		1		Cable clevis	
43	484361 4		1		Cable clamp	
44	437354 2		1		Lever	

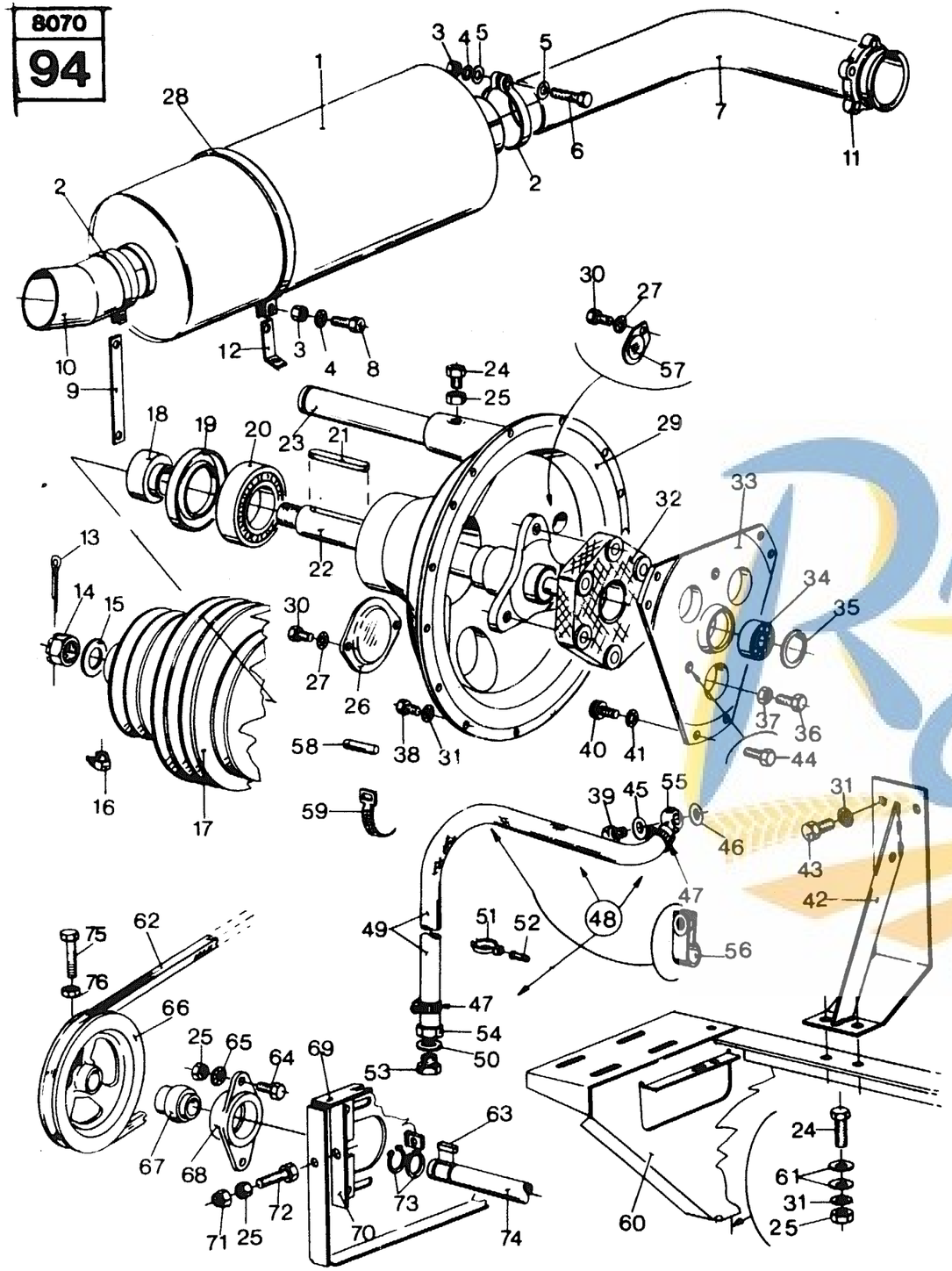

ATTACHING PARTS FOR FORD 2704 ET ENGINE
ACCESSOIRES POUR MOTEUR FORD 2704 ET
ZUBEHÖR FÜR FORD MOTOR 2704 ET
ACCESSORI PER MOTORE FORD, TIPO 2704 ET
TOEBEHOREN VOOR FORD MOTOR 2704 ET

USED ON AND BELOW SERIAL No. 4239999

MODEL 8070

Fig.	Order Ref.	CD	8070	8080	Code	Description		N.B.
1	418860 2		1			Silencer	1.1	
2	354821 3		2			Clamp		
3	100015 8		AR			Hex. nut		
4	322358 2		AR			Tooth lockwasher		
5	378243 5		AR			Plain washer		
6	300510 0		3			Hex. cap screw		
7	398599 2		1			Exhaust pipe	1.7	
8	120161 1		1			Hex. cap screw		
9	419483 3		1			Support		
10	395311 1		1			Exhaust pipe	0.5	
11	355102 0		1			Flange		
12	419450 4		1			Support		
13	130016 6		1			Cotter pin		
14	390822 9		1			Castle nut	1.1	
15	140116 0		1			Washer		
16	323713 7		1			Grease fitting		
17	410671 3		1			Pulley, Main drive	3.8	Mechanical drive
	397275 5		1			Pulley, Main drive		Hydrostatic drive
18	410670 1		1			Collar	4.0	
19	387761 4		1			Grease seal		
20	387783 0		1			Bearing	4.2	Mechanical drive
	398949 5		1			Bearing		Hydrostatic drive
21	306248 9		1			Flat key		
22	393492 1		1			Shaft, Engine tail	10.1	
23	389796 9		1			Shaft	1.5	
24	120111 6		1			Hex. cap screw		
25	100016 0		1			Hex. nut		
26	378663 5		1			Cover		
27	322357 0		AR			Tooth lockwasher		
28	330472 4		2			Clamp		
29	410672 5		1			Housing, Engine bell	5.5	
30	120099 8		AR			Hex. cap screw		
31	081547 1		AR			Tooth lockwasher		
32	385985 6		1			Flexible coupling	10.1	
33	393467 8		1			Engine flange		
34	034439 5		1			Bearing	9.9	
35	370011 6		1			Circlip	6.4	
36	120091 2		3			Hex. cap screw		
37	100020 9		3			Hex. nut		
38	088260 0		19			Hex. cap screw		

https://michelroger.be 204

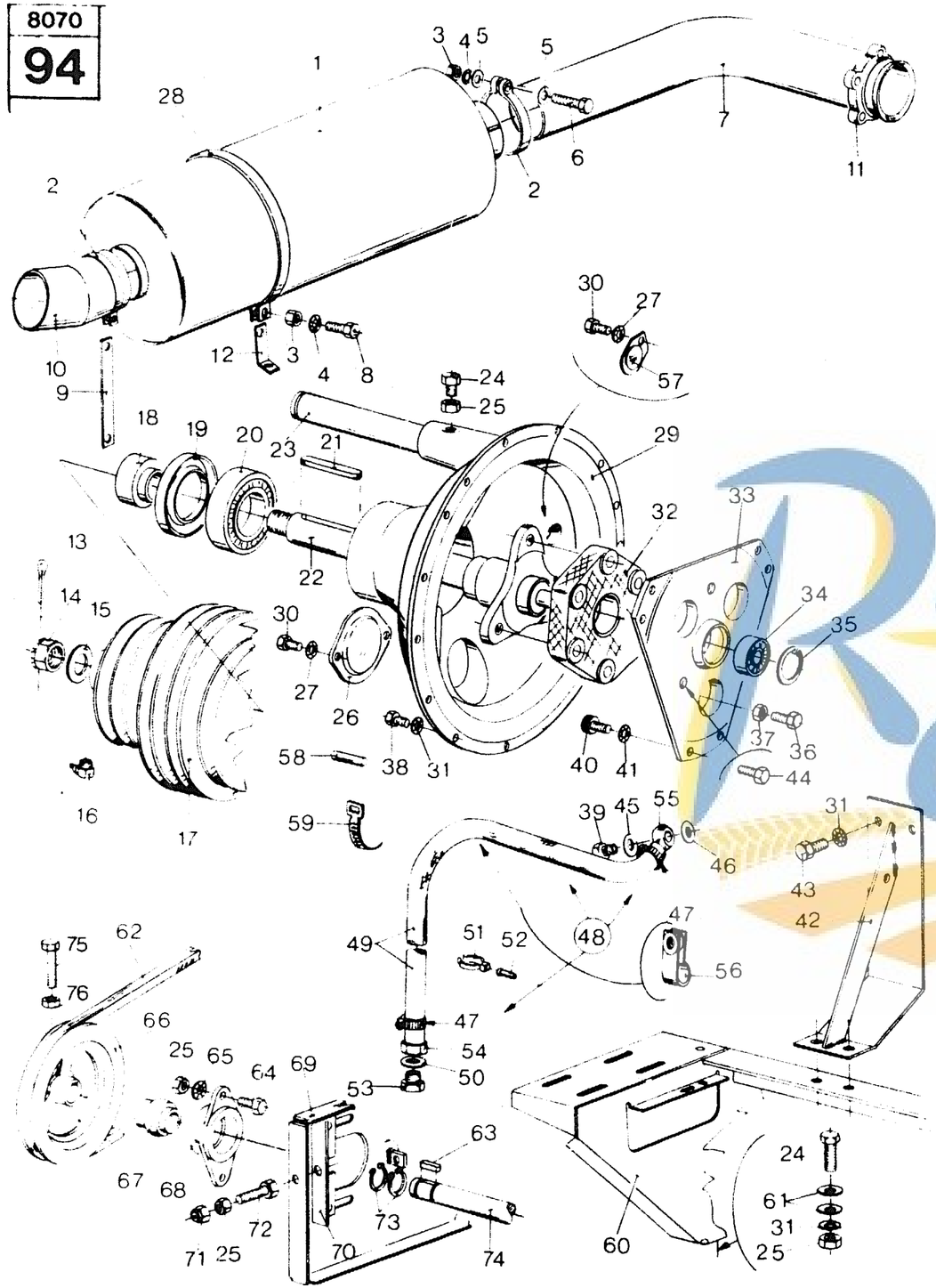

ATTACHING PARTS FOR FORD 2704 ET ENGINE
ACCESSOIRES POUR MOTEUR FORD 2704 ET
ZUBEHÖR FÜR FORD MOTOR 2704 ET
ACCESSORI PER MOTORE FORD, TIPO 2704 ET
TOEBEHOREN VOOR FORD MOTOR 2704 ET

USED ON AND BELOW SERIAL No. 4239999

MODEL 8070

Fig.	Order Ref.	CD	8070	8080 Code	Description	N.B.
39	120258 6		1		Hollow screw	
40	088011 3		6		Hex. cap screw	
41	080680 2		6		Tooth lockwasher	
42	397012 9		2		Engine support	
43	088754 7		4		Hex. cap screw	
44	120090 0		3		Hex. cap screw	
45	220122 0		3		Seal washer	
46	220120 6		1		Seal washer	
47	326082 1		2		Hose clamp	
48	419448 9		1		Hose assy., Oil drain	Incl.figs. 47,49,50,60,61 and 62
49	419447 7		1		Hose, Oil drain	
50	220122 0		3		Seal washer	
51	326080 7		3		Spring clip	
52	130065 9		3		Rivet	
53	150060 3		1		Plug	
54	326079 4		1		Adapter	
55	326078 2		1		Banjo connector	
56	418407 2		1		Clamp	
57	321662 6		2	643	Cover	
	456468 6		2	52	Cover	
58	260037 7		2		Dowel pin	
59	323597 9		1		Cable strap	
60	397360 6		1		Engine support	17.9
61	378244 7		AR		Plain washer	
62	389245 2		1		"V" belt	0.7
63	170030 4		1		Flat key	
64	120201 7		2		Hex. cap screw	
65	140045 9		2		Tooth lockwasher	
66	425909 5		1		"V" pulley	1.0
67	325110 1		1		Bearing	1.7
68	386537 8		1		Bearing housing	
69	397470 9		1		Support	
70	397465 8		1		Adjusting bracket	
71	100037 4		1		Lock nut	
72	120075 8		1		Hex. cap screw	
73	370003 9		2		Circlip	0.3
74	426801 8		1		Shaft	4.1
75	120070 8		1		Hex. cap screw	
76	100037 4		1		Hex. iock nut	

https://michelroger.be

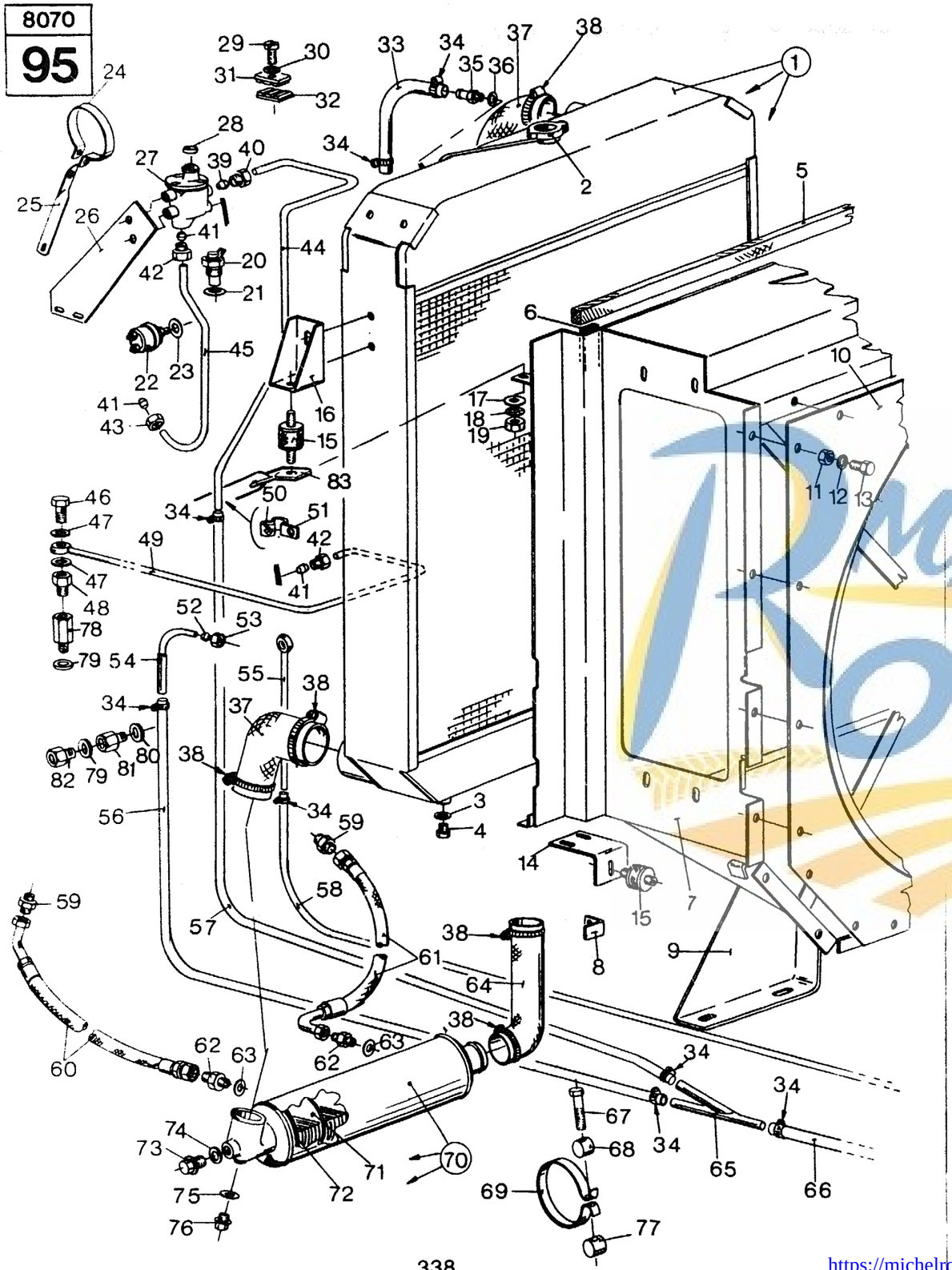

ASSEMBLY PARTS FOR FORD 2704 ET ENGINE
PIECE D'ASSEMBLAGE POUR FORD 2704 ET
ANBAUTEILE FÜR FORD 2704 ET
PEZZI DI MONTAGGIO PER FORD 2704 ET
AANBOUWDELEN FORD 2704 ET

ONLY VALID UNTIL SERIAL No : 4239999

MODEL 8070

Fig.	Order Ref.	CD	8070	Code	Description		N.B
1	397092	7	1		Radiator	1.9	Incl. figs. 2,3,4
2	076896	3	1		Cap	0.3	
3	220049	4	1		Seal washer		
4	395889	4	1		Plug		
5	388143	5	2		Sealing strip		
6	394734	6	2		Sealing strip		
7	424404	4	1		Radiator cowling	3.0	Mechanical drive
	425261	1	1		Radiator cowling		Hydrostatic drive
8	399955	9	1		Support		Mechanical drive
9	432030	1	1		Engine support		
10	388142	3	1		Plate		
11	100014	6	AR		Hex. nut		
12	322357	0	AR		Tooth lockwasher		
13	120099	8	AR		Hex. cap screw		
14	389215	9	1		Support		
15	393802	0	3		Shock absorber	0.5	
16	388145	9	2		Support		
17	378243	5	4		Plain washer		
18	322358	2	AR		Tooth lockwasher		
19	100015	8	AR		Hex. nut		
20	322512	0	1		Sender, Water temperature		
21	220049	4	1		Seal washer	0.4	
22	372044	7	1		Sender, Oil pressure		
23	220105	4	1	865	Seal washer		
	9511037	9	1	75	Seal washer		
24	308532	4	1		Clamp		
25	419449	1	1		Support		
26	381133	7	1		Support		
27	381095	5	1		Reservoir, Cold start		
28	381135	1	1		Seal ring		
29	396016	6	2		Machine screw		
30	140026	9	2		Tooth lockwasher		
31	395957	9	2		Clamp		
32	395956	7	2		Clamp		
33	417814	4	1		Rubber pipe		
34	150064	1	10		Clamp		
35	395779	1	1		Connector		
36	220049	4	1		Seal washer		
37	397078	7	2		Rubber elbow		
38	360747	3	6		Hose clamp		
39	381104	6	1		Ferrule		
40	381105	8	1		Connector		
41	381102	2	3		Ferrule		

GROUP
95

https://michelroger.be 206

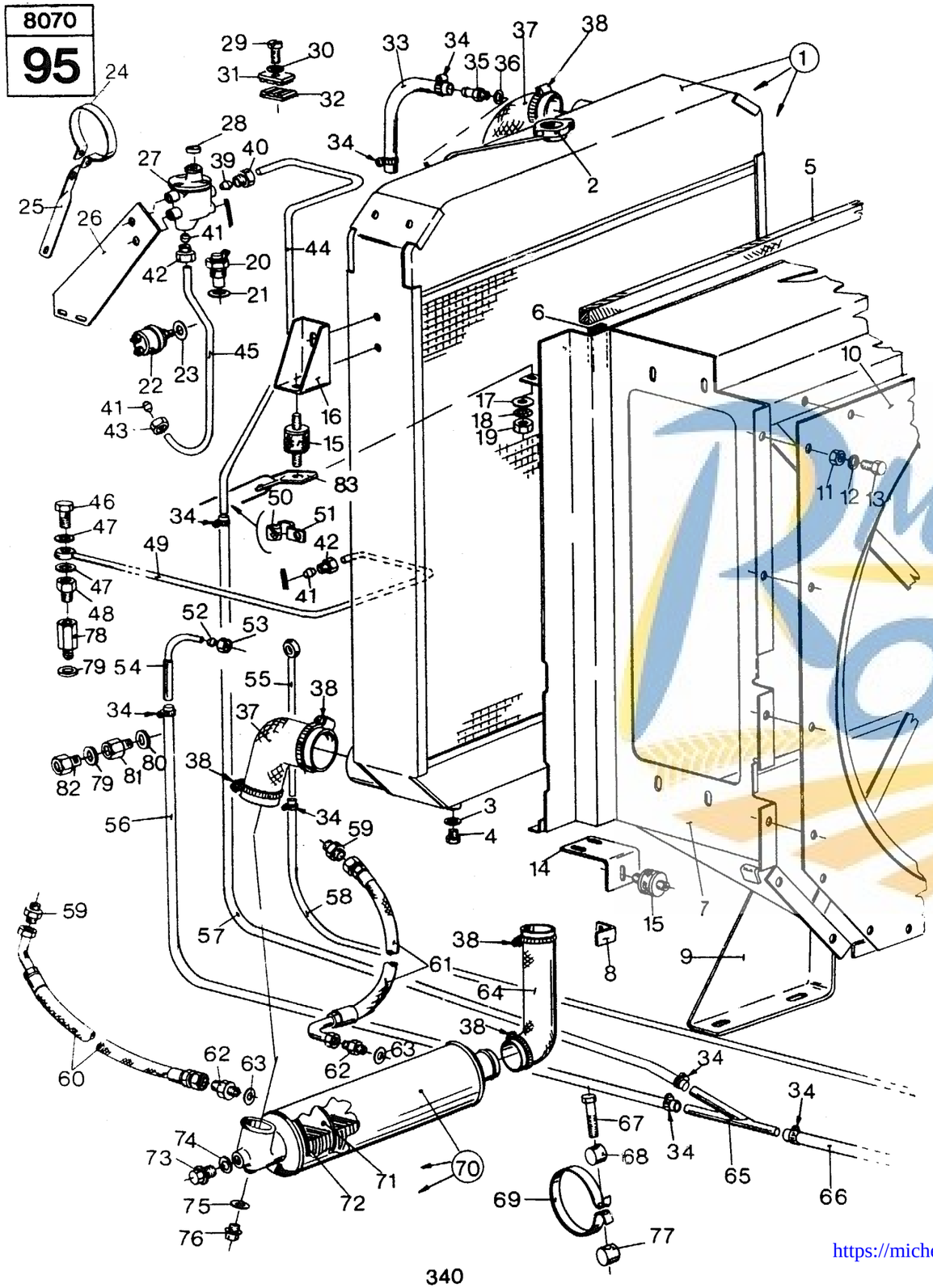

ASSEMBLY PARTS FOR FORD 2704 ET ENGINE
PIECE D'ASSEMBLAGE POUR FORD 2704 ET
ANBAUTEILE FÜR FORD 2704 ET
PEZZI DI MONTAGGIO PER FORD 2704 ET
AANBOUWDELEN FORD 2704 ET

ONLY VALID UNTIL SERIAL No : 4239999

MODEL 8070

Fig.	Order Ref.	CD	8070	8080 Code	Description	N.B
42	381100	8	2		Adapter	
43	381101	0	1		Coupler nut	
44	384338	4	1		Pipe, Fuel oil	
45	384305	5	1		Pipe, Fuel oil	
46	381097	9	1		Hollow screw	
47	381099	3	2		Seal washer	
48	381096	7	1	336	Adapter	
49	384339	6	1	336	Pipe, Fuel oil	
	438902	6	1	33	Pipe, Fuel oil	
50	322805	1	1		Rubber protection	
51	330005	5	1		Clamp	
52	330997	6	2		Cone	
53	330999	0	2		Coupler nut	
54	160170	8	1		Pipe, Fuel oil	
55	337322	4	1		Pipe, Fuel oil	
56	160036	4	1	336	Pipe, Fuel oil (return)	
	383912	1	1	33	Pipe, Fuel oil (return)	
57	383912	1	1		Pipe, Fuel oil (return)	
58	308684	5	1	336	Pipe, Fuel oil (return)	
	160036	4	1	33	Pipe, Fuel oil (return)	
59	355066	2	2		Straight connector	
60	411340	3	1		Oil hose	
61	411339	0	1		Oil hose	
62	366235	4	2		Straight connector	
63	373374	7	2		Seal washer	
64	398557	4	1		Rubber hose	
65	308668	1	1		Fork pipe	
66	308686	9	1		Pipe, Fuel oil (return)	
67	300382	7	2		Hex. cap screw	
68	367685	8	2		Hinge clamp	
69	367684	6	2		Clamp	
70	373604	6	1		Oil cooler assy	1.7 Incl. figs.71,72,73,74,75 and 76
71	375783	6	1		Cooler element	
72	375782	4	2		Seal ring	
73	375781	2	1		Plug	
74	375780	0	1		Seal washer	
75	375779	7	1		Seal washer	
76	375778	5	1		Plug	
77	367683	4	2		Clamp nut	
78	438900	2	1		Valve, non return	
79	437811	2	2		Seal washer	
80	438901	4	1		Seal washer	

https://michelroger.be

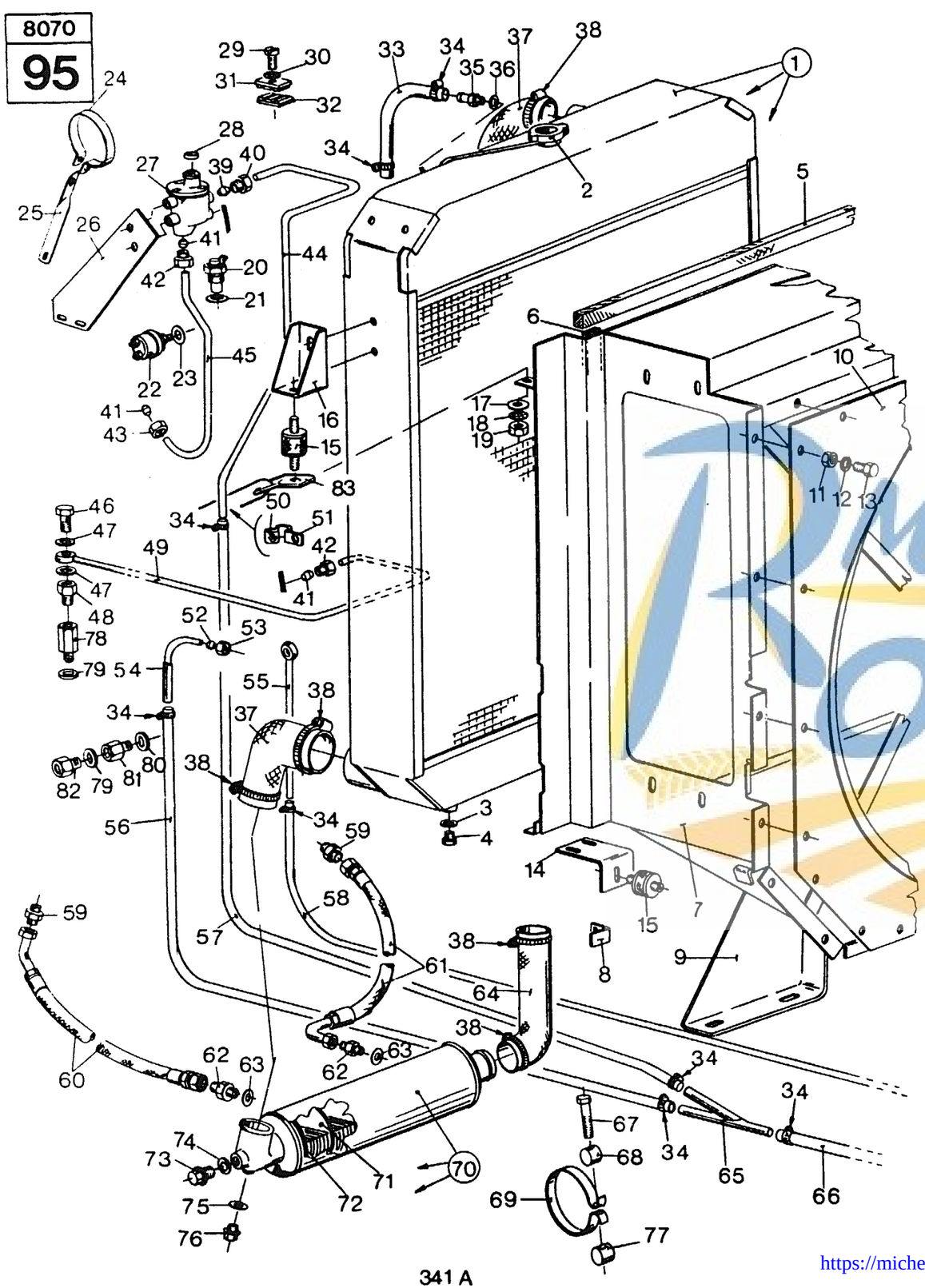

341 A

ASSEMBLY PARTS FOR FORD 2704 ET ENGINE
PIECE D'ASSEMBLAGE POUR FORD 2704 ET
ANBAUTEILE FÜR FORD 2704 ET
PEZZI DI MONTAGGIO PER FORD 2704 ET
AANBOUWDELEN FORD 2704 ET

ONLY VALID UNTIL SERIAL No : 4239999

MODEL 8070

Fig.	Order Ref.	CD	8070	8080 Code	Description	N.B
81	437817	4	1		Adapter	
82	380592	8	1		Valve, non return	
83	**751098**	**9**	1		Support	

Michel ROGER

https://michelroger.be 208

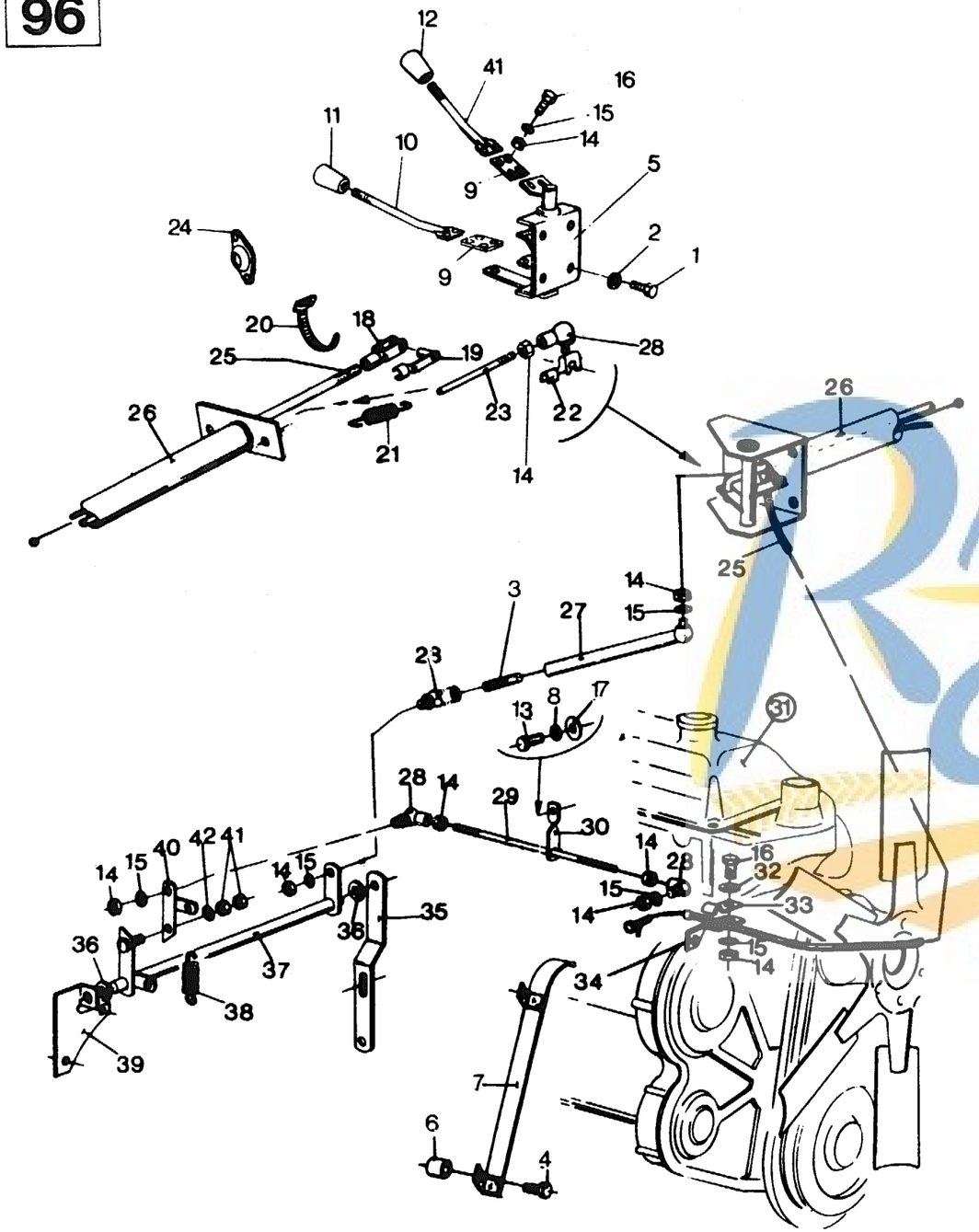

THROTTLE CONTROL FOR FORD 2704 ET ENGINE
MANETTE DE COMMANDE DES GAZ POUR MOTEUR FORD 2704 ET
GASHANDHEBEL FORD MOTOR 2704 ET — USED ON AND BELOW SERIAL No. 4239999
MANOPOLA COMANDO ACCELARATORE, MOTORE FORD, TIPO 2704 ET
GASHANDGREEP FORD MOTOR 2704 ET — MODEL 8070

Fig.	Order Ref.	CD	8070	8080	Code	Description	N.B.
1	120104	1	4			Hex. cap screw	
2	378243	5	4			Tooth lockwasher	
3	412134	7	1			Adjusting rod	
4	088543	0	2			Hex. cap screw	
5	435484	5	1			Hinge w/a	
6	200203	8	2			Bushing	
7	419793	0	1			Guard	
8	080680	2	1			Tooth lockwasher	
9	485978	2	2			Spring plate	
10	432017	3	1			Lever	
11	395458	1	1			Knob	
12	390897	6	1			Knob	
13	088703	0	1			Hex. cap screw	
14	100014	6	18			Hex. nut	
15	322357	0	18			Tooth lockwasher	
16	120099	8	12			Hex. cap screw	
17	378244	7	2			Washer	
18	412012	9	1			Yoke	
19	417154	4	1			Clevis clip	
20	323597	9	1			Cable strap	
21	038669	6	1			Spring	
22	367308	0	2			Spring clip	
23	432023	6	1			Adjusting rod	
24	432745	6	1			Flange, Ball hinge	
25	432772	3	1			Cable	
26	435378	0	1			Support tube w/a	
27	362502	7	1			Adjusting rod	
28	350186	1	1			Ball hinge	
29	399187	0	1			Adjusting rod	
30	324093	2	1			Support	
31	316666	7	1			Engine assy., Ford 2704 ET	
32	140040	9	1			Plain washer	
33	433295	2	1			Clamp	
34	378999	6	1			Bracket	
35	353367	8	1			Bracket	
36	378245	9	2			Spacer washer	
37	399188	2	1			Lever	
38	180063	5	1			Spring	0.4
39	336937	6	1			Bracket	
40	362250	2	1			Lever	
41	437354	2	1			Hex. nut	
42	378244	7	1			Tooth lockwasher	

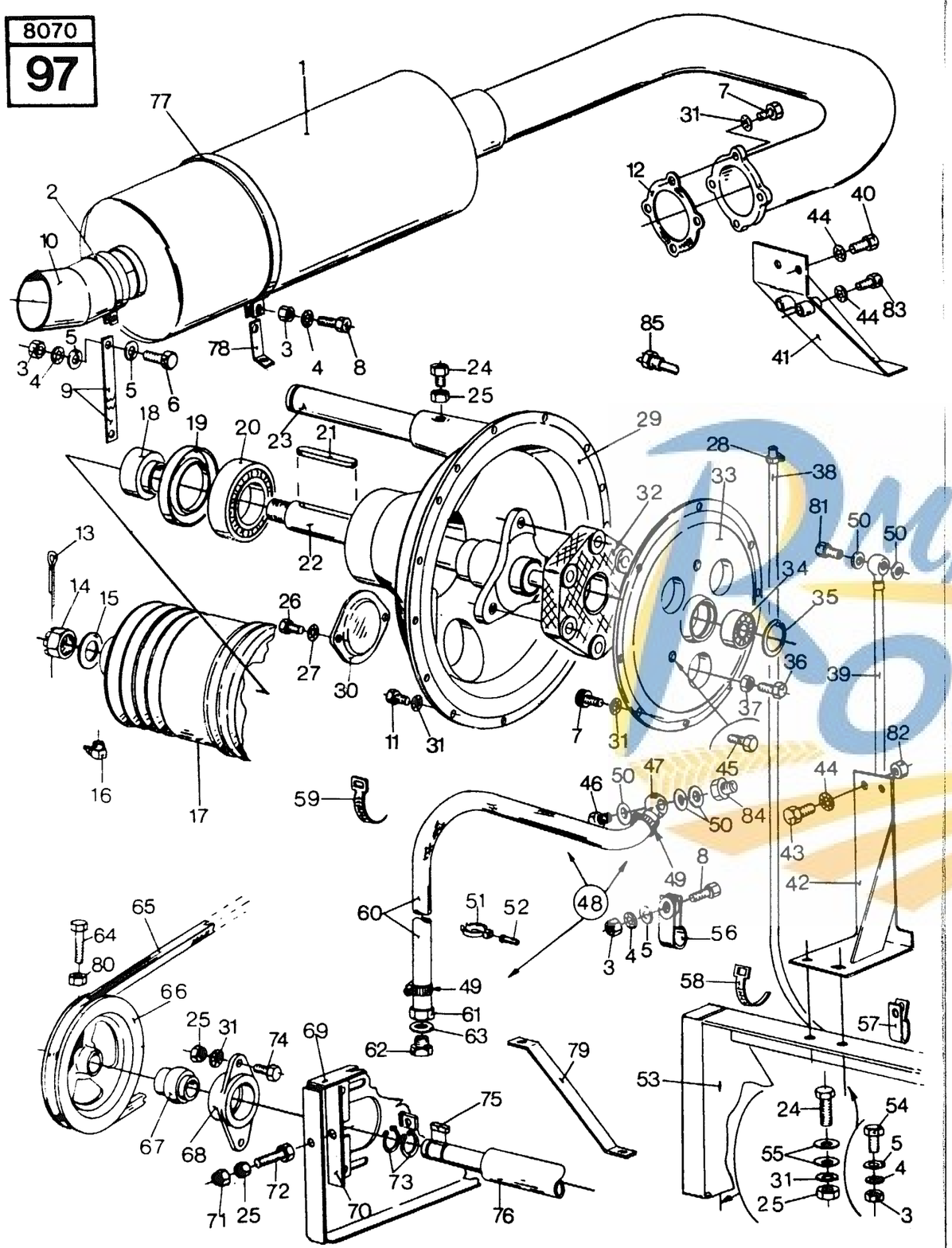

344

ATTACHING PARTS FOR FIAT 8361 I ENGINE
ACCESSOIRES POUR MOTEUR FIAT 8361 I
ZUBEHÖR FÜR FIAT MOTOR 8361 I
ACCESSORI PER MOTORE FIAT 8361 I
TOEBEHOREN VOOR FIAT 8361 I

MODEL 8070

Fig.	Order Ref.	CD	8070	8080	Code	Description	N.B.	
1	427915 0		1			Silencer	1.1	
2	354821 3		1			Clamp		
3	100015 8		2			Hex. nut		
4	322358 2		4			Tooth lockwasher		
5	378243 5		2			Plain washer		
6	120108 9		1			Hex. cap screw		
7	412159 9		12		745	Hex. cap screw		
	412610 7		12		55	Hex. cap screw		
8	120161 1		1			Hex. cap screw		
9	417623 9		1			Support		
10	395311 1		1			Exhaust pipe	0.5	
11	412160 2		12			Hex. cap screw		
12	432563 0		1			Gasket		
13	130016 6		1			Washer		
14	390822 9		1			Castle nut	1.1	
15	140116 0		1			Washer		
16	323713 7		1			Grease fitting		
17	410671 3		1			Pulley, Main drive	3.8	Mechanical drive
	397275 5		1			Pulley, Main drive		Hydrostatic drive
18	410670 1		1			Collar	4.0	
19	387761 4		1			Grease seal		
20	387783 0		1			Bearing	4.2	Mechanical drive
	398949 5		1			Bearing		Hydrostatic drive
21	306248 9		1			Flat key		
22	427226 9		1			Shaft, Engine tail	10.1	
23	389796 9		1			Shaft	1.5	
24	120111 6		6			Hex. cap screw		
25	100016 0		1			Hex. nut		
26	120099 8		8			Hex. cap screw		
27	322357 0		8			Tooth lockwasher		
28	150064 1		2			Clamp	0.7	
29	427178 6		1			Housing, Engine bell	5.5	
30	378663 5		3			Cover		
31	140045 9		16			Tooth lockwasher		
32	385985 6		1			Flexible coupling	10.1	
33	427210 6		1		745	Flange		
	456187 0		1		55	Flange		
34	034439 5		1			Bearing	9.9	
35	370011 6		1			Circlip	6.4	
36	120091 2		3			Hex. cap screw		
37	100020 9		3			Hex. nut		

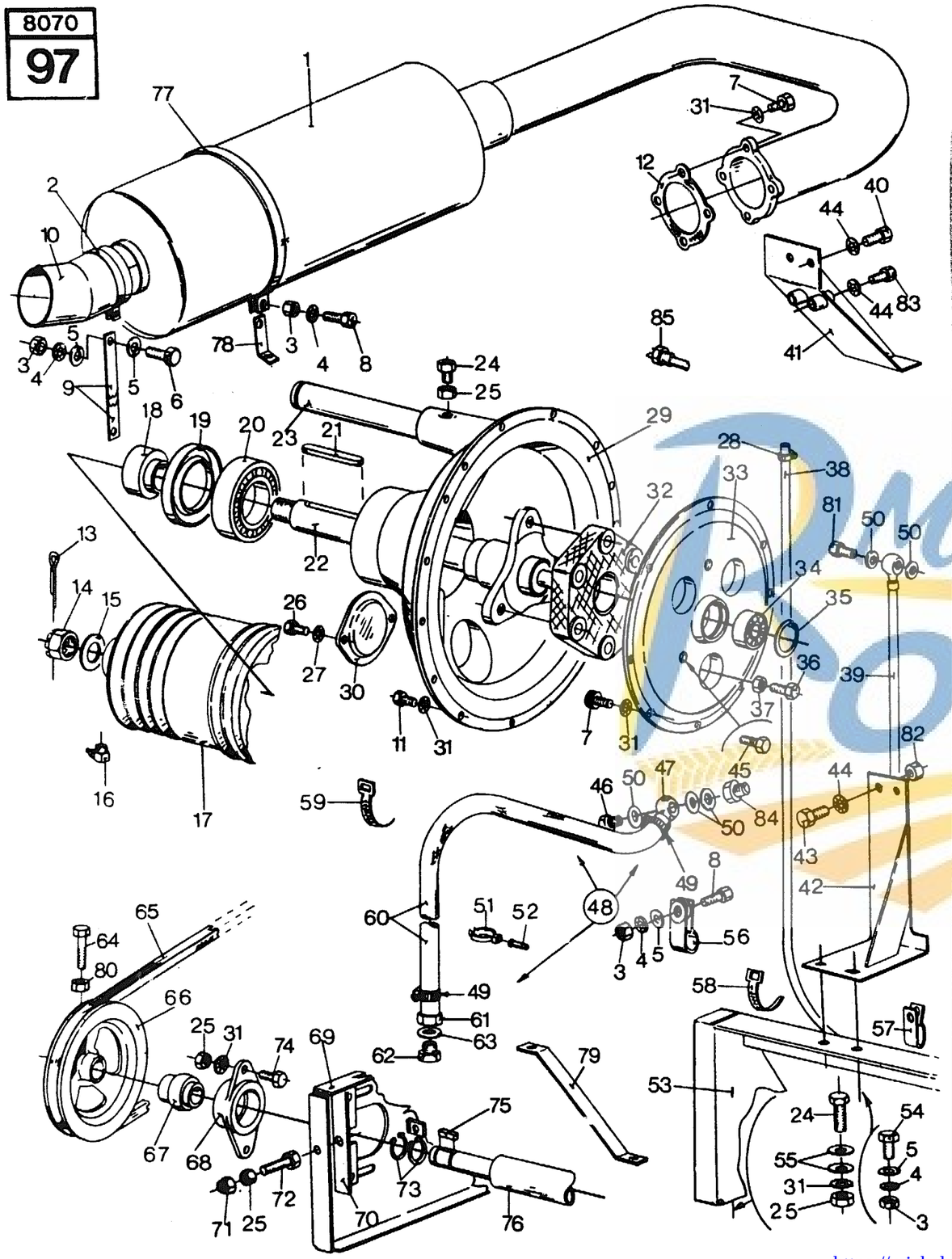

346

ATTACHING PARTS FOR FIAT 8361 I ENGINE
ACCESSOIRES POUR MOTEUR FIAT 8361 I
ZUBEHÖR FÜR FIAT MOTOR 8361 I
ACCESSORI PER MOTORE FIAT 8361 I
TOEBEHOREN VOOR FIAT 8361 I

MODEL 8070

Fig.	Order Ref.	CD	8070	8080	Code	Description		N.B.
38	160111	4	1			Pipe, Fuel oil		
39	427581	1	1			Pipe, Fuel oil (Suction)	1.0	
40	412211	1	2			Hex. cap screw		
41	427929	9	1			Engine support		
42	431368	5	1		492	Engine support		
	447340	5	1		47	Engine support		
43	412037	1	4			Hex. cap screw		
44	140046	1	10			Tooth lockwasher		
45	120090	0	3			Hex. cap screw		
46	412156	3	2		341	Hollow screw		
	120258	6	1		38	Hollow screw		
47	427776	4	1		341	Banjo connector		
	326078	2	1		38	Banjo connector		
48	432002	2	1		341	Hose assy, Oil drain		Incl.figs.47,49,60,61,62 and 63
	419448	9	1		38	Hose assy, Oil drain		
49	326082	1	2			Hose clamp	0.7	
50	220022	8	5			Seal washer		
51	326080	7	2			Spring clip		
52	130065	9	2			Rivet		
53	432029	8	1			Engine support, RH		
	432030	1	1			Engine support, LH		
54	120104	1	2			Hex. cap screw		
55	378244	7	10			Plain washer		
56	431352	2	1			Clamp		
57	431351	0	4			Clamp		
58	323597	9	1			Cable strap		
59	418407	2	2			Cable strap		
60	419447	7	1			Oil drain hose		
61	431411	8	1		341	Adapter		
	326079	4	1		38	Adapter		
62	150060	3	1			Plug		
63	220122	0	1			Seal washer		
64	120070	8	1			Hex. cap screw		
65	389245	2	1			"V" belt	0.7	
66	425909	5	1			Pulley	1.0	
67	325110	1	1			Bearing	1.7	
68	386537	8	1			Bearing housing		
69	397470	9	1			Support		
70	397465	8	1			Adjusting bracket		
71	412141	2	1			Hex. lock nut		
72	360296	6	1			Hex. cap screw		

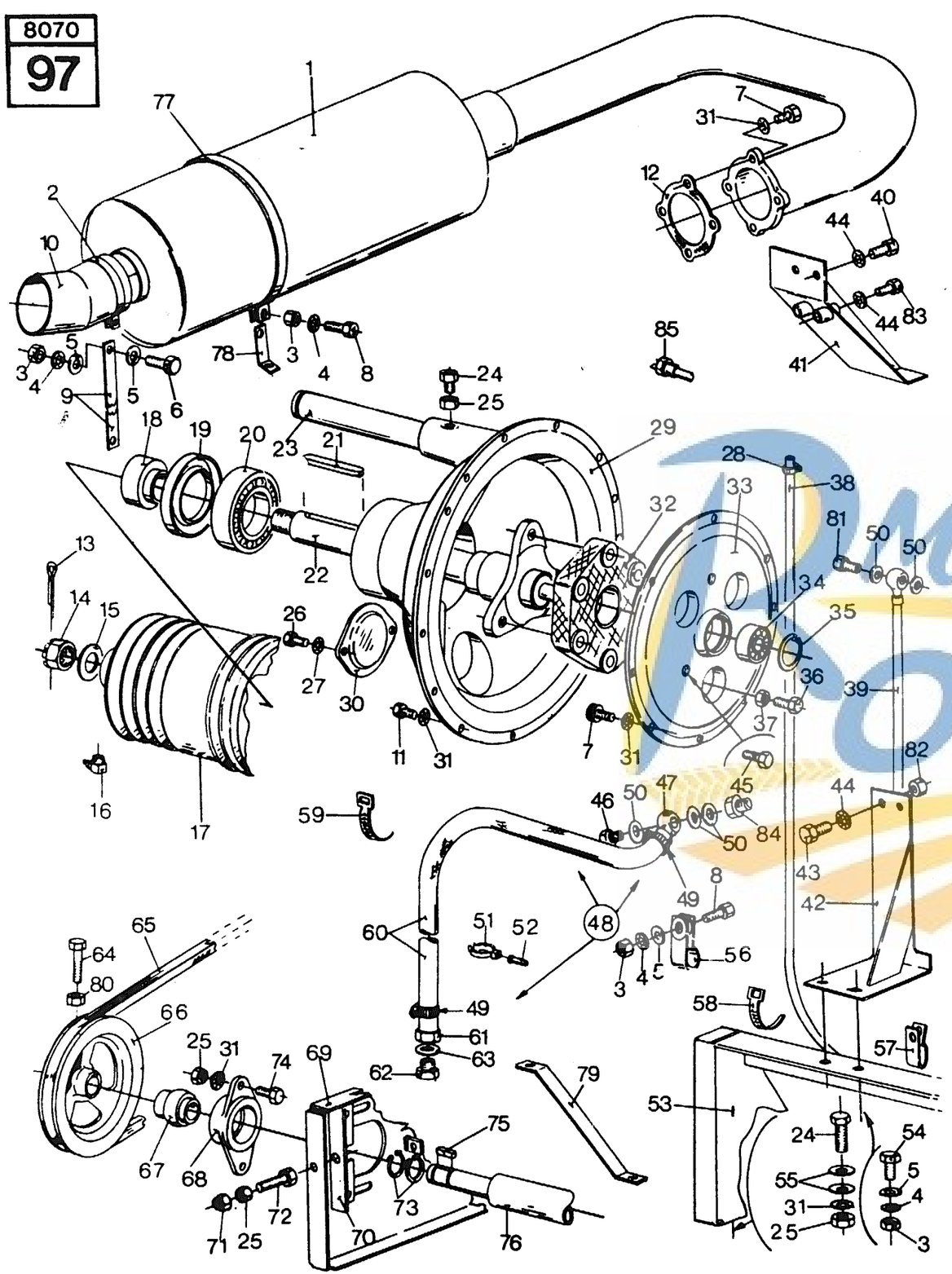

348

ATTACHING PARTS FOR FIAT 8361 I ENGINE
ACCESSOIRES POUR MOTEUR FIAT 8361 I
ZUBEHÖR FÜR FIAT MOTOR 8361 I
ACCESSORI PER MOTORE FIAT 8361 I
TOEBEHOREN VOOR FIAT 8361 I

MODEL 8070

Fig.	Order Ref.	CD	8070	8080	Code	Description	N.B
73	370003	9	1			Circlip	1.0
74	120201	7	2			Hex. cap screw	
75	170030	4	1			Flat key	1.0
76	426801	8	1			Shaft	
77	355071	3	1			Clamp	
78	410967	0	1			Support	
79	424320	6	1			Brace	
80	100037	4	1			Hex. locknut	
81	354969	5	1			Hollow screw	
82	301663	4	4			Bushing	
83	412163	8	2			Hex. cap screw	
84	441465	3	1		38	Adapter	
85	437592	6	1			Temperature element	Only with hydrostatic drive

https://michelroger.be 212

Michel ROGER GROUP

98 ➧ 104

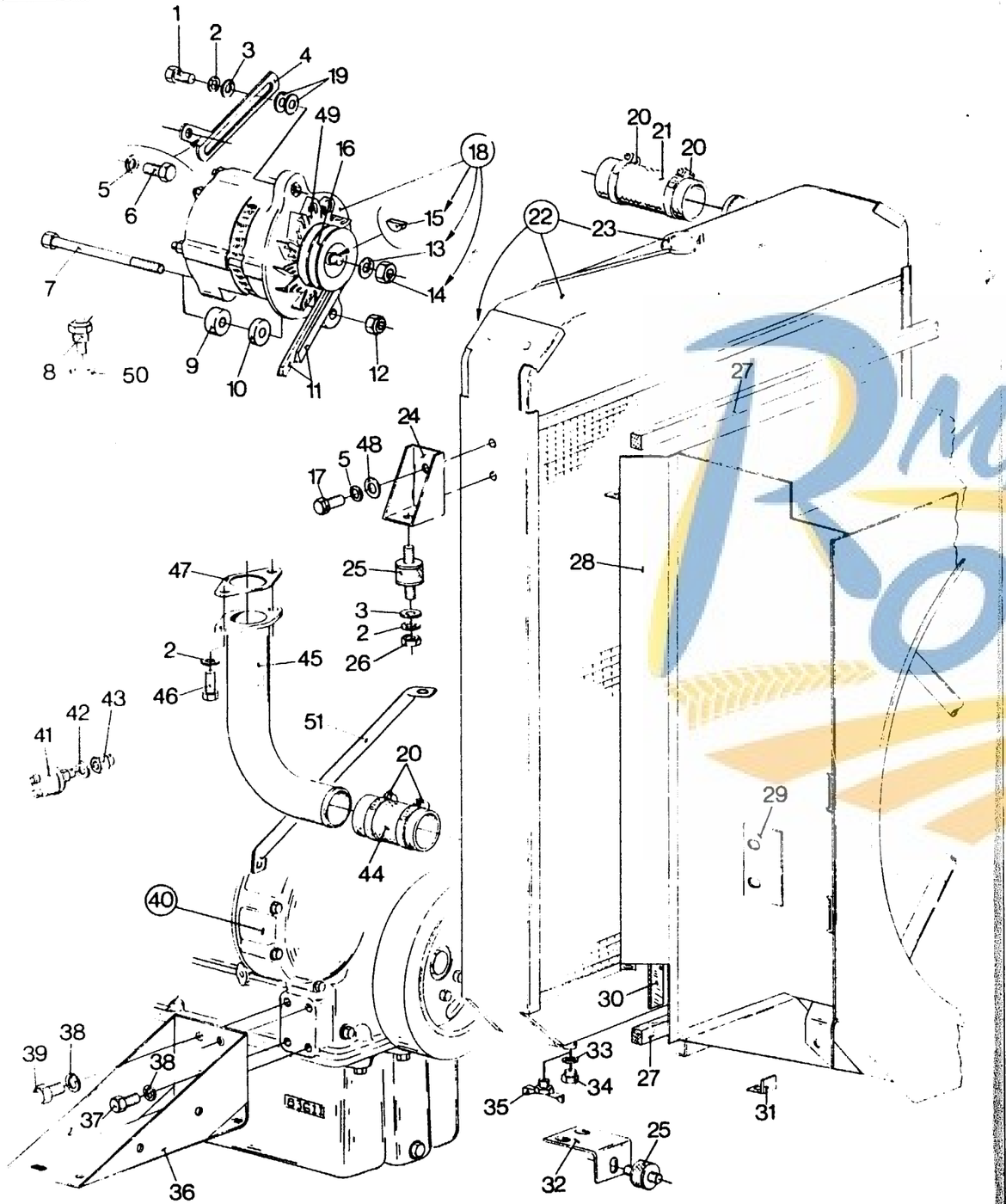

350

ATTACHING PARTS FOR FIAT 8361 I ENGINE
ACCESSOIRES POUR MOTEUR FIAT 8361 I
ZUBEHÖR FÜR MOTOR FIAT 8361 I
ACCESSORI PER MOTORE FIAT 8361 I
TOEBEHOREN VOOR MOTOR 8361 I

MODEL 8070

Fig.	Order Ref.	CD	8070	8080 Code	Description	N.B	
1	120161 1		1		Hex. cap screw		
2	322358 2		1		Tooth lockwasher		
3	378243 5		1		Plain washer		
4	411479 6		1	865	Support		
	9509505 8		1	75	Support		
5	140045 9		1		Tooth lockwasher		
6	412158 7		1		Hex. cap screw		
7	381522 2		1		Hex. cap screw		
8	427580 9		1		Sender, Water temperature		
9	427833 6		1		Spacer		
10	427834 8		3		Spacer		
11	432829 4		1		Set of 2 belts	0.7	
12	412250 3		1		Hex. lock nut		
13	140047 3		1		Tooth lockwasher		
14	100064 1		1		Hex. nut		
15	080496 1		1		Woodruff key		
16	427810 8		1	865	Pulley	1.4	
	9509398 9		1	75	Pulley	1.4	
17	300383 9		4		Hex. cap screw		
18	422746 6		1	676	Alternator assembly	1.4	Incl. figs. 13, 14, 15 and 49
	452309 6		1	865	Alternator assembly	1.4	Incl. figs. 13, 14, 15 and 49
	921383 0		1	75	Alternator assembly	1.4	Incl. figs. 13, 14, 15
19	140246 5		2		Plain washer		
20	360747 3		4		Hose clamp		
21	431911 8		1		Radiator hose		
22	427577 2		1		Radiator assembly	1.9	Incl. figs. 23, 33, 34 or 23 and 35
23	076896 3		1		Radiator cap	0.4	
24	388145 9		2		Radiator support		
25	393802 0		3		Shock absorber	0.5	
26	100015 8		4		Hex. nut		
27	388143 5		2		Sealing strip	2.0	
28	428051 9		1		Radiator cowling		Mechanical drive
29	430606 0		1		Plate		Mechanical drive
30	**NS**		2		Sealing strip	2.0	
31	399955 9		1		Bracket		Mechanical drive
32	389215 9		1		Bracket		
33	220049 4		1		Seal washer		
34	395889 4		1		Plug		
35	350187 3		1		Drain cock		
36	427972 0		1		Engine support, LH		
	427970 6		1		Engine support, RH		
37	412211 1		4		Hex. cap screw		

https://michelroger.be

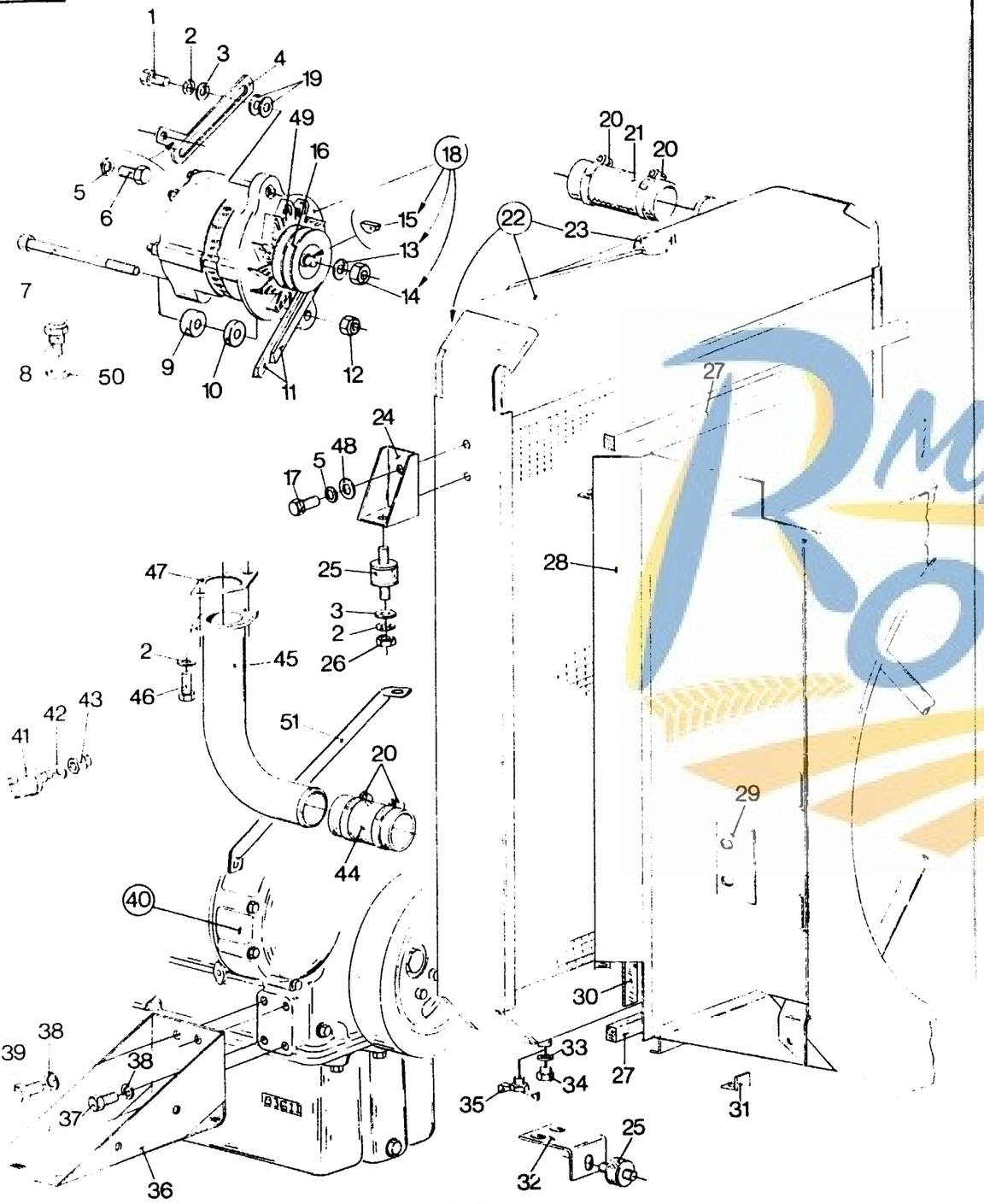

352

ATTACHING PARTS FOR FIAT 8361 I ENGINE
ACCESSOIRES POUR MOTEUR FIAT 8361 I
ZUBEHÖR FÜR MOTOR FIAT 8361 I
ACCESSORI PER MOTORE FIAT 8361 I
TOEBEHOREN VOOR MOTOR 8361 I

MODEL 8070

Fig.	Order Ref.	CD	8070	8080	Code	Description	N.B
38	140048 5		8			Tooth lockwasher	
39	412212 3		4			Hex. cap screw	
40	317785 0		1			Engine assembly, Fiat 8361 I	
41	372045 9		1			Sender, Oil pressure	
42	220105 4		1		865	Seal washer	0.4
	9511037 9		1		75	Seal washer	
43	429378 2		1			Adapter	
44	431912 0		1			Rubber hose	
45	427832 4		1			Tube	
46	120104 1		2			Hex. cap screw	
47	427829 7		1			Gasket	
48	378244 7		2			Plain washer	
49	422769 4		1		865	Alternator fan	
	9509352 3		1		75	Alternator fan	
50	220022 8		1		44	Seal washer	
51	751098 9		1		65	Bracket	

https://michelroger.be

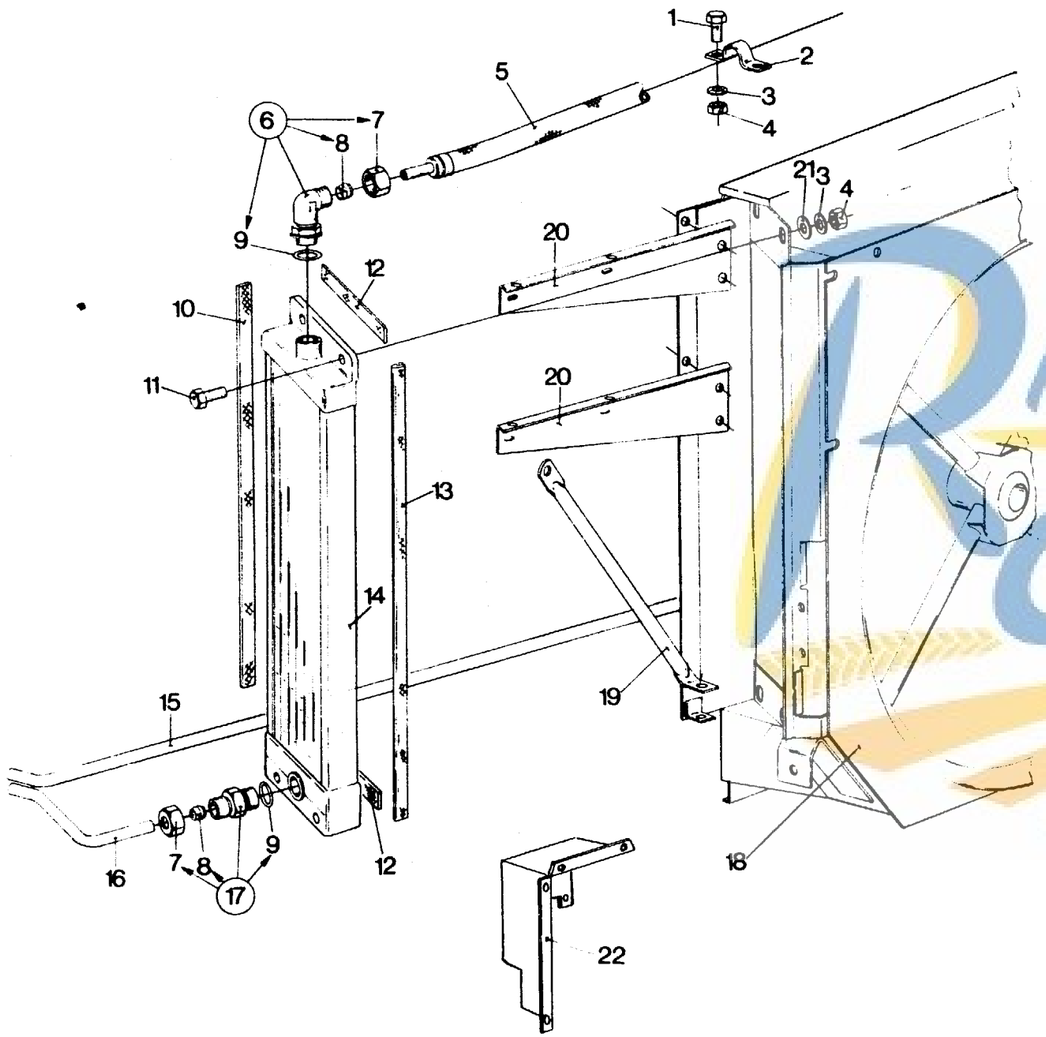

ATTACHING PARTS HYDROSTATIC DRIVE — FIAT ENGINE
ACCESSOIRES D'ENTRAINEMENT HYDROSTATIQUE — MOTEUR FIAT
ZUBEHÖR FÜR HYDROSTATISCHEN FAHRANTRIEB — FIAT MOTOR
ACCESSORI PER MANDO IDROSTATICO — MOTORE FIAT
AANBOUWDELEN HYDROSTATISCHE TRAKTIE — FIAT MOTOR

MODEL 8070

Fig.	Order Ref.	CD	8070	8080	Code	Description	N.B.
1	120103	9	2			Hex. cap screw	
2	484756	1	1			Clamp	
3	322358	2	10			Tooth lockwasher	
4	100015	8	10			Hex. nut	
5	432635	3	1			Hydraulic hose	
6	353096	3	2			Elbow	Incl.figs.7,8 and 9
7	325338	3	2			Coupler nut	
8	325339	5	2			Ferrule	
9	167266	8	2			"O" ring	
10	357467	4	2			Sealing strip	
11	120161	1	8			Hex. cap screw	
12	336524	1	4			Sealing strip	
13	430755	5	2			Sealing strip	
14	427138	2	2			Oil cooler assembly	2.6
15	NS		1			Hydr. pipe	
16	NS		1			Hydr. pipe	
17	323473	7	2			Straight connector	Incl.figs.7,8 and 9
18	430756	7	1			Radiator support	
19	443511	4	1			Brace	
20	432636	5	2		492	Support	
	449962	5	2		47	Support	
21	378243	5	8			Plain washer	
22	437059	6	1			Guard	

MICHEL ROGER

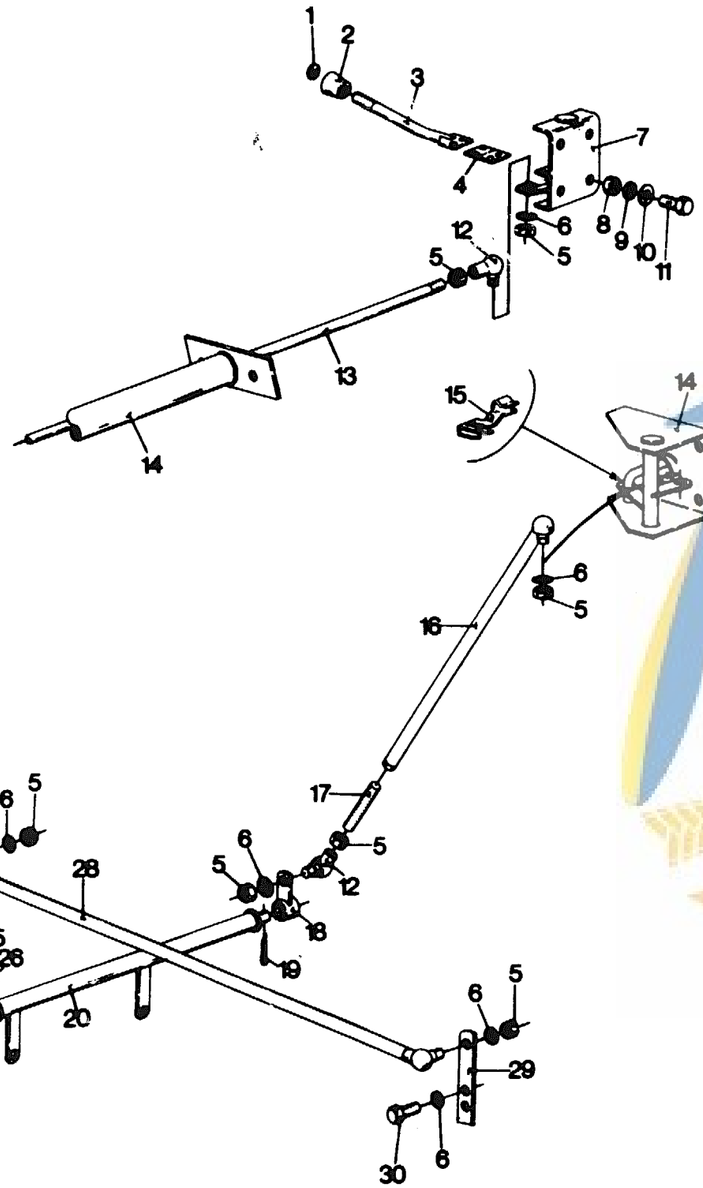

THROTTLE CONTROL FIAT TYPE 8361 I ENGINE
MANETTE DE COMMANDE DES GAZ FIAT TYPE 8361 I
GASHANDHEBEL FIAT TYP 8361 I
MANOPOLA COMANDO ACCELERATORE, MOTORE FIAT TIPO 8361 I
GASHANDGREEP FIATTYPE 8361 I

MODEL 8070

Fig.	Order Ref.	CD	8070	8080	Code	Description	N.B.
1	410223	4	1			Decal	
2	390897	6	1			Knob	
3	432017	3	1			Lever	
4	485978	2	1			Spring plate	
5	100014	6	10			Hex. nut	
6	322357	0	15			Tooth lockwasher	
7	435486	9	1			Hinge w/a	
8	100015	8	6			Hex. nut	
9	322358	2	6			Tooth lockwasher	
10	378243	5	4			Plain washer	
11	120104	1	6			Hex. cap screw	
12	350186	1	2			Ball hinge	
13	432023	6	1			Adjusting rod	
14	435378	0	1			Support tube w/a	
15	367308	0	1			Spring clip	
16	410954	3	1			Adjusting rod	
17	332198	4	1			Threaded rod	
18	334713	0	1			Lever	
19	130043	3	1			Roll pin	
20	431364	7	1			Support tube	
21	432492	9	1			Lever	
22	378245	9	1			Plain washer	
23	000016	9	1			Spring	
24	120245	9	1			Carriage bolt	
25	378244	7	1			Plain washer	
26	100037	4	1			Hex. lock nut	
27	437786	7	1			Lever	
28	432495	5	1			Connecting rod	
29	431363	5	1			Lever	
30	120099	8	10			Hex. cap screw	

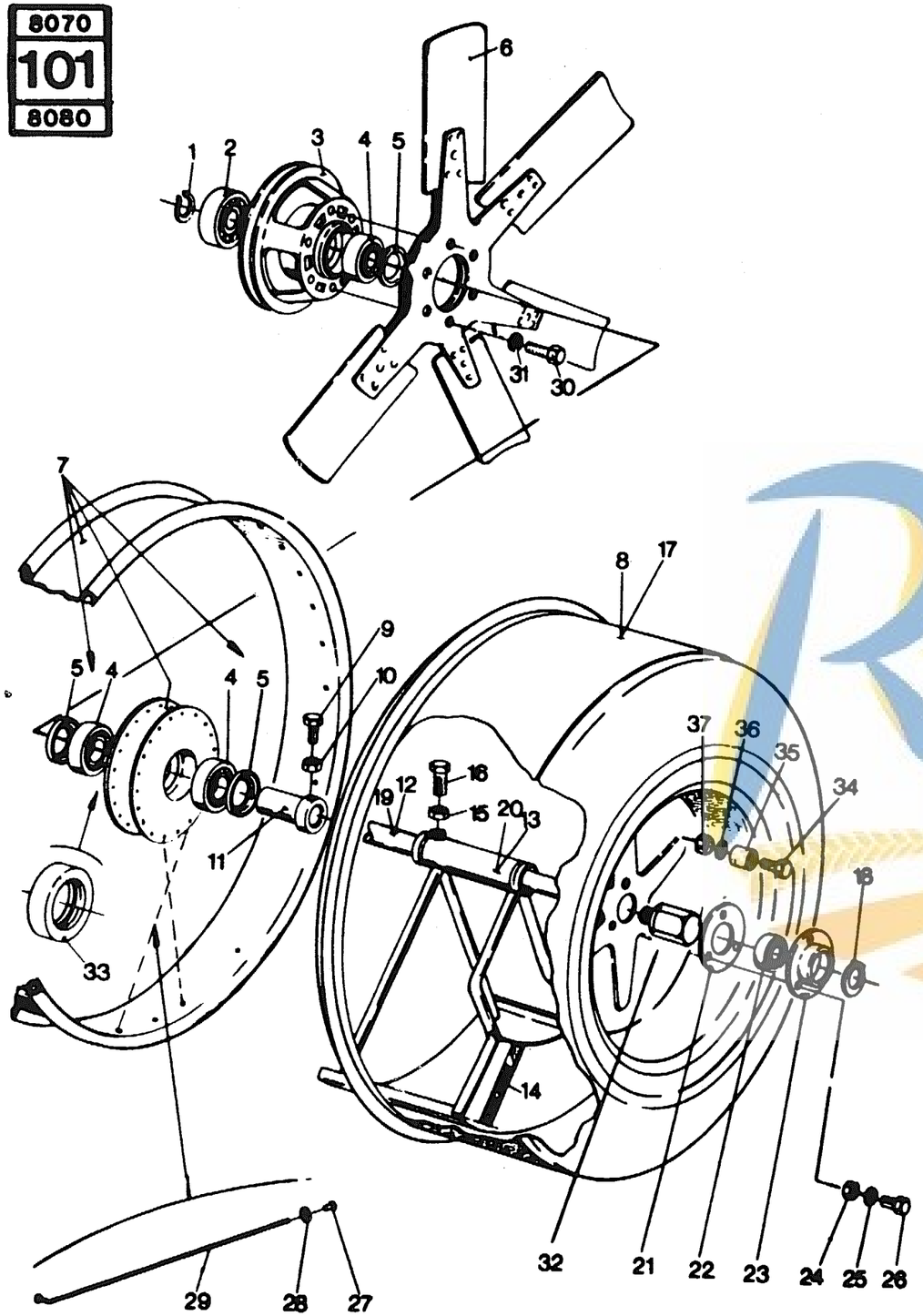

ROTARY SCREEN
TAMIS TOURNANT
DREHBARER STAUBSCHIRM
COPERCHIO ANTIPOLVERE ROTANTE
DRAAIENDE STOFKAP

MODEL 8070 - 8080

Fig.	Order Ref.	CD	8070	8080	Code	Description		N.B.
1	370004 1		1	1		Circlip	0.4	
2	025953 4		1	1		Ball bearing	1.4	
3	424366 2		1	1		"V" pulley		
4	364908 9		3	3		Ball bearing		
5	391472 7		2	2		Grease seal	1.3	
6	419679 8		1			Fan	0.7	
	364482 5			1	519	Fan		Mercedes OM 401 engine
	422785 8			1		Fan		Mercedes OM 421 and Fiat 8361 SI engine
7	396767 7		1	1		Ring assembly		Incl. figs. 4,5,11,27,28,29 and 33
8	420445 6			1		Drum		Mercedes OM 421 and Fiat 8361 SI engine
9	120161 1		1	1		Hex. cap screw		
10	100015 8		1	1		Hex. nut		
11	396766 5		1	1		Bushing	0.8	
12	396763 9		1	1	519	Shaft	1.0	Mercedes OM 401 engine
13	384703 9		1	1	519	Dust plate	0.4	Mercedes OM 401 engine — Incl. fig. 14
14	365408 0		2	2	519	Sealing strip	0.5	Mercedes 401 engine
15	100016 0		2	2		Hex. nut		
16	120111 6		2	2		Hex. cap screw		
17	384850 0		1			Drum	0.5	
	384850 0			1	519	Drum	0.5	Mercedes OM 401 engine
18	300625 3		1		346	Circlip	0.4	
	300625 3			1	329	Circlip		
19	419162 3			1		Shaft	1.0	
	396763 9		1			Shaft	1.0	
20	420442 0			1		Dust plate		Mercedes OM 421 engine - Incl. fig. 14
21	377419 7		1			Reinforcing ring	0.5	
	377419 7			1		Reinforcing ring		
22	362804 7		1	1		Ball bearing		
23	365018 3		1	1		Bearing housing		
24	100014 6		3	3		Hex. nut		
25	322357 0		3	3		Tooth lockwasher		
26	120099 8		3	3		Hex. cap screw		
27	364743 9		36	36		Spoke nut	0.5	
28	140013 2		36	36		Washer		
29	387618 1		36	36		Spoke	0.5	
30	120110 4		6	6		Hex. cap screw		

https://michelroger.be 218

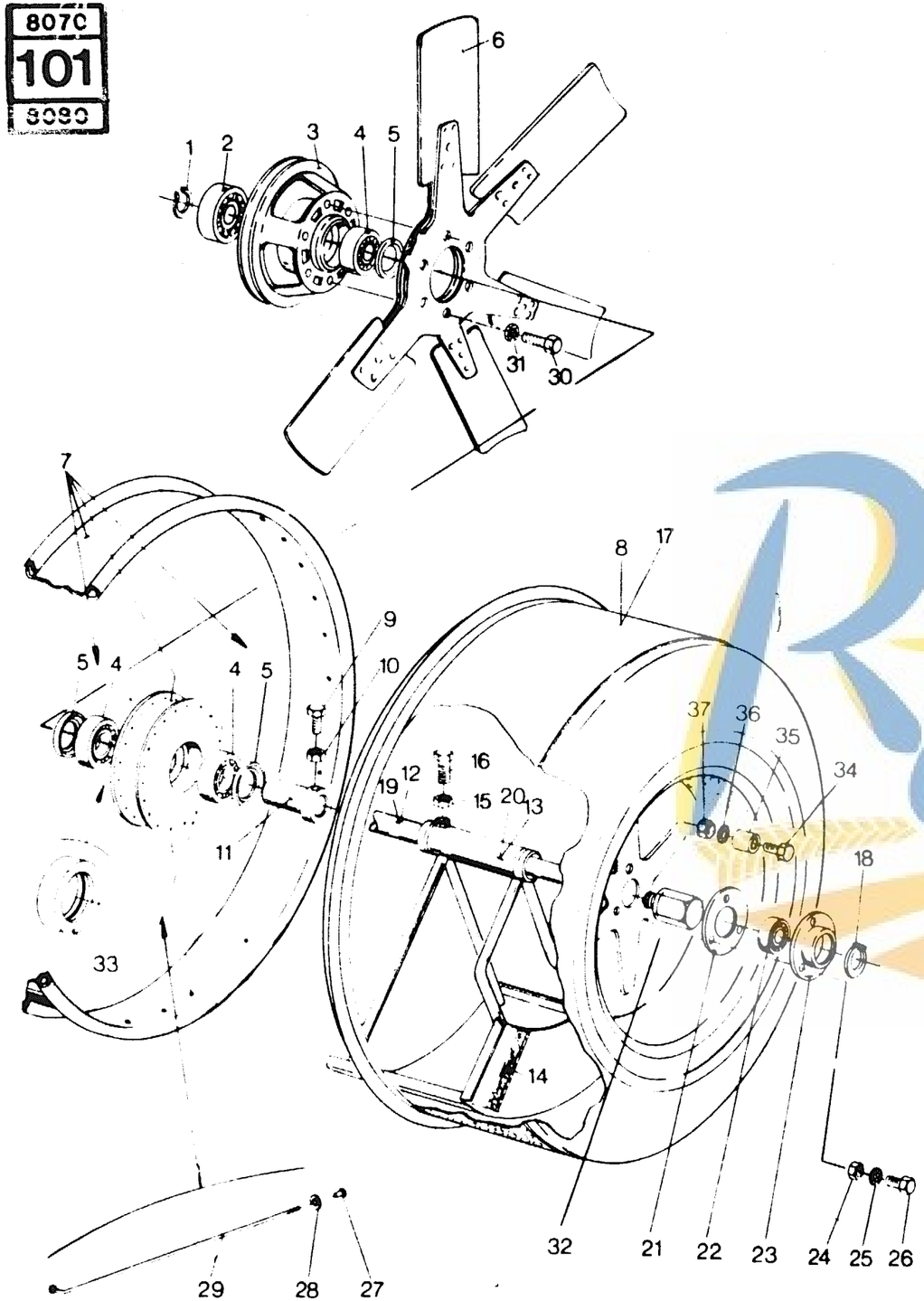

ROTARY SCREEN
TAMIS TOURNANT
DREHBARER STAUBSCHIRM
COPERCHIO ANTIPOLVERE ROTANTE
DRAAIENDE STOFKAP

MODEL 8070 - 8080

Fig.	Order Ref.	CD	8070	8080	Code	Description	N.B.
31	140045 9		6	6		Tooth lockwasher	
32	422891 3			1	329	Shaft	
	422891 3		1		346	Shaft	
33	397101 8		1	1		Bearing housing	
34	120112 8			1	39	Hex. cap screw	
	120112 8		1		43	Hex. cap screw	
35	434182 4			1	39	Bushing	
	434182 4		1		43	Bushing	
36	140046 1			1	39	Tooth lockwasher	
	140046 1		1		43	Tooth lockwasher	
37	337475 7			1	39	Hex. nut	
	337475 7		1		43	Hex. nut	

Michel ROGER

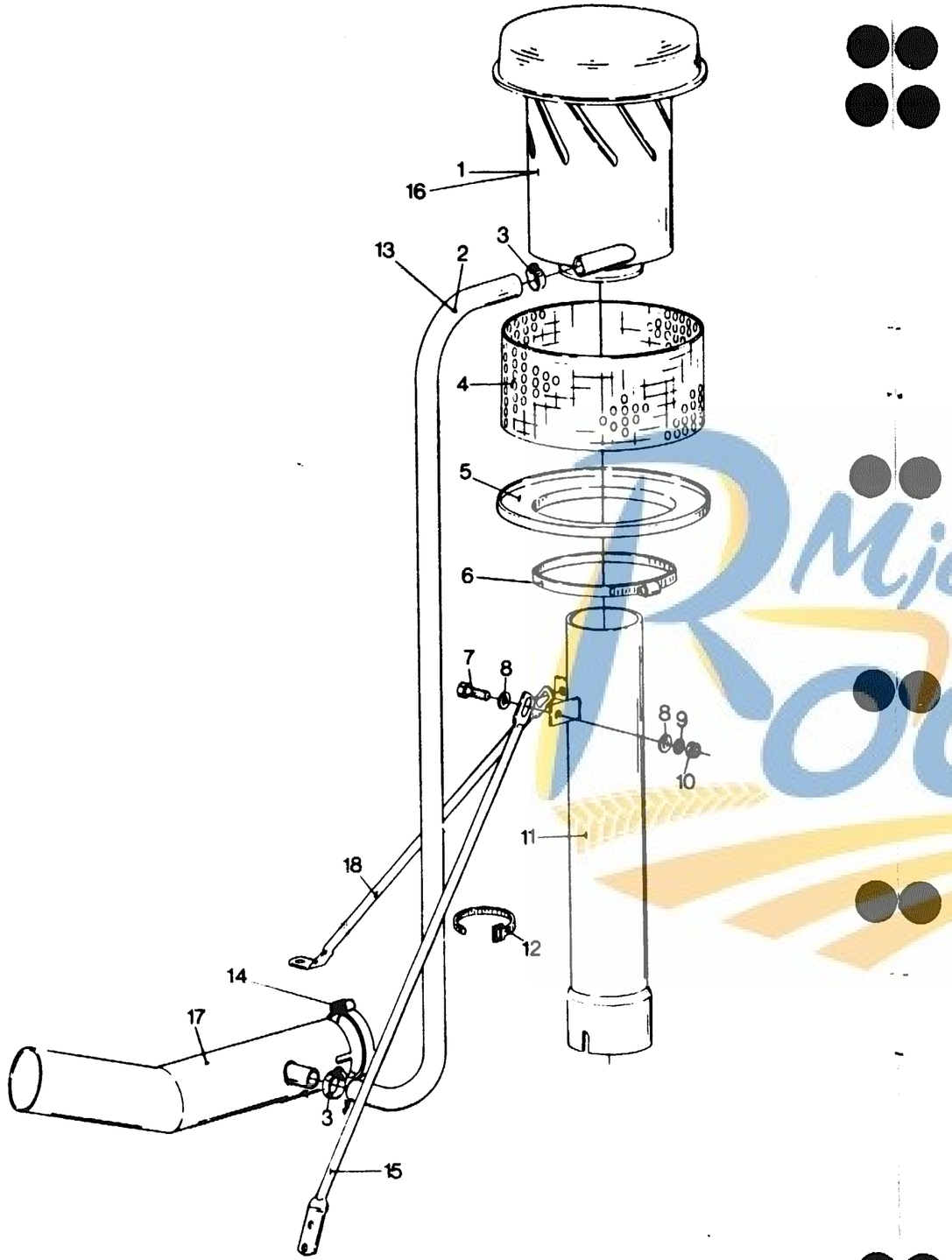

HIGH AIR FILTER
FILTRE A AIR RALLONGE
ERHÖHTER LUFTFILTER
FILTRO DELL'ARIA
VERHOOGDE LUCHTFILTER

OPTION

MODEL 8070 - 8080

Fig.	Order Ref.	CD	8070	8080	Code	Description	N.B.
1	448346	8	1	1		Filter	(A)
2	449669	3	1	1		Hose	(A)
3	382528	5	2	2		Hose clamp	(A) and (B)
4	449817	8	1	1		Screen	(A)
5	449816	6	1	1		Screen base	(A)
6	449815	4	1	1		Clamp	(A)
7	120161	1	3	3		Hex. cap screw	(A)
8	378243	5	9	9		Plain washer	(A)
9	322358	2	6	6		Tooth lockwasher	(A)
10	100015	8	6	6		Hex. nut	(A)
11	451086	1	1			Extension tube	(A)
	451024	1		1		Extension tube	(A)
12	323597	9	1	1		Cable strap	(A)
13	450873	9		1	519	Hose	(B) Mercedes OM 401 engine
14	451027	7		1	519	Clamp	(B) Mercedes OM 401 engine
15	451020	3	1		345	Brace	(A) and (B)
	458888	8	1		42	Brace	(A) and (B)
	451020	3		1	333	Brace	(A) and (B)
	458888	8		1	44	Brace	(A) and (B)
16	450417	3		1	519	Air filter	(B) Mercedes OM 401 engine
17	451089	7	1			Exhaust pipe	(A) Mercedes OM 352A engine
	451022	7		1		Exhaust pipe	(A) Mercedes OM 421 engine
	451029	1		1	519	Exhaust pipe	(B) Mercedes OM 401 engine
18	451088	5	1			Brace	(A) Mercedes OM 352A engine
	451019	0		1		Brace	(A) Mercedes OM 421 engine
	451088	5		1	519	Brace	(B) Mercedes OM 401 engine

(A) For all countries except for Austria, France, Germany, Italy and Switzerland.
(B) For all countries.

GROUP
101A

https://michelroger.be 220

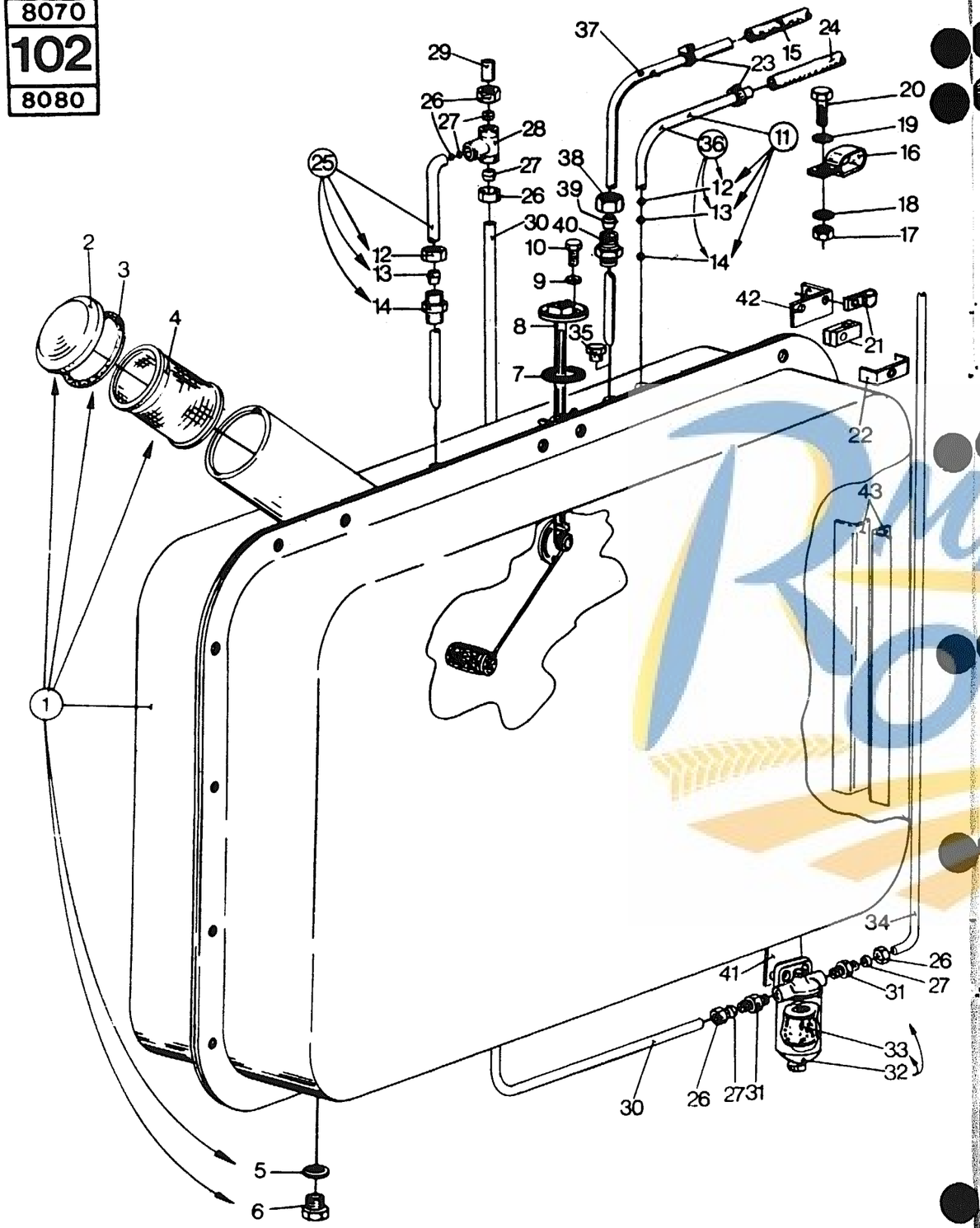

FUEL TANK
RESERVOIR DE COMBUSTIBLE
KRAFTSTOFFTANK
SERBATOIO DEL CARBURANTE
BRANDSTOFTANK

Fig.	Order Ref.	CD	8070	8080	Code	Description		N.B.
1	422385 0		1			Fuel tank	4.0	Incl. figs. 1 to 6
	316623 7			1		Fuel tank		Incl. figs. 1 to 6
	318761 1		1			Fuel tank		Incl. figs. 1 to 6 — Germany
	318760 9			1		Fuel tank		Incl. figs. 1 to 6 — Germany
2	421025 7		1	1		Cap, Fuel tank	0.4	
3	422204 8		1	1		Gasket	0.4	
4	421070 2		1	1		Filter Fuel oil		
5	220122 0		1	1		Seal washer		
6	150060 3		1	1		Plug		
7	190102 1		1	1		Gasket	0.5	
8	357692 1		1	1		Sender, Fuel level		
9	322355 6		3	3		Tooth lockwasher		
10	120202 9		3	3		Machine screw		
11	388840 3		1	1		Pipe, Fuel oil	1.0	Incl. figs. 12,13 and 14 Ford & Mercedes engines
12	100044 9		2	2		Coupler nut		
13	150013 4		2	2		Ferrule		
14	448186 8		2	2		Connector	1.0	
15	398094 2		1	1		Pipe, Fuel oil		Ford engine
	320984 7		1	1		Pipe, Fuel oil		Mercedes engine
16	391230 5		2	2		Clamp		
17	100016 0		2	2		Hex. nut		
18	140045 9		2	2		Tooth lockwasher		
19	378244 7		2	2		Plain washer		
20	120109 1		2	2		Hex. cap screw		
21	431351 0			2	611	Clamp		
	431351 0		2		851	Clamp		
	433008 5			2	56	Clamp		
	433008 5		2		71	Clamp		
22	322295 8			2	611	Bracket		
	322295 8		2		851	Bracket		
	433101 3			2	56	Bracket		
	433101 3		2		71	Clamp		
23	150064 1		5	5		Clamp		
24	160111 4		1			Pipe, Fuel oil		Mercedes & Fiat engines
	308686 9		1			Pipe, Fuel oil		Ford engine
25	427417 4		1			Pipe, Fuel oil		Incl. figs. 12,13 [illegible] 14
	437682 7			1		Pipe, Fuel oil		Incl. figs. 12,13 [illegible] 4
26	100042 5		3	3		Coupler nut		
27	150014 6		3	3		Ferrule		
28	395472 1		1	1		"T" fitting		
29	211557 0		1	1		Shaft		

https://michelroger.be 221

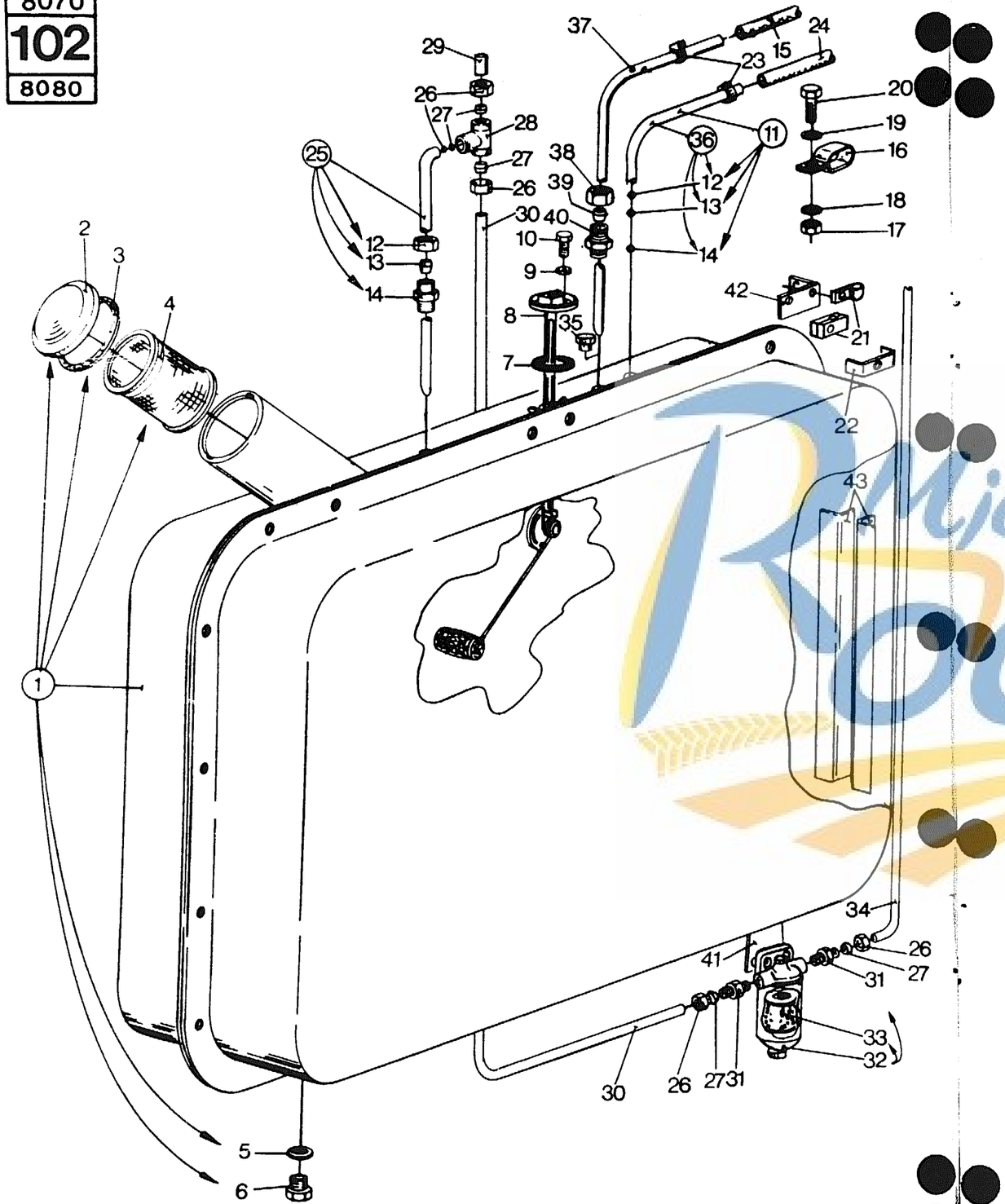

FUEL TANK
RESERVOIR DE COMBUSTIBLE
KRAFTSTOFFTANK
SERBATOIO DEL CARBURANTE
BRANDSTOFTANK

MODEL 8070 - 8080

Fig.	Order Ref.	CD	8070	8080	Code	Description	N.B
30	420523 2		1			Pipe, Fuel oil	
	437683 9			1	611	Pipe, Fuel oil	
	920228 1			1	56	Pipe, Fuel oil	
31	420522 0		1	1		Connector	
32	420491 3		1		336	Filter assembly	Incl. fig. 33
	420491 3			1	325	Filter assembly	
	424739 3		1		33	Filter assembly	Incl. fig. 33
	424739 3			1	35	Filter assembly	
33	422140 2			1	336	Filter element	
	422140 2			1	325	Filter element	
	437699 2			1	33	Filter element	
	437699 2			1	35	Filter element	
34	425560 5		1			Pipe, Fuel oil	Ford & Mercedes engines
	432665 6			1		Pipe, Fuel oil	Ford & Mercedes engines
	427581 1		1			Pipe, Fuel oil	Fiat engines
	436836 3			1		Pipe, Fuel oil	Fiat engines
35	417006 1		1	1		Plug	Fiat engines
36	427417 4		1			Pipe, Fuel oil	Incl. figs. 12, 13 and 14 – Fiat engines
37	388840 3		1		336	Pipe, Fuel oil	Ford engine
	436488 4		1		33	Pipe, Fuel oil	Ford engine
38	335135 5		1		33	Coupler nut	Ford engine
39	335136 7		1		33	Ferrule	Ford engine
40	386215 6		1		33	Straight connector	Ford engine
41	439430 6		1			Bracket	
42	447177 8			1	56	Bracket	
43	9504358 0		1		73	Support	
	9504358 0			1	58	Support	

https://michelroger.be 222

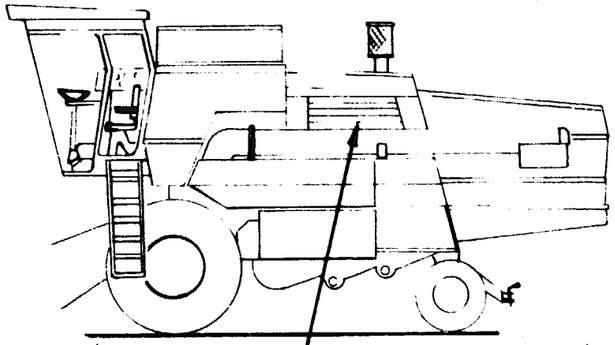

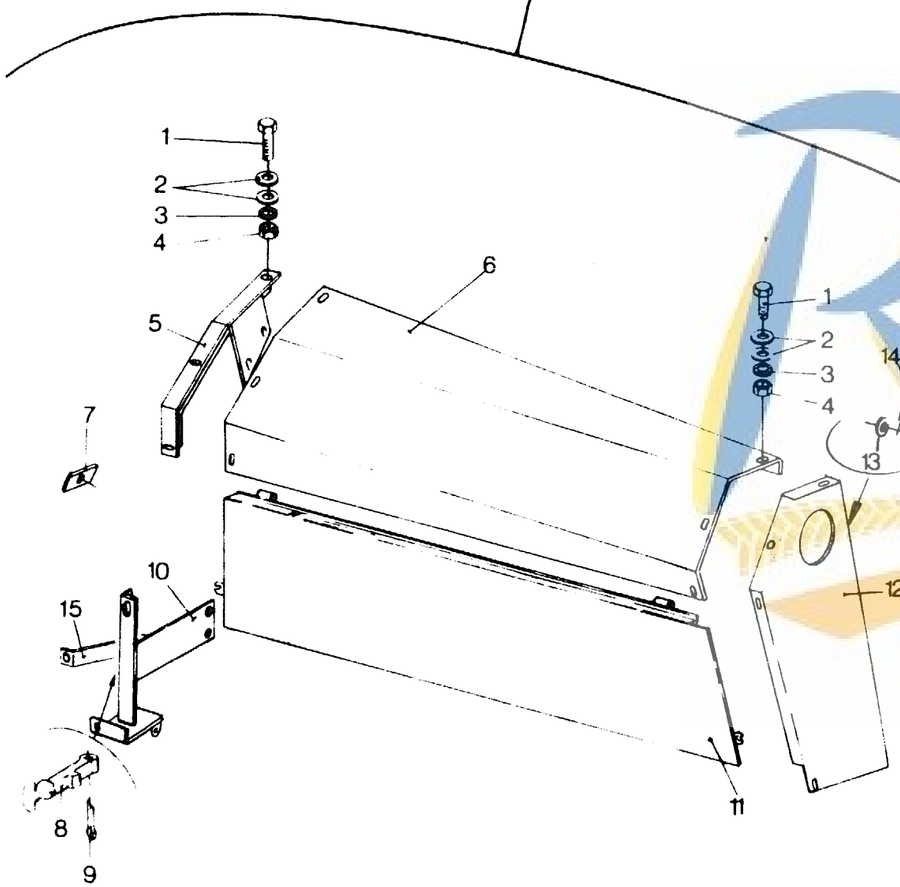

ENGINE GUARDING (LEFT-HAND)
PROTECTION POUR MOTEUR (A GAUCHE)
SCHUTZBLECHE FÜR MOTOR (LINKS)
PROTEZIONE DEL MOTORE (A SINISTRA)
AFSCHERMING MOTOR (LINKS)

MODEL 8070 - 8080

Fig.	Order Ref.	CD	8070	8080	Code	Description	N.B.
1	120099	8	16	16		Hex. cap screw	
2	140015	6	38	38		Plain washer	
3	322357	0	32	32		Tooth lockwasher	
4	100014	6	32	32		Hex. nut	
5	423608	5	1	1		Bracket	
6	432275	9	1	1		Guard	
7	333297	5	1	1		Seal plate	
8	353067	2	1	1		Rubber fastener	0.4
9	300416	0	7	7		Cotter pin	
10	435498	4	1		492	Bracket	
	449584	3	1		47	Bracket	
	435498	4		1	330	Bracket	
	449584	3		1	40	Bracket	
11	435499	6	1	1		Cover	
12	432276	1	1	1		Guard	
13	378244	7	2	2		Washer	
14	130006	5	1	1		Cotter pin	
15	449583	1	1		47	Bracket	
	449583	1		1	40	Bracket	

Michel ROGER

https://michelroger.be 223

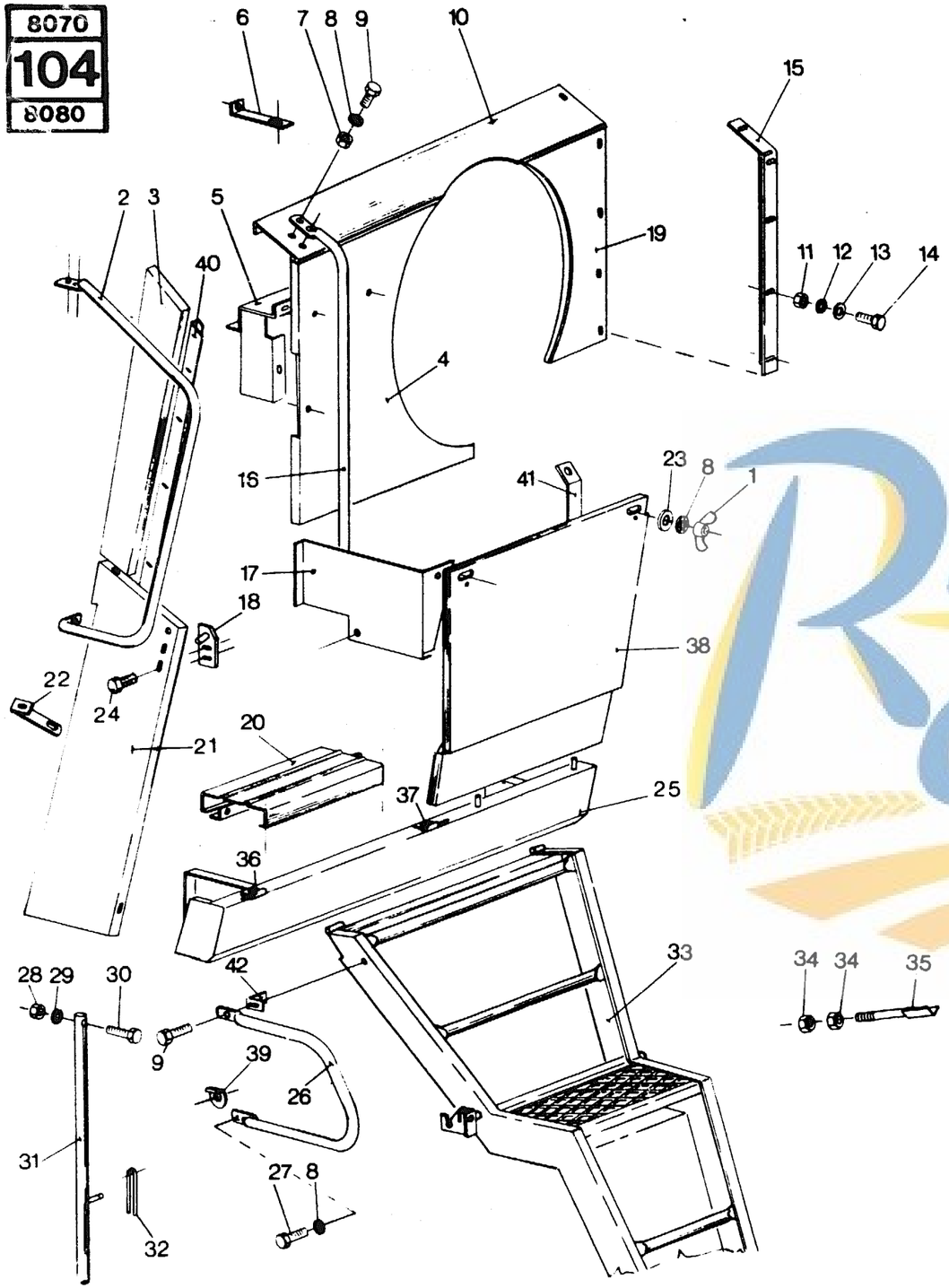

ENGINE GUARDING (RIGHT-HAND)
PROTECTION POUR MOTEUR (A DROITE)
SCHUTZBLECHE FÜR MOTOR (RECHTS)
PROTEZIONE DEL MOTORE (A DESTRA)
AFSCHERMING MOTOR (RECHTS)

MODEL 8070 - 8080

Fig.	Order Ref.	CD	8070	8080	Code	Description	N.B.
1	100005	7	2	2		Wing nut	
2	390748	1	1	1		Handrail	
3	419924	9	1	1		Guard	
4	417472	8		1		Shroud	
	389686	6	1			Shroud	
5	426238	3	1	1		Guard	
6	417471	6	1	1		Bracket	
7	100015	8	9	9		Hex. nut	
8	322358	2	9	9		Tooth lockwasher	
9	120103	9	5	5		Hex. cap screw	
10	399684	4		1	326	Guard	
	399684	4	1		343	Guard	
	444037	9		1	36	Guard	
	444037	9	1		40	Guard	
11	100014	6	20	20		Hex. nut	
12	322357	0	25	25		Tooth lockwasher	
13	140015	6	30	30		Washer	
14	120099	8	30	30		Hex. cap screw	
15	392829	5		1	326	Bracket	
	392829	5	1		343	Bracket	
	444030	5		1	36	Bracket	
	444030	5	1		40	Bracket	
16	390749	3		1		Handrail	
	395321	2	1			Handrail	
17	398384	7	1	1		Guard	
18	378857	6	1	1		Bracket	
19	399681	8		1	326	Shroud	
	399681	8	1		343	Shroud	
	444036	7		1	36	Shroud	
	444036	7	1		40	Shroud	
20	394088	5	1	1		Platform	
21	389187	8	1	1		Guard	
22	395324	8	1	1		Bracket	
23	378243	5	5	5		Plain washer	
24	308761	9	2	2		Hex. cap screw	
25	389141	2	1	1		Support	0.9 Incl. figs. 36 and 37
26	393073	[illegible]	1	1		Handrail	
27	120104	1	5	5		Hex. cap screw	
28	100016	0	11	11		Hex. cap screw	
29	140045	9	11	11		Tooth lockwasher	
30	120112	8	1	1		Hex. cap screw	
31	389744	0	1	1		Support	

https://michelroger.be 224

8070
104
8080

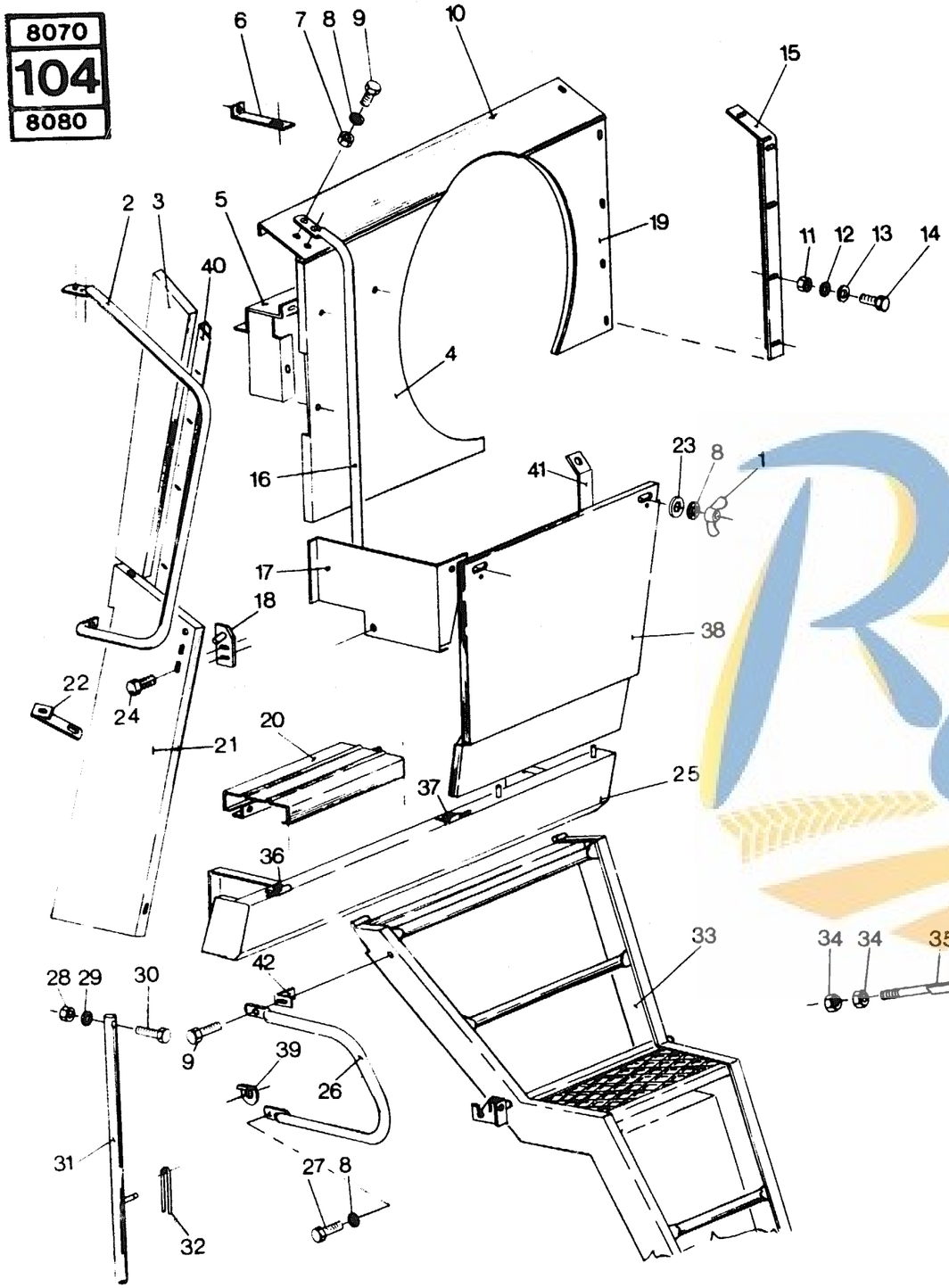

ENGINE GUARDING (RIGHT-HAND)
PROTECTION POUR MOTEUR (A DROITE)
SCHUTZBLECHE FÜR MOTOR (RECHTS)
PROTEZIONE DEL MOTORE (A DESTRA)
AFSCHERMING MOTOR (RECHTS)

MODEL 8070 - 8080

Fig.	Order Ref.	CD	8070	8080	Code	Description	N.B.
32	393992	1	1	1		Spring clip	
33	389737	5	1	1		Service ladder	0.5
34	100020	9	2	2		Hex. nut	
35	396270	4	1	1		Support	
36	396103	1	1	1		Hinge, LH	
37	396103	1	1	1		Hinge, RH	
38	390701	3	1	1		Guard	0.4
39	396418	8	1	1		Special washer	
40	419925	1	1	1		Reinforcement	
41	420139	7	1	1		Bracket	
42	399193	3	1	1		Bracket	

Michel ROGER

Michel ROGER GROUP

105 ➧ 109

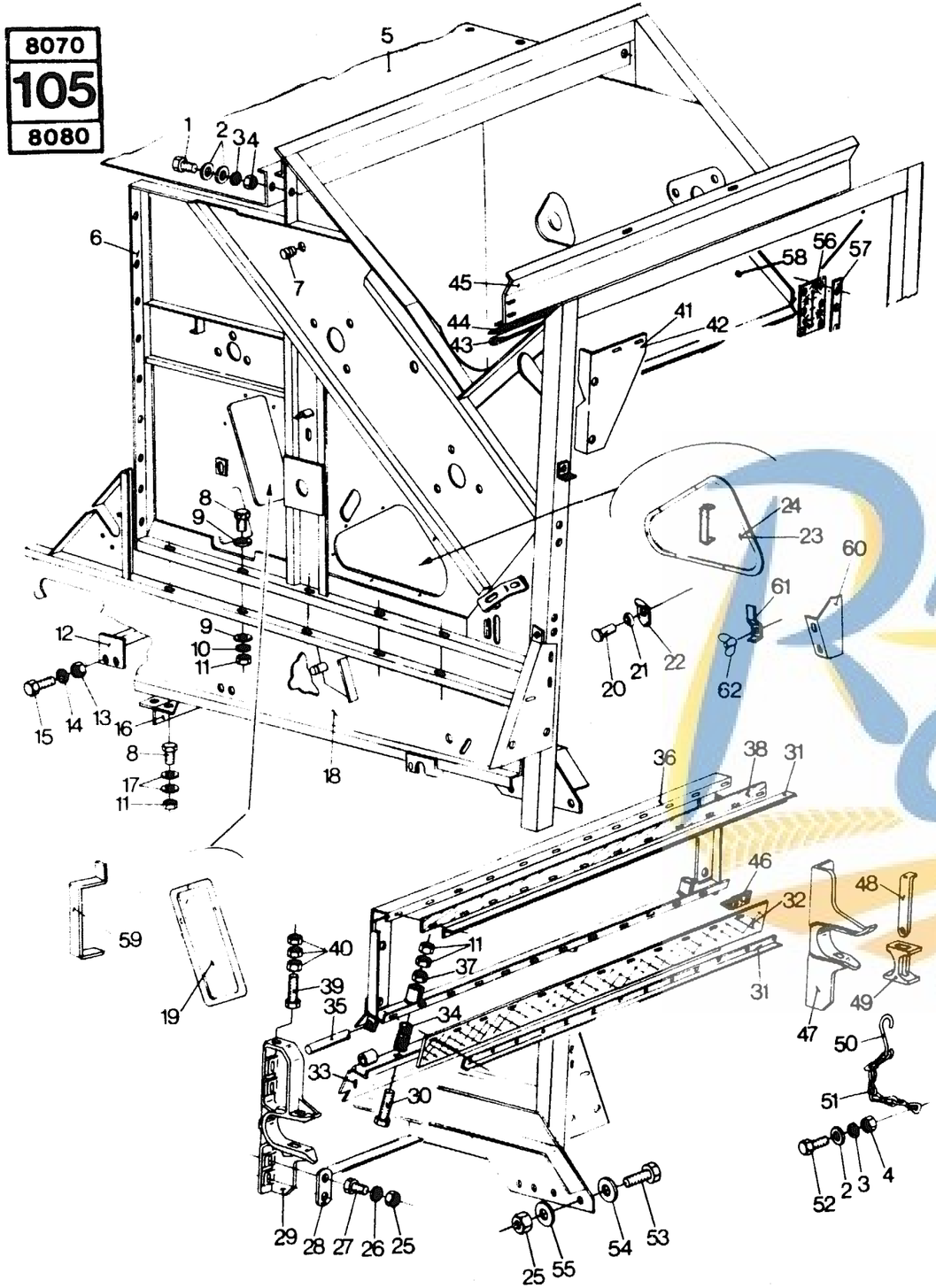

FRAME AND ATTACHING PARTS (FRONT)
CHASSIS ET FIXATIONS (AVANT)
RAHMEN UND ZUBEHÖR (VORN)
TELAIO E PARTI DEL TELAIO DAVANTI
RAAM & RAAMDELEN (VOORAAN)

MODEL 8070 - 8080

Fig.	Order Ref.	CD	8070	8080	Code	Description	N.B
1	120099 8		10	10		Hex. cap screw	
2	140015 6		10	10		Plain washer	
3	322357 0		10	10		Tooth lockwasher	
4	100014 6		10	10		Hex. nut	
5	388983 5			1		Upper plate	
	394641 9		1			Upper plate	
6	389860 6			1		Upper frame	
	394394 4		1			Upper frame	
7	336455 4		1	1		Plug	
8	120110 4		4	4		Hex. cap screw	
9	378244 7		10	10		Plain washer	
10	140045 9		10	10		Tooth lockwasher	
11	100016 0		10	10		Hex. nut	
12	394601 5		1			Support	
	392258 4			1		Support	
13	100015 8		10	10		Hex. nut	
14	322358 2		10	10		Tooth lockwasher	
15	120161 1		10	10		Hex. cap screw	
16	420455 7			1		Cross brace	
	419738 4		1			Cross brace	
17	394629 3			4		Plain washer	
	394630 6		5			Plain washer	
18	392635 4			1		Bottom frame	
	394464 3		1			Bottom frame	
19	389880 8		1	1		Cover, LH	0.4
	411349 1		1	1		Cover, RH	0.4
20	368445 1		13	13		Rivet	
21	362785 5		13	13		Cup washer	
22	362786 7		13	13		Turnbuckle	0.5
23	422160 4		1	1		Cover, LH	
24	422159 1		1	1		Cover, RH	
25	100020 9		15	15		Hex. nut	
26	140048 5		8	8		Tooth lockwasher	
27	120089 7		8	8		Hex. cap screw	
28	323598 1		2	2		Shim plate	
29	427985 7		1	1		Bracket, RH	1.0
30	120117 8		2	2		Hex. cap screw	
31	390374 8			2		Retaining strip	
	399397 5		2			Retaining strip	
32	394604 1		1		858	Sealing flap	
	922309 5		1		73	Sealing flap	
	390375 0			1	619	Sealing flap	
	9501663 4			1	58	Sealing flap	
33	390390 2			1		Dust plate	

https://michelroger.be

8070
105
8080

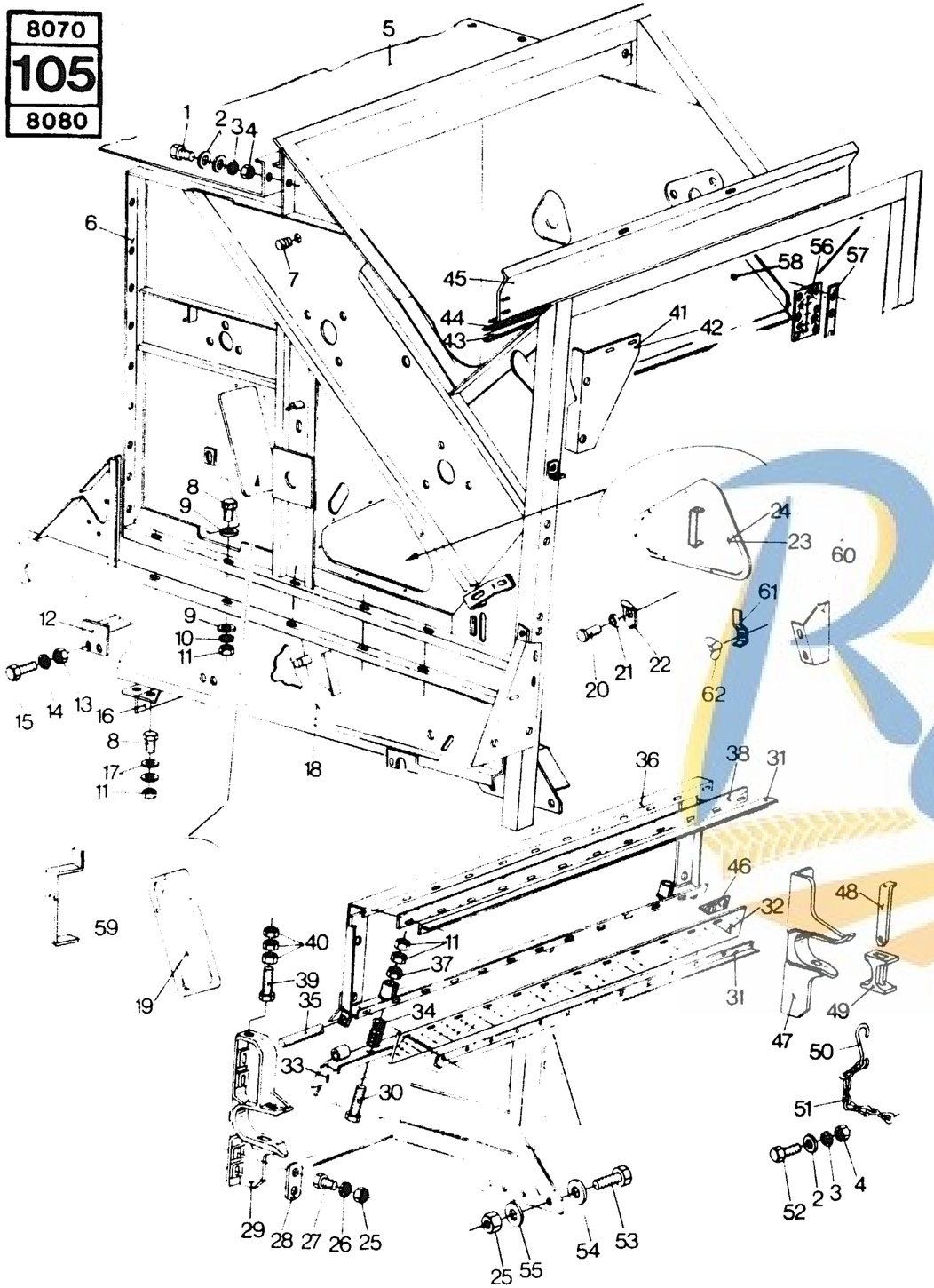

FRAME AND ATTACHING PARTS (FRONT)
CHASSIS ET FIXATIONS (AVANT)
RAHMEN UND ZUBEHÖR (VORN)
TELAIO E PARTI DEL TELAIO DAVANTI
RAAM & RAAMDELEN (VOORAAN)

MODEL 8070 - 8080

Fig.	Order Ref.	CD	8070	8080	Code	Description	N.B.
	394619	2	1			Dust plate	
34	180069	7	2	2		Spring	0.9
35	390376	2		1		Pivot shaft	
	394608	9	1			Pivot shaft	
36	390388	7		1		Cover	1.9
	394609	1	1			Cover	
37	100037	4		2		Hex. lock nut	
38	390377	4		1		Sealing flap	
	394605	3	1			Sealing flap	
39	120124	3	1	1		Hex. cap screw	
40	337475	7	3	3		Hex. nut	
41	390384	9	1	1		Support, RH	
42	390382	5	1	1		Support, LH	
43	388968	3		1	325	Retaining strip	
	394532	8	1		342	Retaining strip	
	390374	8		1	35	Retaining strip	
	399397	5	1		39	Retaining strip	
44	431057	6		1		Sealing flap	
	431056	4	1			Sealing flap	
45	417310	6		1		Dust plate	
	394613	0	1			Dust plate	
46	392644	3	2	2		Seal	
47	427986	9	1	1		Bracket, LH	1.6
48	336477	0	2	2		Key	
49	322266	7	2	2		Retainer	
50	323239	1	2	2		Hook	
51	230125	8	2	2		Chain	
52	120100	3	2	2		Hex. cap screw	
53	385923	6	6	6		Hex. cap screw	
54	333041	4	8	8		Centre ring	
55	333040	2	4	4		Centre ring	
56	389970	9	1	1		Seal	
57	389968	4	2	2		Retaining strip	
58	431058	8		1		Plate	
	431059	0	1			Plate	
59	420493	7		1	330	Bracket	
	448916	7		1	40	Bracket	
	431056	4	1		492	Bracket	
	448916	7	1		47	Bracket	
60	420389	6		1		Bracket	
	399397	5	1			Bracket	
61	425093	4	1	1		Clamp	
62	100005	7	8	8		Wing nut	

Michel Roger

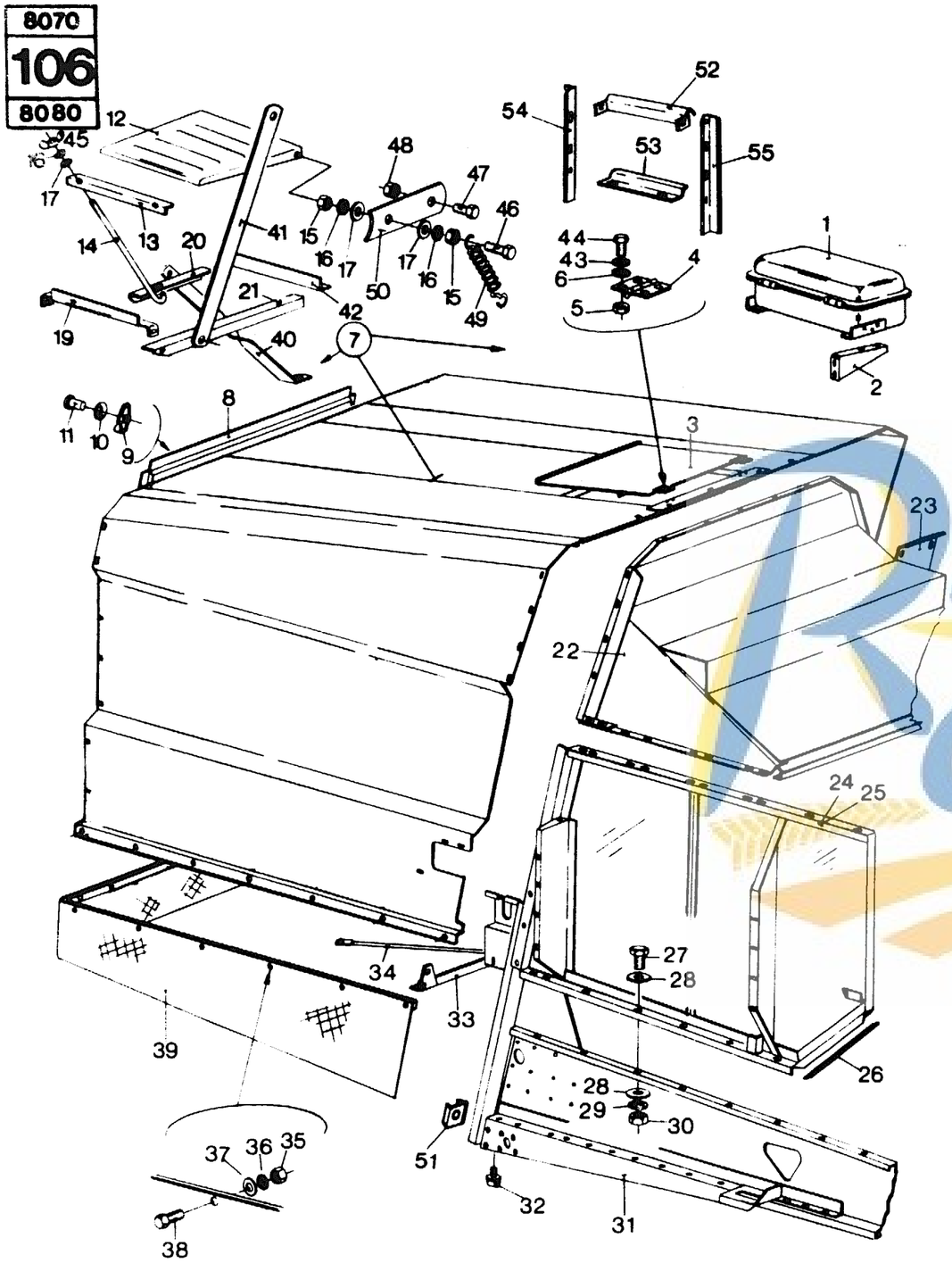

FRAME AND ATTACHING PARTS (REAR)
CHASSIS ET FIXATIONS (ARRIERE)
RAHMEN UND ZUBEHÖR (HINTEN)
TELAIO E PARTI DEL TELAIO DIETRO
RAAM & RAAMDELEN (ACHTERAAN)

Fig.	Order Ref.	CD	8070	8080	Code	Description	N.B.
1	328024 1			1		Tool box	
2	392706 5			1		Support	
3	394794 2			1		Cover	Incl. fig. 4
4	350083 3			2		Hinge	
5	100012 2			4		Hex. nut	
6	322355 6			4		Tooth lockwasher	
7	424816 7			1	330	Hood	
	449223 9			1	40	Hood	
	425877 6		1		492	Hood	
	449224 1		1		47	Hood	
8	394686 3		1		492	Cover	
	411678 8		1		47	Cover	
	390508 3			1	330	Cover	
	394686 3			1	40	Cover	
9	362786 7		13	13		Turnbuckle	0.5
10	362785 5		13	13		Cup washer	
11	368445 1		13	13		Rivet	
12	332874 8		1		745	Battery cover	72 Ah Battery
	332874 8			1	333	Battery cover	
13	332866 1		1		745	Retaining angle	
	332866 1			1	333	Retaining angle	
14	332871 2		1		745	Adjusting rod	72 Ah Battery
	332871 2			1	333	Adjusting rod	
	425460 3			1	333	Adjusting rod	88 Ah Battery
15	100014 6		20	20		Hex. nut	
16	322357 0		20	20		Tooth lockwasher	
17	140015 6		20	20		Tooth lockwasher	
18	120099 8		20	20		Hex. cap screw	
19	332865 9		1		745	Support	
	332865 9			1	333	Support	
20	391953 7		1		745	Angle support	72 Ah Battery
	391953 7			1	333	Angle support	
	425461 5			1	333	Angle support	88 Ah Battery
21	389776 7		1		745	Angle support	
	389776 7			1	333	Angle support	
22	388984 7			1		Middle cap	
	394640 7		1			Middle cap	
23	411270 4		1	1		Guard	
24	389017 9		1		492	Rear panel, RH	
	448724 0		1		47	Rear panel, RH	
	389017 9			1	330	Rear panel, RH	
	448724 0			1	40	Rear panel, RH	

https://michelroger.be

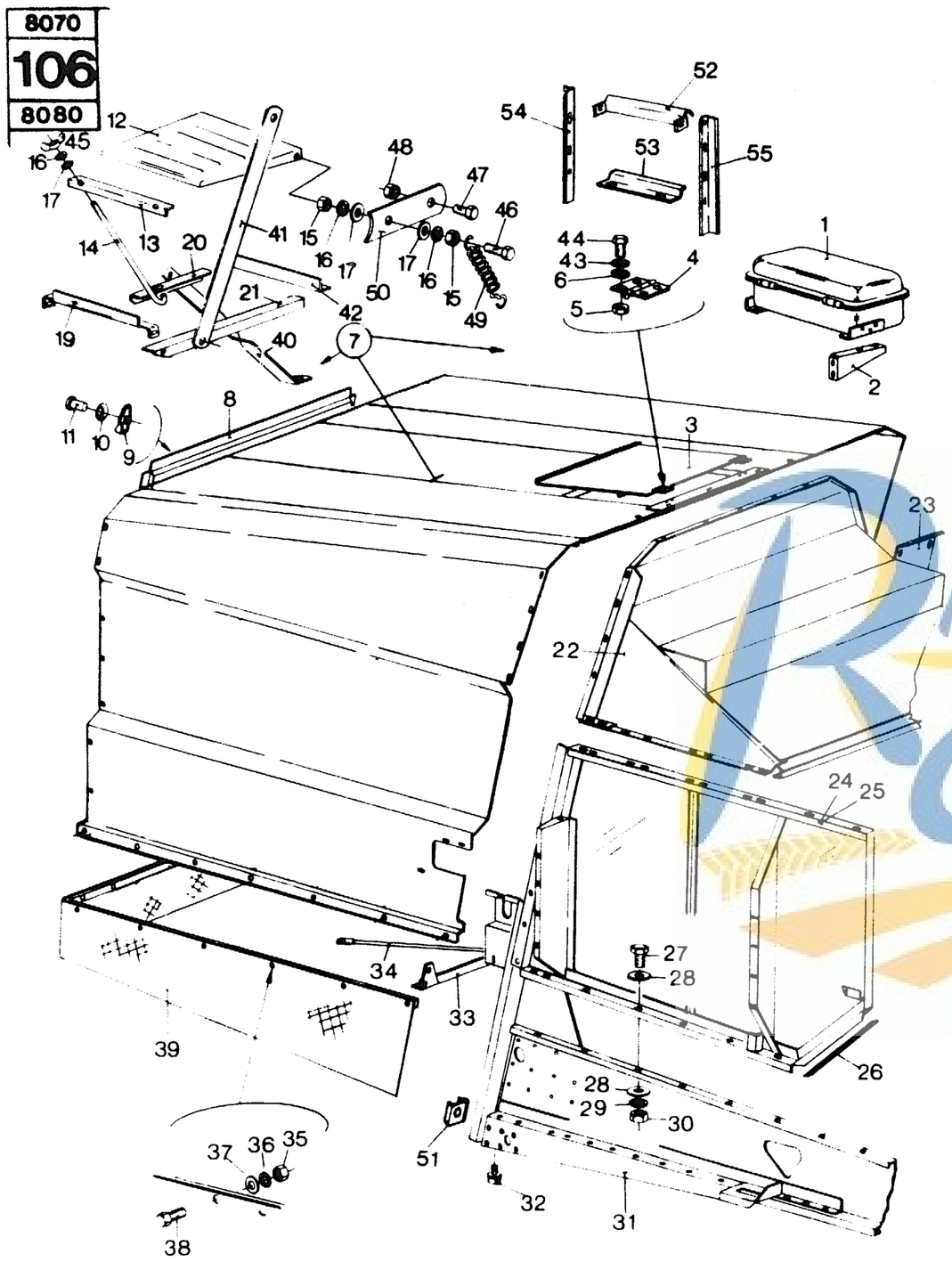

FRAME AND ATTACHING PARTS (REAR)
CHASSIS ET FIXATIONS (ARRIERE)
RAHMEN UND ZUBEHÖR (HINTEN)
TELAIO E PARTI DEL TELAIO DIETRO
RAAM & RAAMDELEN (ACHTERAAN)

MODEL 8070 - 8080

Fig.	Order Ref.	CD	8070	8080	Code	Description	N.B.
25	389025	6	1		492	Rear panel, LH	
	448725	2	1		47	Rear panel, LH	
	389025	6		1	330	Rear panel, LH	
	448725	2		1	40	Rear panel, LH	
26	393753	5	2	2		Adhesive tape	
27	120110	4	20	20		Hex. cap screw	
28	378244	7	60	60		Plain washer	
29	140045	9	30	30		Tooth lockwasher	
30	100016	0	30	30		Hex. nut	
31	392635	4		1		Lower frame	
	394464	3	1			Lower frame	
32	190029	5	2	2		Bumper	0.5
33	396463	3		1		Bracket	
	394637	0	1			Bracket	
34	396995	0	2	2		Brace	
35	100015	8	30	30		Hex. nut	
36	322358	2	30	30		Tooth lockwasher	
37	378243	5	20	20		Plain washer	
38	120161	1	30	30		Hex. cap screw	
39	397300	0	1		848	Canvas	1.1
	753147	6	1		64	Canvas	
	390492	8		1	609	Canvas	
	753146	4		1	51	Canvas	
40	390668	1	1	1		Brace	
41	389777	9	1	1		Brace	
42	356823	9	1		745	Angle	
	356823	9		1	333	Angle	
43	140013	2	5	5		Plain washer	
44	321803	6	4	4		Hex. cap screw	
45	100004	5	2		745	Wing nut	
	100004	5		2	333	Wing nut	
46	120101	5	3	3		Hex. cap screw	
47	120100	3	2	2		Hex. cap screw	
48	353308	4	2	2		Hex. lock nut	
49	180032	0	2		745	Spring	72 Ah Battery
	180032	0		2	333	Spring	
50	356830	4	2		745	Hinge plate	72 Ah Battery
	356830	4		2	333	Hinge plate	
51	432067	8	2	2		Captive nut	
52	456029	6	1		55	Bracket, upper	
	456029	6		1	44	Bracket, upper	

https://michelroger.be 230

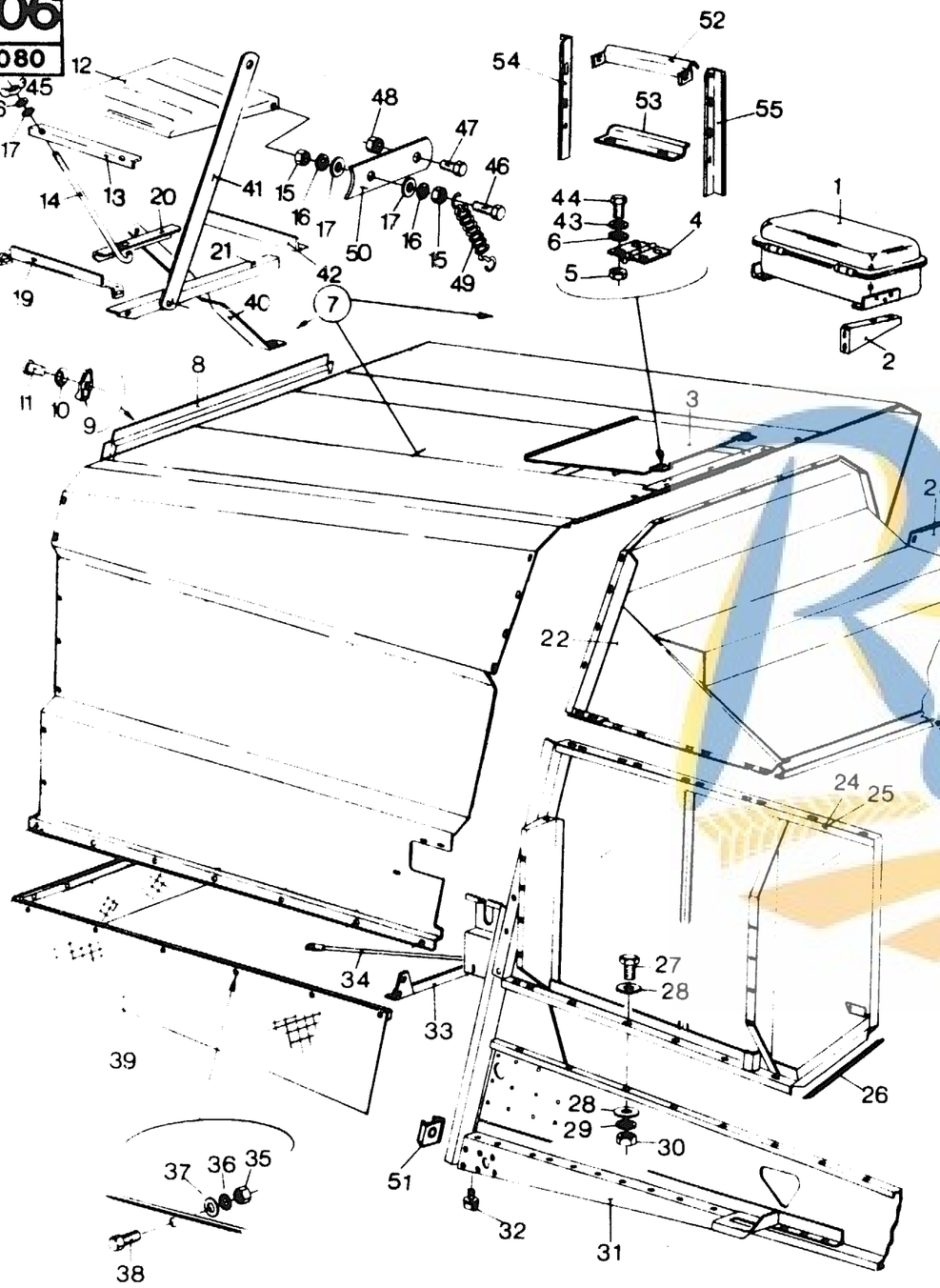

381 A

FRAME AND ATTACHING PARTS (REAR)
CHASSIS ET FIXATIONS (ARRIERE)
RAHMEN UND ZUBEHÖR (HINTEN)
TELAIO E PARTI DEL TELAIO DIETRO
RAAM & RAAMDELEN (ACHTERAAN)

MODEL 8070 - 8080

Fig.	Order Ref.	CD	8070	8080	Code	Description	N.B.
53	456028 4		1		55	Bracket, lower	
	456028 4			1	44	Bracket, lower	
54	456027 2		1		55	Support	
	456027 2			1	44	Support	
55	456025 8		1		55	Support	
	456025 8		1		44	Support	

Michel ROGER

https://michelrogerbe 231

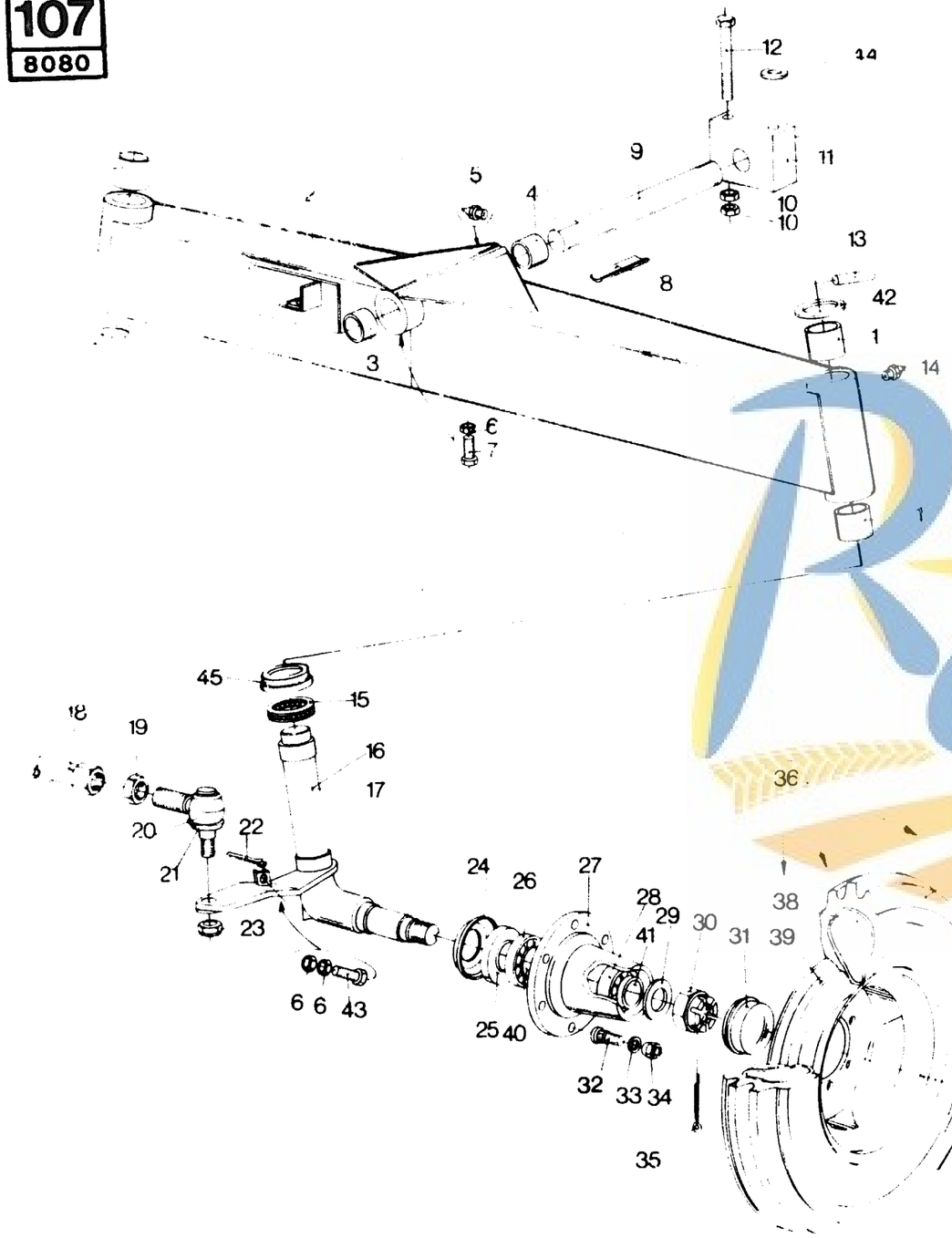

STEERING AXLE
ESSIEU DE DIRECTION
FAHRGESTELL
ASSE POSTERIORE
STUURBRUG

MODEL 8070 - 8080

Fig.	Order Ref.	CD	8070	8080	Code	Description		N.B.
1	357016 9		4		848	Bushing		
	445369 3		4		64	Bushing	0.9	
	357016 9			4	609	Bushing		
	445369 3			4	51	Bushing		
2	394762 5		1		848	Steering axle		Incl. figs. 1,3 and 4
	456857 1		1		64	Steering axle	1.0	Incl. figs. 1,3 and 4
	394993 4			1	609	Steering axle		Incl. figs. 1,3 and 4
	456856 9			1	51	Steering axle		Incl. figs. 1,3 and 4
3	357500 6		1	1		Bushing	1.1	
4	394768 7		1	1		Bushing		
5	321204 6		1	1		Grease fitting		
6	337475 7		6	6		Hex. nut		
7	300389 1		2		848	Hex. cap screw		
	120120 5		2		64	Hex. cap screw		
	300389 1			2	609	Hex. cap screw		
	120120 5			2	51	Hex. cap screw		
8	388085 1		1	1		Spacer plate		
9	411334 0		1	1		Shaft	0.7	
10	100020 9		8	8		Hex. nut		
11	411310 0		2	2		Pivot retainer		
12	394674 8		2		848	Hex. cap screw		
	412587 6		2		64	Hex. cap screw		
	394674 8			2	609	Hex. cap screw		
	412587 6			2	51	Hex. cap screw		
13	062218 1		2	2		Roll pin		
14	323787 2		2		848	Grease fitting		
	323713 7		2		64	Grease fitting		
	323787 2			2	609	Grease fitting		
	323713 7			2	51	Grease fitting		
15	394329 7		2		848	Bearing	0.8	
	301202 8		2		64	Bearing		
	394329 7			2	609	Bearing		
	301202 8			2	51	Bearing		
16	388091 4		1		848	Spindle, RH	1.4	
	449793 6		1		64	Spindle, RH		
	388091 4			1	609	Spindle, RH		
	449793 6			1	51	Spindle, RH		
17	388090 2		1		848	Spindle, LH		
	449792 4		1		64	Spindle, LH		
	388090 2			1	609	Spindle, LH		
	449792 4			1	51	Spindle, LH		
18	394988 3			1		Tie rod		

MICHEL ROGER

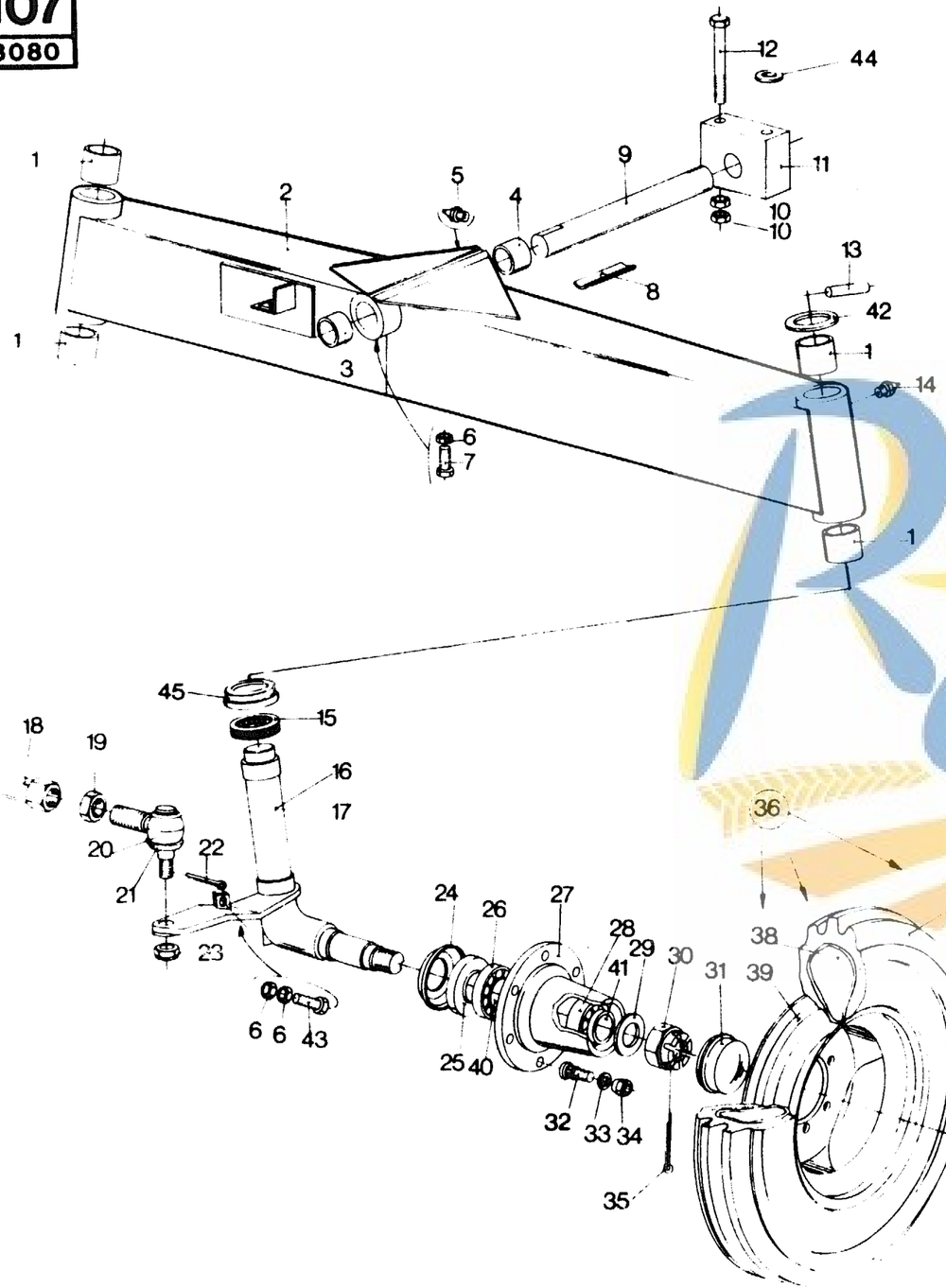

STEERING AXLE
ESSIEU DE DIRECTION
FAHRGESTELL
ASSE POSTERIORE
STUURBRUG

MODEL 8070 - 8080

Fig.	Order Ref.	CD	8070	8080	Code	Description		N.B.
	394758 6		1			Tie rod		
19	100033 6		2	2		Hex. jam nut		
20	350679 6		2	2		Ball joint	0.7	Incl. figs. 21,22 and 23
21	190126 1		2	2		Rubber cap		
22	130008 9		2	2		Cotter pin		
23	100036 2		2	2		Hex. slotted nut		
24	357733 9		2	2		Dust cap	0.8	
25	357240 4		2	2		Grease seal		
26	199955 7		2	2		Bearing cup		
27	357468 6		2		848	Wheel hub	1.0	
	445399 6		2		64	Wheel hub		
	357468 6			2	609	Wheel hub		
	445399 6			2	51	Wheel hub		
28	048976 9		2	2		Bearing		
29	378248 5		2		848	Washer		
	304060 9		2		64	Washer		
	378248 5			2	609	Washer		
	304060 9			2	51	Washer		
30	309090 7		2	2		Hex. slotted nut		
31	321148 6		2	2		Cap		
32	357238 9		12	12		Wheel bolt	0.4	
33	374503 3		12	12		Lockwasher		
34	374504 5		12	12		Wheel nut		
35	130011 6		2	2		Cotter pin		
36	NS					Wheel assembly		Incl. figs. 37,38 and 39
37	—					Tyre		See group 109
38	—					Inner tube		See group 109
39	—					Wheel rim		See group 109
40	199954 5		2	2		Bearing cone	0.8	
41	048977 1		2	2		Bearing cone		
42	140128 5		2		848	Washer		
	443076 0		2		64	Bushing		
	140128 5			2	609	Bushing		
	443076 0			2	51	Bushing		
43	120122 9		2	2		Hex. cap screw		
44	394631 8		4	4		Washer		
45	357732 /		2		64	Bearing flange		
	357732 7			2	51	Bearing flange		

https://michelroger.be

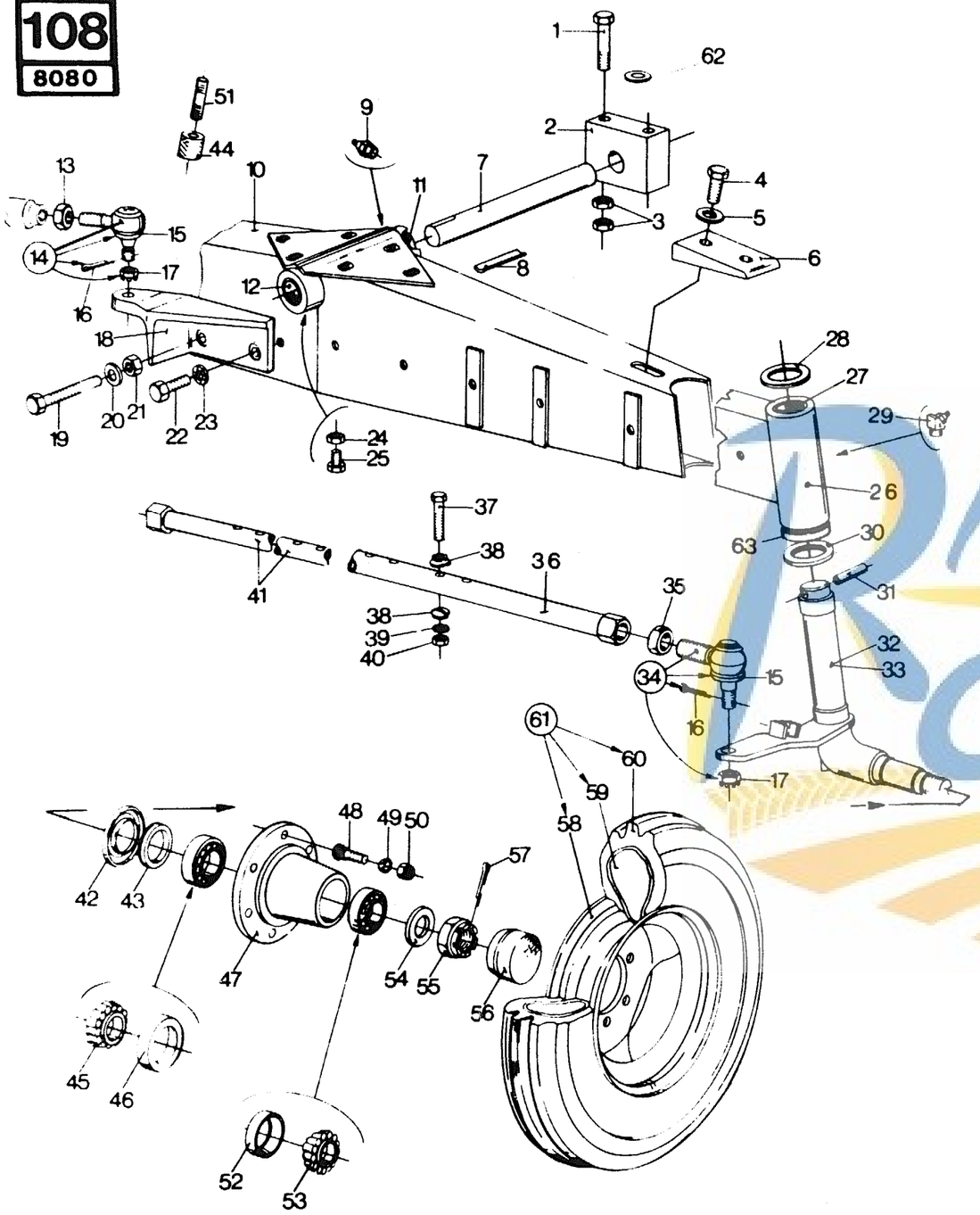

ADJUSTABLE STEERING AXLE
ESSIEU DE DIRECTION REGLABLE
REGULIERBARE FAHRGESTELL
ASSE POSTERIORE REGOLABILE
REGELBARE STUURBRUG

MODEL 8070 - 8080

Fig.	Order Ref.	CD	8070	8080	Code	Description		N.B.
1	412587	0	4	4		Hex. cap screw		
2	411310	9	2	2		Pivot retainer		
3	100020	7	9	9		Hex. nut		
4	374888	6	2	2		Hex. cap screw		
5	140091	6	2	2		Plain washer		
6	388016	0	2	2		Wedge		
7	411334	1	1	1		Shaft	0.7	
8	388085	6	1	1		Spacer plate		
9	321204	1	1	1		Grease fitting		
10	388009	7	1		848	Steering axle	1.7	Incl. figs. 11 and 12
	441990	6	1		64	Steering axle		Incl. figs. 11 and 12
	388009	7		1	609	Steering axle		Incl. figs. 11 and 12
	441990	6		1	51	Steering axle		Incl. figs. 11 and 12
11	394768	6	1	1		Bushing	1.1	
12	357500	8	1	1		Bushing		
13	331209	1	1	1		Hex. jam nut		
14	321150	1	1	1		Ball joint	0.7	Incl. figs. 15,16 and 17
15	190126	1	2	2		Rubber cap		
16	130008	1	2	2		Cotter pin		
17	100036	2	2	2		Hex. castle nut		
18	379247	4	1		848	Cylinder support	0.9	
	451102	7	1		64	Cylinder support		
	379247	4		1	609	Cylinder support		
	451102	7		1	51	Cylinder support		
19	392531	4	6	6		Hex. cap screw		
20	122432	8	6	6		Plain washer		
21	392530	2	6	6		Hex. nut		
22	120089	7	1	1		Hex. cap screw		
23	140048	5	1	1		Tooth lockwasher		
24	337475	7	2	2		Hex. nut		
25	300389	1	2		848	Hex. cap screw		
	120120	5	2		64	Hex. cap screw		
	300389	1		2	609	Hex. cap screw		
	120120	5		2	51	Hex. cap screw		
26	388014	2	2		848	Axle extension	1.6	Incl. fig. 27
	441981	7	2		64	Axle extension	1.6	Incl. fig. 27
	388014	2		2	609	Axle extension	1.6	Incl. fig. 27
	441981	7		2	51	Axle extension	1.6	Incl. fig. 27
27	357016	9	4		848	Bushing	0.9	
	445369	3	4		64	Bushing	0.9	
	357016	9		4	609	Bushing	0.9	
	445369	3		4	51	Bushing	0.9	

https://michelroger.be 234

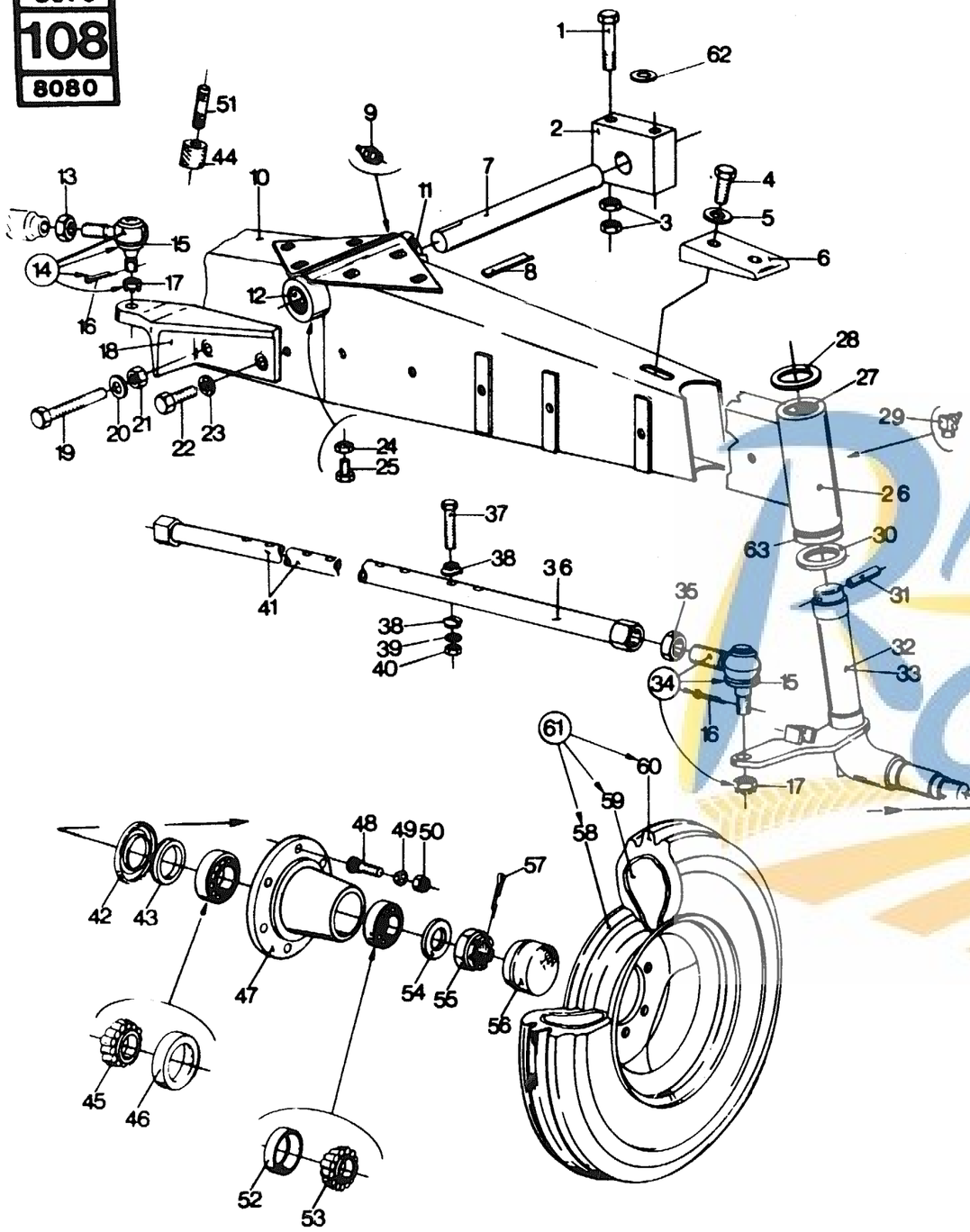

ADJUSTABLE STEERING AXLE
ESSIEU DE DIRECTION REGLABLE
REGULIERBARE FAHRGESTELL
ASSE POSTERIORE REGOLABILE
REGELBARE STUURBRUG

MODEL 8070 - 8080

Fig.	Order Ref.	CD	8070	8080	Code	Description	N.B.
28	140128 5		2		848	Washer	
	443076 0		2		64	Washer	
	140128 5			2	609	Washer	
	443076 0			2	51	Washer	
29	323787 2		2		848	Grease fitting	
	323713 7		2		64	Grease fitting	
	323787 2			2	609	Grease fitting	
	323713 7			2	51	Grease fitting	
30	394329 7		2		848	Bearing	0.8
	301202 8		2		64	Bearing	
	394329 7			2	609	Bearing	
	301202 8			2	51	Bearing	
31	062218 1		2	2		Roll pin	
32	388090 2		1		848	Spindle, LH	1.4
	449792 4		1		64	Spindle, LH	
	388090 2			1	609	Spindle, LH	
	449792 4			1	51	Spindle, LH	
33	388091 4		1		848	Spindle, RH	1.4
	449793 6		1		64	Spindle, RH	
	388091 4			1	609	Spindle, RH	
	449793 6			1	51	Spindle, RH	
34	350679 6		2	2		Ball joint	0.7 Incl. figs. 15,16 and 17
35	100033 6		2	2		Hex. jam nut	
36	388096 4		1	1		Tie rod	1.3
37	120116 6		3	3		Hex. cap screw	
38	379401 2		6	6		Clamp	
39	140045 9		3	3		Tooth lockwasher	
40	100016 0		3	3		Hex. nut	
41	388099 0		1	1		Tie rod	
42	357733 9		2	2		Dust seal	0.8
43	357240 4		2	2		Grease seal	
44	417299 0		2	2		Steel block	
45	199954 5		2	2		Bearing cone	0.8
46	199955 7		2	2		Bearing cup	
47	357468 6		2		347	Wheel hub	1.0
	445399 6		2		44	Wheel hub	
	357468 6			2	329	Wheel hub	
	445399 6			2	39	Wheel hub	
48	357238 9		12		347	Wheel bolt	
	445763 9		12		44	Wheel bolt	
	357238 9			12	329	Wheel bolt	
	445763 9			12	39	Wheel bolt	

https://michelroger.be 235

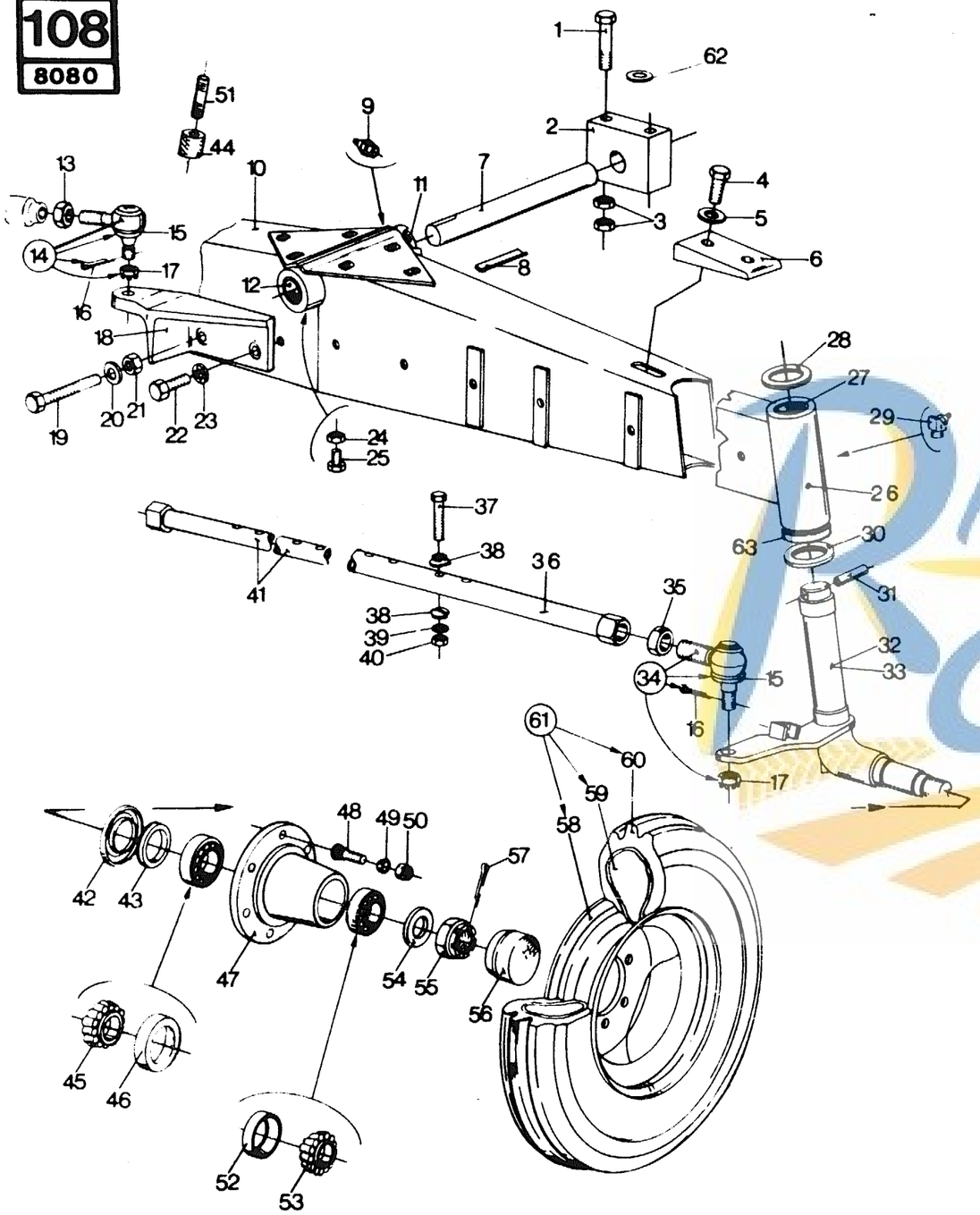

389 A

ADJUSTABLE STEERING AXLE
ESSIEU DE DIRECTION REGLABLE
REGULIERBARE FAHRGESTELL
ASSE POSTERIORE REGOLABILE
REGELBARE STUURBRUG

MODEL 8070 - 8080

Fig.	Order Ref.	CD	8070	8080	Code	Description	N.B.	
49	374503	3	12	12		Lockwasher		
50	374504	5	12	12		Wheel nut		
51	110020	1	2	2		Stud		
52	048976	9	2	2		Bearing cup	1.0	
53	048977	5	2	2		Bearing cone	0.8	
54	378248	7	2		848	Plain washer		
	304060	9	2		64	Plain washer		
	378248	7		2	609	Plain washer		
	304060	9		2	51	Plain washer		
55	309090	6	2	2		Hex. slotted nut		
56	321148	2	2		347	Cap		
	445397	6	2		44	Cap		
	321148	2		2	329	Cap		
	445397	6		2	39	Cap		
57	130011	8	2	2		Cotter pin		
58	—					Wheel disc	See group 109	
59	—					Inner tube	See group 109	
60	—					Tyre	See group 109	
61	NS					Wheel assembly		
62	394631	8	4	4		Washer		
63	357732	7	2		64	Bearing flange		
	357732	7		2	51	Bearing flange		

https://michelroger.be 236

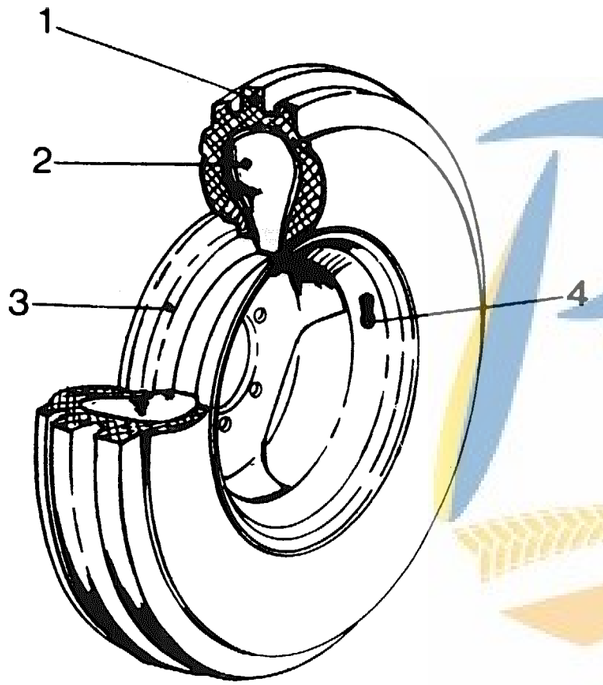

STEERING WHEELS
ROUES DE DIRECTION
LENKRÄDER
RUOTE DIREZIONALI
STUURWIELEN

MODEL 8070 - 8080

Fig.	Order Ref.	CD	8070	8080	Code	Description		N.B
						8,3 - 24 - S GAS	6 ply	
1	372380	9	2	2		Tyre		
2	372381	1	2	2		Inner tube		
3	446860	6	2	2		Wheel rim		
						16.0/70 - 20	8 ply	SPECIAL RIBBED
1	392521	3	2	2		Tyre		
2	398428	1	2	2		Inner tube		
3	386056	8	2	2		Wheel rim 14 x 20		
						9,5 - 24 - S GAS	6 ply	
1	410464	4	2	2		Tyre		
2	410463	2	2	2		Inner tube		
3	355966	0	2	2		Wheel rim		
						10.5/80 - 18 - F3	8 ply	Tubeless
1	439511	8	2	2		Tyre		
2	190111	0	2	2		Wheel rim 9 x 18		
3	394985	7		2		Inner tube		
	394985	7	2		866	Inner tube		
4	395448	0	2			Valve		
						13.0/65 - 18 - F3	8 ply	Tubeless
1	554516	8	2	2		Tyre		
3	394985	7	2	2		Wheel rim 9 x 18		
4	395448	0	2	2		Valve		
						8.3 - 24 - R1	6 ply	Tubeless
1	439518	2	2	2		Tyre		
3	446860	6	2	2		Wheel rim		
4	395448	0	2	2		Valve		
						12.4 - 28 - R1	6 ply	
1	425592	2	2	2		Tyre		
2	425589	5	2	2		Inner tube		
3	446861	8	2	2		Wheel rim		
						16.0/70 - 20 - I1	10 ply	
1	439513	2		2		Tyre		
	439513	2	2		866	Tyre		
2	398428	1		2		Inner tube		
	398428	1	2		866	Inner tube		
3	386056	8		2		Wheel rim 14 x 20		
	386056	8	2		866	Wheel rim 14 x 20		

Michel ROGER

https://michelroger.be 237

STEERING WHEELS
ROUES DE DIRECTION
LENKRÄDER
RUOTE DIREZIONALI
STUURWIELEN

MODEL 8070 - 8080

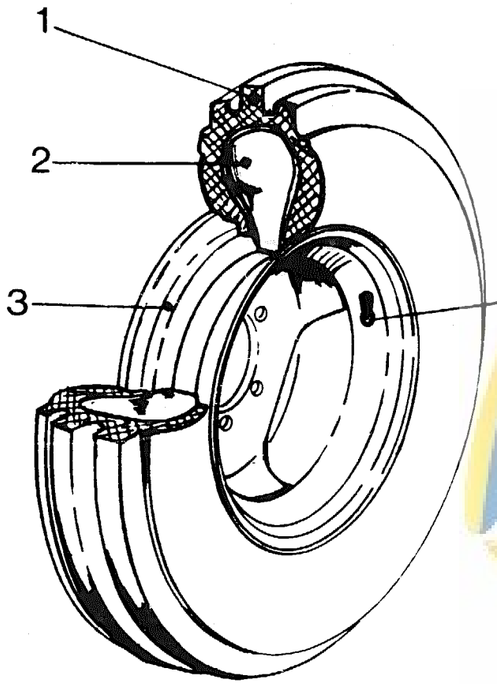

Fig.	Order Ref.	CD	8070	8080	Code	Description	N.B
						16.0/70 - 20 - 10PR - F - 3	
1	439513	2	2			Tyre	
3	386056	8	2			Wheel rim	
4	395448	0	2			Valve	

Michel ROGER

https://michelroger.be

Michel ROGER GROUP

110 ➧ 115

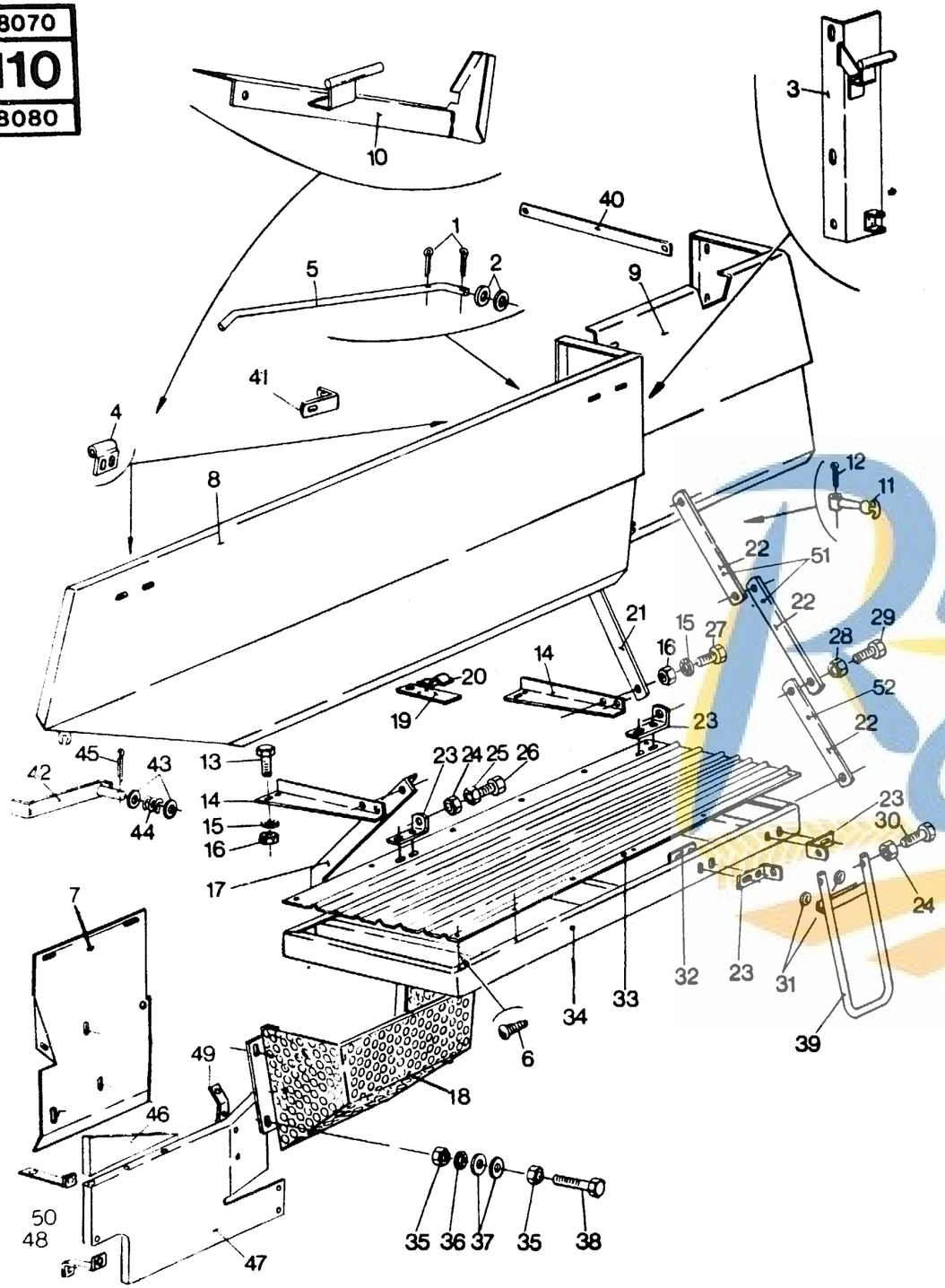

GUARDS (LEFT-HAND)
PROTECTIONS (GAUCHE)
SCHUTZBLECHE (LINKS)
PROTEZIONI (A SINISTRA)
AFSCHERMINGEN (LINKS)

Fig.	Order Ref.	CD	8070	8080	Code	Description	N.B.
1	130003	9	8	8		Cotter pin	
2	378244	7	7	7		Plain washer	
3	426028	8	1	1		Support	
4	350924	7	2	2		Hinge	
5	411080	1	1	1		Bracket	
6	353075	9	28	28		Machine screw	
7	426057	9	1	1		Guard	0,7
8	426026	4	1	1		Guard	0,5
9	411272	8	1	1		Guard	
10	426027	6	1	1		Plate	
11	353067	2	3	3		Rubber fastener	
12	300416	0	4	4		Cotter pin	
13	120105	3	2	2		Hex. cap screw	
14	411567	3	2	2		Bracket	
15	322358	2	12	12		Tooth lockwasher	
16	100015	8	18	18		Hex. nut	
17	398766	7	1	1		Support	
18	425345	9	1	1		Fan guard	0,7
19	411568	5	1	1		Plate	
20	353064	6	1	1		Snap fastener	
21	419964	3	1	1		Support	
22	411569	7	3		345	Stay	
	411569	7		3	326	Stay	
23	395634	5	4	4		Angle bracket	
24	100037	4	4	4		Hex. lock nut	
25	100016	0	2	2		Hex. nut	
26	120111	6	2	2		Hex. cap screw	
27	120104	1	9	9		Hex. cap screw	
28	100067	7	4	4		Hex. lock nut	
29	120161	1	6	6		Hex. cap screw	
30	120112	8	2	2		Hex. cap screw	
31	336456	6	2	2		Rubber grommet	
32	396559	6	2	2		Backing plate	
33	393086	0	1	1		Floor	1,3
34	393089	6	1	1		Service platform	1,4
35	100014	6	28	28		Hex. nut	
36	322357	0	15	15		Tooth lockwasher	
37	140015	6	32	32		Washer	
38	120100	3	15	15		Hex. cap screw	
39	393087	2	1	1		Step	0,4
40	390715	2	1	1		Brace	
41	393084	6	1	1		Angle bracket	

https://michelroger.be 240

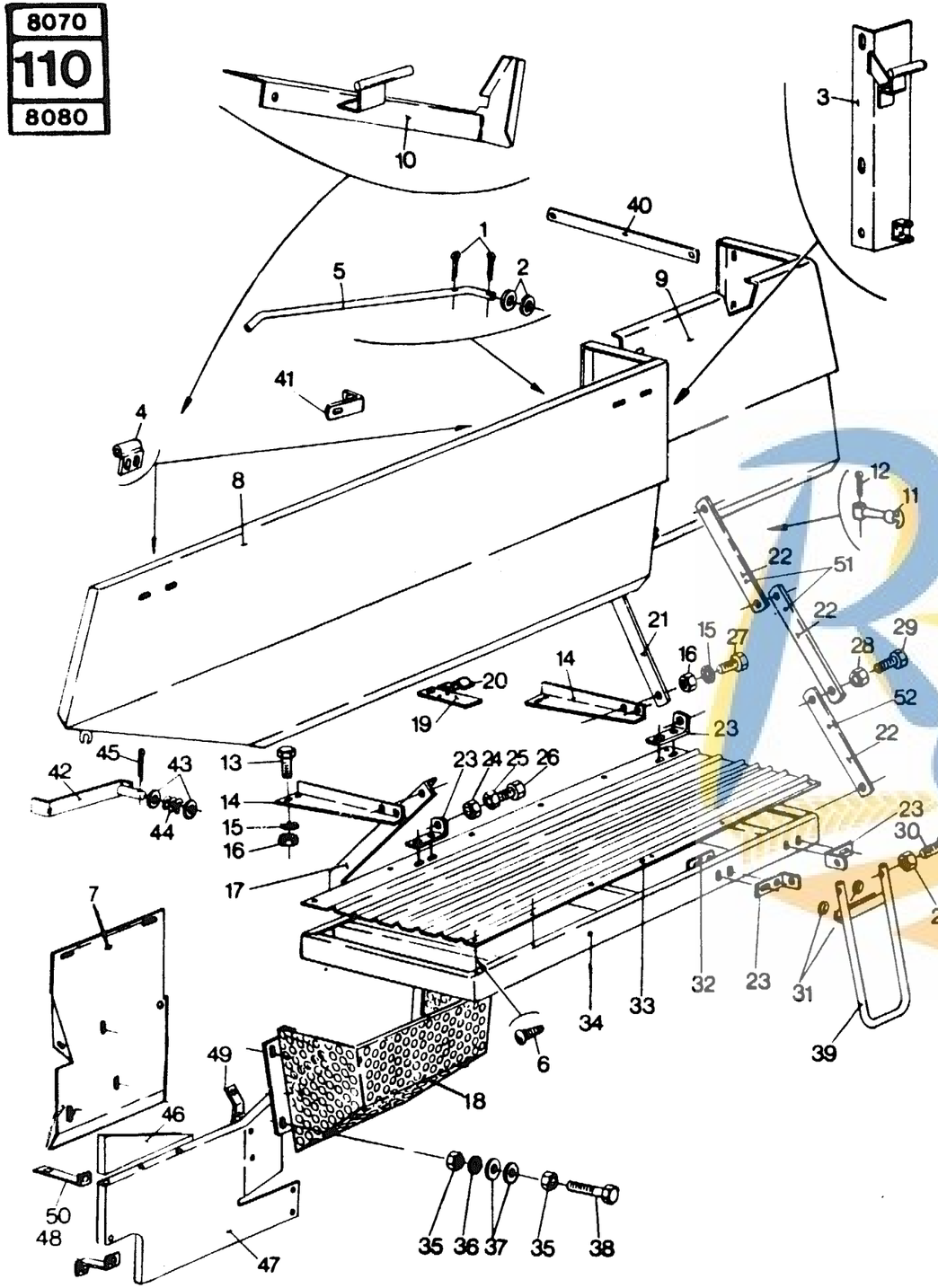

GUARDS (LEFT-HAND)
PROTECTIONS (GAUCHE)
SCHUTZBLECHE (LINKS)
PROTEZIONI (A SINISTRA)
AFSCHERMINGEN (LINKS)

MODEL 8070 - 8080

Fig.	Order Ref.	CD	8070	8080	Code	Description	N.B.
42	422572 7		1	1		Locking handle	
43	140020 7		2	2		Plain washer	
44	180068 5		1			Spring	
45	130008 9		1			Cotter pin	
46	442891 7			1		Guard	Mechanical drive
47	444450 5			1	611	Guard	Mechanical drive
	918768 1			1	56	Guard	Mechanical drive
	418641 8		1			Guard	Mechanical drive
48	442570 7			1	611	Support	Mechanical drive
	918766 7			1	56	Support	Mechanical drive
	419105 3		1			Support	Mechanical drive
49	444447 8			1		Support	Mechanical drive
	419108 9		1			Support	Mechanical drive
50	442806 8			1	611	Support	Mechanical drive
	918767 4			1	56	Support	Mechanical drive
	419107 7		1			Support	Mechanical drive
51	448175 5		2		42	Bracket	
	448175 5			2	36	Bracket	
52	448174 3		2		42	Bracket	
	448174 3			2	36	Bracket	

https://michelroger.be 241

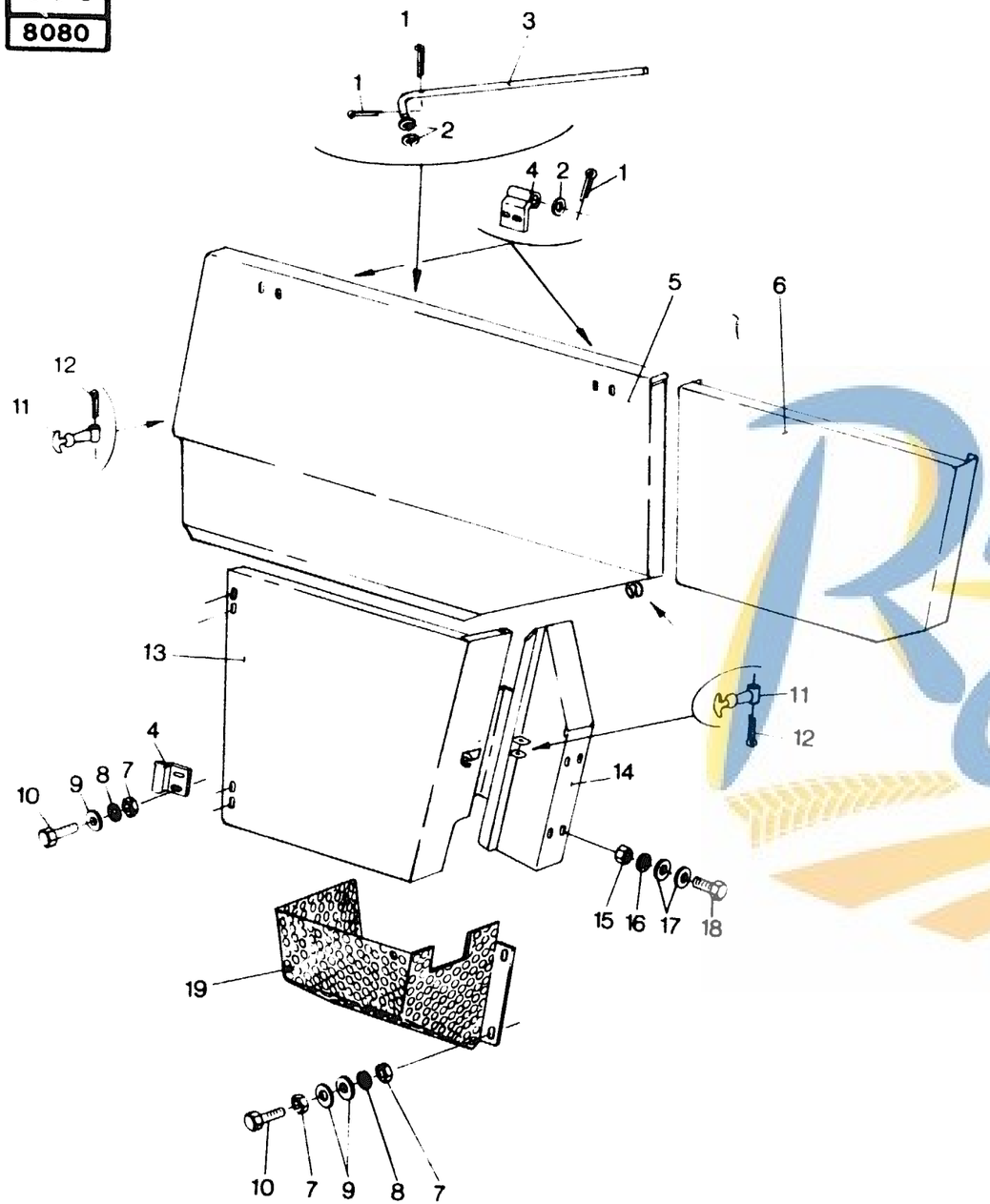

GUARDS (RIGHT-HAND)
PROTECTIONS (DROITE)
SCHUTZBLECHE (RECHTS)
PROTEZIONI (A DESTRA)
AFSCHERMINGEN (RECHTS)

MODEL 8070 - 8080

Fig.	Order Ref.	CD	8070	8080	Code	Description	N.B.
1	130003	9	4	4		Cotter pin	
2	378244	7	4	4		Washer	
3	390582	9	1	1		Stay rod	
4	350924	7	4	4		Hinge	
5	411084	9	1	1		Guard	0,5
6	426619	1	1	1		Guard	0,8
7	100014	6	8	8		Hex. nut	
8	322357	0	8	8		Tooth lockwasher	
9	140015	6	16	16		Plain washer	
10	120100	3	8	8		Hex. cap screw	
11	353067	2	3	3		Rubber fastener	
12	300416	0	3	3		Cotter pin	
13	432364	8	1	1		Guard	
14	426208	0		1		Guard support	
	392367	5	1			Guard support	
15	100015	8	8	8		Hex. nut	
16	322358	2	8	8		Tooth lockwasher	
17	378243	5	16	16		Plain washer	
18	120161	1	4	4		Hex. cap screw	
19	425346	1	1	1		Fan guard	

https://michelroger.be

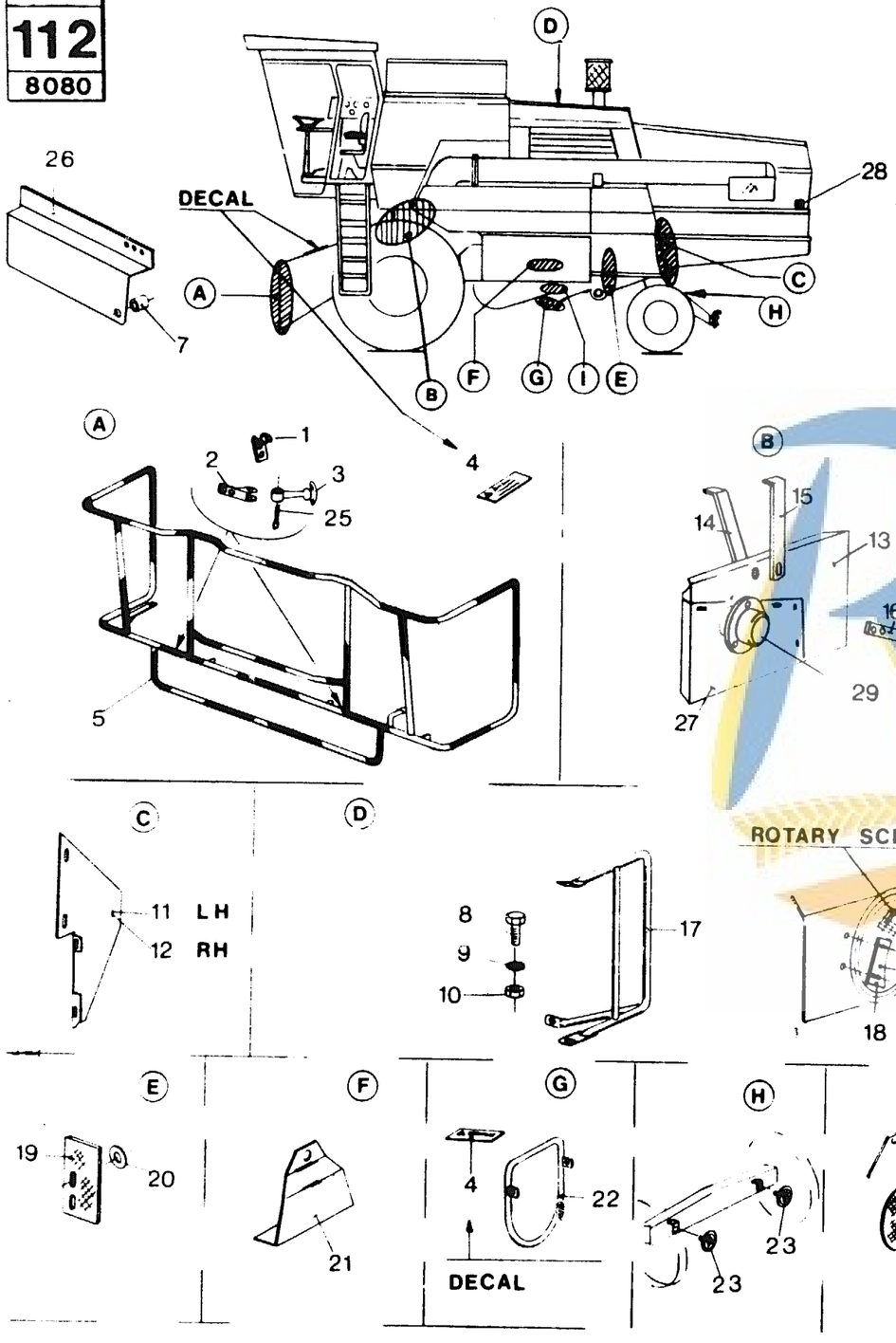

SUPPLEMENTARY EQUIPMENT FOR GERMANY
EQUIPEMENT SUPPLEMENTAIRE POUR L'ALLEMAGNE
ZUSÄTZLICHE AUSRÜSTUNG FÜR DEUTSCHLAND
EQUIPAGGIAMENTO SUPPLEMENTARE PER GERMANIA
BIJKOMENDE UITRUSTING VOOR DUITSLAND

MODEL 8070 - 8080

Fig.	Order Ref.	CD	8070	8080	Code	Description	N.B.
1	350232 0		2	2		Fastener clip	
2	350918 4		2	2		Fastener hinge	
3	353067 2		2	2		Rubber fastener	
4	450140 6		3	3		Decal	
5	419643 3		1	1		Safety railing	
6	397648 6		1	1		Plate	
7	200082 0		1	1		Bushing	
8	120100 3		AR	AR		Hex. cap screw	
9	322357 0		AR	AR		Tooth lockwasher	
10	100014 6		AR	AR		Hex. nut	
11	397649 8		1	1		Plate, L.H.	
12	397650 1		1	1		Plate, R.H.	
13	417291 4		1			Guard	
	411335 2			1		Guard	
14	399107 2		1	1		Bracket	
15	395188 8		1	1		Bracket	
16	417292 6		2	2		Bracket	
17	419256 2		1			Handrail	
	397876 9			1		Handrail	
18	397872 1		1	1		Plate	
19	397647 4		2	2		Rubber flap	
20	140040 9		2	2		Plain washer	
21	395186 4		1	1		Guard	
22	392523 7		1	1		Protection shield	
23	437024 3		2	2		Reflector	
24	395183 8		1	1		Rubber seal	
25	300416 0		2	2		Cotter pin	
26	377495 7		1	1		Plate	
27	396785 5			1		Guard	
28	425961 5			1		Decal	Germany
29	310071 0		1			Cover	

https://michelroger.be 243

COMMON GUARDS
PROTECTEURS SPECIAUX
GEMEINSAME ABSCHIRMUNGEN
PROTEZIONE SPECIALE
GEMEENSCHAPPELIJKE VEILIGHEIDSAFSCHERMINGEN

MODEL 8070 - 8080

Fig.	Order Ref.	CD	8070	8080	Code	Description	N.B.
1	450689	8	1	1		Guard	
2	396786	7	1	1		Guard	
3	381540	0	1	1		Handle	
4	396830	2	1	1		Plate	
5	350083	3	1	1		Hinge	
6	419680	1	1	1		Guard	
7	321803	6	4	4		Machine screw	
8	322355	6	4	4		Tooth lockwasher	
9	100012	2	4	4		Hex. nut	
10	395184	0	1	1		Guard	
11	419721	9	1	1		Guard	
12	326307	9	1	1		Spring	
13	362973	4	1	1		Guard	
14	395187	6	2	2		Cover, LH & RH	
15	353308	4	2	2		Hex. lock nut	
16	120031	6	2	2		Carriage bolt	
17	430870	9	1	1		Bracket	
18	426207	8	1	1		Plate	
19	418964	2	1	1		Bracket	
20	419259	8	1	1		Guard	
21	334568	1	1	1		Cap (for unloading auger)	
22	427445	3	1	1		Safety railing	
23	427446	5	1	1		Safety railing	
24	426206	6	1	1		Guard	
25	420643	6	2	2		Guard	

https://michelroger.be

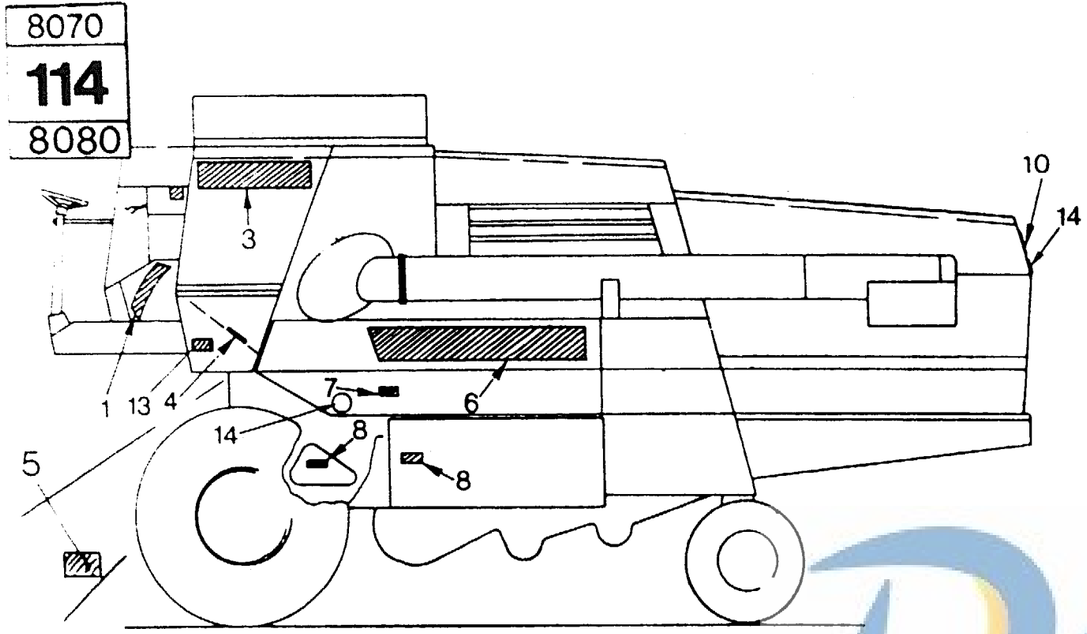

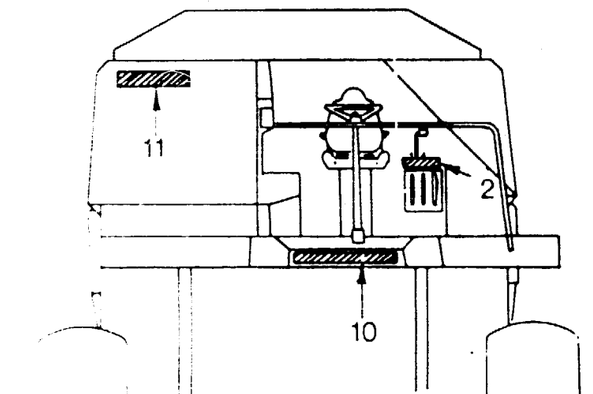

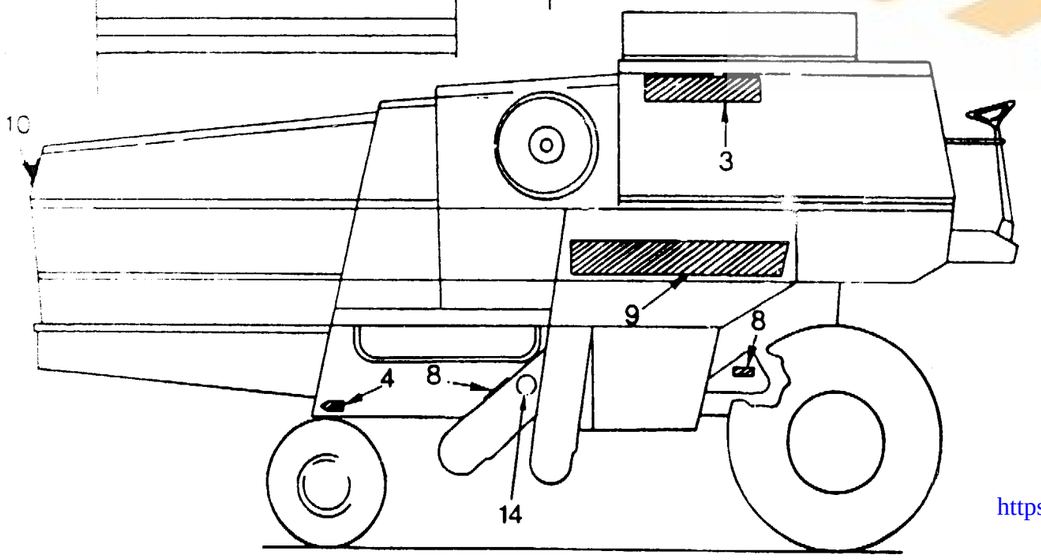

402

DECALS
TRANSFERS
KLEBEBILDER
DECALCOMANIE
PLAKPLAATJES

MODEL 8070 - 8080

Fig.	Order Ref.	CD	8070	8080	Code	Description	N.B
1	337136	9	1	1		Decal	
2	450788	8	1	1		Decal	
3	411360	5	2			Decal	"CLAYSON 8070"
	411332	6		2		Decal	"CLAYSON 8080"
4	449973	8	2	2		Decal	
5	438121	0	2	2		Decal	(C)
	9594157	2	2	2		Decal	(A)
6	411324	9	1	1		Decal	"NEW HOLLAND"
7	450141	8	1	1		Decal	(A)
	450596	1	1	1		Decal	(B)
	450584	6	1	1		Decal	(C)
8	450140	6	4	4		Decal	(A)
	450585	8	4	4		Decal	(B)
	743381	0	4	4		Decal	(C)
9	436146	0	1	1		Decal	"NEW HOLLAND"
10	337287	8	2	2		Decal	"NEW HOLLAND"
11	411359	2	1			Decal	8070
	411333	8		1		Decal	8080
12	743382	2	1	1		Decal	
13	438119	5	1	1		Decal	(B)
	743182	8	1	1		Decal	(C)
	438117	1	1	1		Decal	(A)
14	9513272	9	3		76	Decal	Only for Germany

Michel Roger

(A) English - Nederlands - Français - Deutsch - Italiano - Español
(B) English - Finnish - Swedish - Danish - Portuguese
(C) English - Arabic - Turkish - Greek

GROUP 114

https://michelroger.be

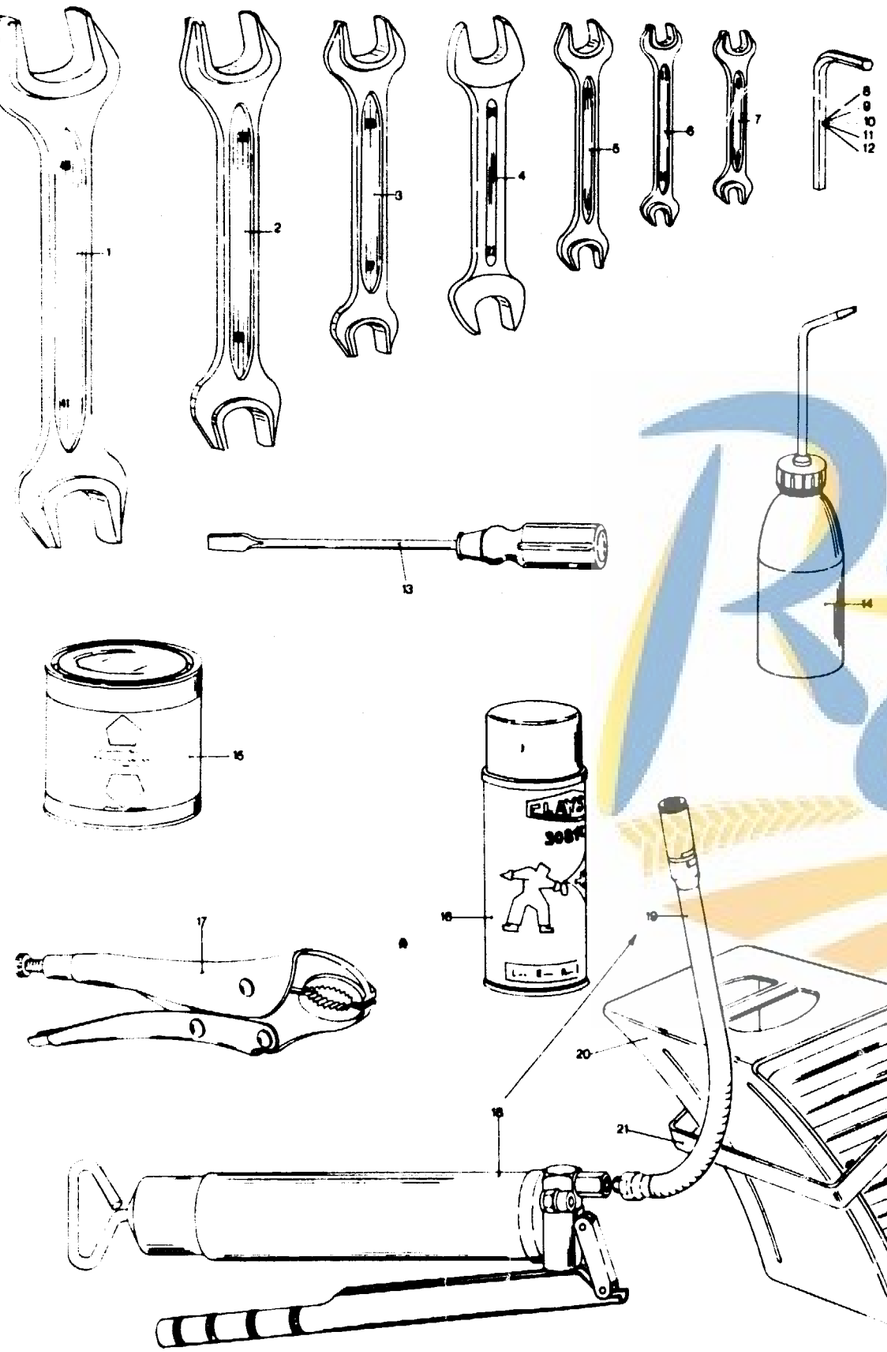

TOOLS
OUTILS
WERKZEUGE
UTENSILI
GEREEDSCHAP

MODEL 8070 - 8080

Fig.	Order Ref.	CD	8070	8080	Code	Description	N.B.
1	440010 9		1	1		Spanner	41/46 mm
2	440009 6		1	1		Spanner	32/36 mm
3	357064 0		1	1		Spanner	27/30 mm
4	357063 8		1	1		Spanner	22/24 mm
5	440006 0		1	1		Spanner	17/19 mm
6	332030 0		1	1		Spanner	10/13 mm
7	368484 3		1	1		Spanner	8/9 mm
8	440002 2		1	1		Allen key	6 mm
9	440001 0		1	1		Allen key	5 mm
10	308891 4		1	1		Allen key	4 mm
11	308890 2		1	1		Allen key	3 mm
12	357060 2		1	1		Allen key	2 mm
13	440011 1		1	1		Screw driver	
14	357079 1		1	1		Oil can	
15	306257 8		AR		847	Yellow paint	1 kg
	746950 0		AR		58	Yellow paint	1 kg New colour
	306257 8			AR	491	Yellow paint	1 kg
	746950 0			AR	47	Yellow paint	1 kg New colour
	306258 0		AR		847	Yellow paint	2 kg
	746951 2		AR		58	Yellow paint	2 kg New colour
	306258 0			AR	491	Yellow paint	2 kg
	746951 2			AR	47	Yellow paint	2 kg New colour
	306259 2		AR		847	Yellow paint	5 kg
	746952 4		AR		58	Yellow paint	5 kg New colour
	306259 2			AR	491	Yellow paint	5 kg
	746952 4			AR	47	Yellow paint	5 kg New colour
	306260 5		AR		847	Yellow paint	10 kg
	746953 6		AR		58	Yellow paint	10 kg New colour
	306260 5			AR	491	Yellow paint	10 kg
	746953 6			AR	47	Yellow paint	10 kg New colour
	306261 7		AR		847	Yellow paint	20 kg
	306261 7			AR	491	Yellow paint	20 kg
16	308109 7		AR		847	Spray can, Yellow paint	
	746949 7		AR		58	Spray can, Yellow paint	New colour
	308109 7			AR	491	Spray can, Yellow paint	
	746949 7			AR	47	Spray can, Yellow paint	New colour
17	440012 3		1	1		Vice grip	
18	440014 7		1			Grease gun assy	Incl. fig. 19
19	090064 8		1	1		Hose, Grease gun	
20	391246 8		1	1		Wheel chock	
21	385872 7		1	1		Bracket	

— THESE PARTS ARE NOT DELIVERED WITH THE COMBINE
— CES PIECES NE SONT PAS LIVREES AVEC LA MACHINE
— DIESE TEILE WERDEN NICHT MIT DER MASCHINE MITGELIEFERT
— QUESTI PEZZI NON SONO FORNITA CON LA MACCHINA
— DEZE STUKKEN WORDEN NIET MEDEGELEVERD MET DE MACHINE

https://michelroger.be

Ford

FORD
NEW HOLLAND

Michel ROGER

GROUP 198
INDEX

Part No. Numéro	Group Groupe	Fig. Rep.	Description
000015 7	93	8	Ressort
000016 9	100	23	Ressort
025194 4	78	16	Maillon
025805 1	78	15	Maillon
025816 4	72	83	Maillon
025953 4	101	2	Roulement
027286 1	44	13	Joint
030193 9	88	28	Poulie
034439 5	89	34	Roulement
036403 2	70	27	Collerette
038669 6	96	21	Ressort
040241 4	6	35	Attache
040242 6	5	30	Attache
042449 6	47	4	Roulement
042543 6	47	29	Roulement
043048 7	79	3	Collerette
043278 4	6	34	Maillon
048976 9	107	28	Cuvette de roulement
048977 1	107	41	Cône de roulement
049637 2	56	41	Rondelle
052392 7	39	7	Joint
056128 2	75	5	Flasque
062218 1	107	13	Goupille
063093 6	40	5	Bague d'étanchéité
064706 8	91	10	Clips
065248 7	40	4	Rondelle
065271 6	91	1	Couvercle
065272 8	92	3	Bol
065273 0	91	2	Bol
076896 3	90	34	Bouchon
080496 1	98	15	Goujon
080680 2	96	8	Rondelle
080709 4	39	56	Bouchon
081547 1	94	31	Vis
081837 6	39	55	Cheville
081858 0	40	3	Goupille
084942 2	41	51	Ecrou
087178 4	39	24	Boulon
087307 9	20	19	Ecrou
087308 1	45	41	Ecrou
087362 5	39	23	Rondelle
087363 7	41	8	Rondelle
087405 7	41	49	Boulon
087552 8	41	52	Rondelle grower
087870 2	41	7	Boulon
087872 6	42	42	Vis
087891 6	17	22	Ecrou
088011 3	94	40	Boulon
088260 0	94	38	Vis à tête hexagonale
088503 6	41	37	Boulon
088543 0	96	4	Vis
088638 1	39	22	Boulon
088645 6	41	4	Boulon
088664 6	40	22	Boulon
088703 0	96	13	Vis à tête hexagonale
088754 7	94	43	Boulon
090028 2	28	42	Rotule
090064 8	115	19	Pompe
100004 5	106	45	Ecrou
100005 7	105	62	Ecrou
100006 9	77	47	Ecrou
100012 2	113	9	Contre écrou
100013 4	35	6	Ecrou
100014 6	112	10	Ecrou
100015 8	111	15	Ecrou
100016 0	110	25	Ecrou
100017 2	34	29	Ecrou
100019 6	90	3	Ecrou
100020 7	108	3	Ecrou
100023 5	48	28	Bague d'arrêt
100024 7	59	6	Ecrou
100033 6	108	35	Ecrou
100034 8	50	40	Ecrou
100036 2	107	23	Ecrou
100037 4	110	24	Ecrou
100038 6	77	66	Ecrou
100039 8	77	34	Ecrou
100042 5	102	26	Ecrou
100043 7	27	48	Ecrou
100044 9	102	12	Ecrou
100064 1	98	14	Ecrou
100067 7	110	28	Ecrou
100095 6	15	34	Ecrou
100100 9	83	27	Ecrou
110019 8	46	8	Goujon
110020 1	108	51	Goujon
110022 5	50	14	Goujon
110040 3	19	22	Goujon
110057 8	44	12	Goujon
110107 5	46	3	Goujon
120007 5	53	43	Vis
120008 7	26	38	Vis
120013 8	68	17	Vis
120018 8	12A	34	Vis
120020 3	12A	35	Vis
120031 6	113	16	Boulon
120032 8	73	51	Boulon
120037 8	9	19	Vis
120041 7	70	42	Vis
120044 3	71	16	Vis

Part No. Numéro	Group Groupe	Fig. Rep.	Description
120046 7	64	35	Boulon
120047 9	78	69	Boulon
120052 0	20	45	Vis
120055 6	70	8	Vis
120056 8	27	55	Vis
120060 7	81	7	Vis
120061 9	90	7	Vis
120062 1	92	9	Vis
120063 3	66	32	Vis
120070 8	94	75	Vis
120072 2	59	21	Vis
120073 4	51	13	Vis
120075 8	94	72	Vis
120080 9	8	9	Boulon
120082 3	88	24	Vis
120083 5	78	22	Vis
120084 7	57	49	Vis
120086 1	90	21	Vis
120089 7	108	22	Vis
120090 0	97	45	Vis
120091 2	94	36	Vis
120092 4	50	50	Vis
120093 6	77	27	Vis
120094 8	53	61	Vis
120098 6	35	2	Vis
120099 8	90	47	Vis
120100 3	106	27	Vis
120101 5	106	46	Vis
120102 7	49	43	Vis
120103 9	99	1	Vis
120104 1	110	27	Vis
120105 3	110	13	Vis
120106 5	80	79	Vis
120107 7	70	34	Vis
120108 9	97	6	Vis
120109 1	93	6	Vis
120110 4	101	30	Vis
120111 6	110	26	Vis
120112 8	110	30	Boulon
120113 0	77	52	Vis
120114 2	77	58	Vis
120115 4	77	48	Boulon
120116 6	108	37	Vis
120117 8	105	30	Boulon
120118 0	24	36	Vis
120119 2	92	23	Vis à tête hexagonale
120120 5	108	25	Vis
120122 9	107	43	Vis
120124 3	105	39	Vis
120126 7	80	43	Vis
120151 0	46	12	Vis
120161 1	111	18	Boulon
120194 0	93	21	Vis
120201 7	97	74	Boulon
120202 9	102	10	Vis
120214 4	6	15	Boulon
120216 8	25	37	Vis
120229 5	27	25	Vis
120242 3	83	7	Vis
120245 9	100	24	Boulon
120256 2	80	54	Boulon
120258 6	97	46	Vis
122432 8	108	20	Rondelle
128784 9	78	20	Rondelle
129979 3	50	53	Joint
130002 7	93	17	Goupille
130003 7	23	1	Goupille
130004 1	59	4	Goupille
130005 3	45	29	Goupille
130006 5	103	14	Goupille
130007 7	56	20	Goupille
130008 1	108	16	Goupille
130010 4	56	16	Goupille
130011 6	107	35	Goupille
130012 8	6	27	Goupille
130014 2	77	59	Cheville
130016 6	97	13	Goupille
130022 9	63	9	Goupille fendue
130024 3	9	2	Cheville
130027 9	68	7	Rivet
130043 3	100	19	Goupille
130044 5	62	9	Goupille
130045 7	49	19	Goupille
130046 9	21	34	Goupille
130047 1	74	51	Cheville
130051 0	78	38	Cheville
130053 4	78	49	Goupille élastique
130054 6	78	39	Cheville
130059 6	53	21	Goupille
130065 9	97	52	Rivet
130070 0	71	39	Rivet
130078 6	57	6	Goupille élastique
140013 2	101	28	Rondelle
140014 4	35	4	Rondelle
140015 6	111	9	Rondelle
140016 8	12A	36	Rondelle
140017 0	24	40	Rondelle
140018 2	20	29	Rondelle
140020 7	110	43	Rondelle
140021 9	78	21	Rondelle

https://michelroger.be 248

Part No. Numéro	Group Groupe	Fig. Rep.	Description
140026 9	95	30	Rondelle
140040 9	112	20	Rondelle
140041 1	15	24	Rondelle
140042 3	77	14	Rondelle
*140044 7	27A	36	Rondelle
140045 9	108	39	Rondelle
140046 1	97	44	Rondelle
140047 3	98	13	Rondelle
140048 5	108	23	Rondelle
140075 2	54	28	Rondelle
140077 6	17	14	Rondelle
140081 5	48	35	Rondelle
140082 7	54	28	Rondelle
140085 3	8	31	Rondelle
140086 5	54	26	Rondelle
140087 7	7	61	Rondelle
140091 6	108	5	Rondelle
140094 2	78	68	Rondelle
140096 6	78	67	Rondelle
140103 3	77	69	Rondelle
140108 3	78	10	Rondelle
140109 5	78	9	Rondelle
140110 8	29	32	Rondelle
140115 8	50	39	Rondelle
140116 0	97	15	Rondelle
140125 9	5	16	Rondelle
140128 5	107	42	Rondelle
140160 3	67	29	Rondelle
140175 4	53	17	Rondelle
140181 7	66	44	Rondelle
140193 2	25	47	Rondelle
140219 8	72	37	Rondelle
140223 7	67	26	Rondelle
140229 9	77	68	Rondelle
140246 5	98	19	Rondelle
144129 1	42	34	Filtre
147215 7	48	20	Roulement
147216 9	48	21	Roulement
150006 9	47	12	Tampon
150013 4	102	13	Olive
150014 6	102	27	Olive
150015 8	27	47	Olive
150017 2	28	3	Raccord
150018 4	28	49	Raccord
150019 6	29	7	Raccord
150021 1	72	63	Raccord
150024 7	78	42	Graisseur
150060 3	97	62	Bouchon
150064 1	102	23	Etrier
150090 6	27A	25	Raccord
160036 4	95	58	Tuyau
160091 0	38	52	Tuyau de graissage
160111 4	97	38	Tuyau
160164 5	29	10	Conduite
160170 8	95	54	Tube
163086 2	39	60	Ressort
163089 8	41	46	Joint
163091 3	40	2	Cheville
163093 7	41	45	Joint
163094 9	41	9	Valve
163106 6	39	28	Reteneur
163107 8	39	27	Joint
163603 0	42	11	Clapet
165174 1	39	52	Bouchon
165175 3	39	53	Joint
165179 1	39	51	Cheville
165181 6	39	34	Axe
165186 6	39	42	Axe
165187 8	41	25	Reteneur
165197 9	41	64	Cheville
165199 3	41	63	Maillon
165202 2	41	56	Joint
165207 2	41	50	Poignée
165212 3	41	10	Joint
165214 7	41	5	Joint
165215 9	41	33	Reteneur
165216 1	41	35	Joint
165217 3	41	36	Joint
165218 5	41	39	Guide ressort
165219 7	41	40	Ressort
165221 2	41	42	Axe
165222 4	41	43	Circlips
165228 6	41	77	Axe
165238 7	42	38	Rondelle
165239 9	42	39	Ressort
165240 2	42	40	Joint
165241 4	42	35	Joint
166208 5	40	12	Cale
166209 7	40	8	Cale
166212 4	40	17	Cale
166213 6	40	18	Cheville
166214 8	40	16	Pompe
166215 0	40	20	Couvercle
166216 2	40	15	Arbre
166218 6	40	13	Cheville
166236 4	39	8	Circlips
166239 0	39	3	Ressort
166240 3	39	14	Bouchon
166276 3	41	38	Rondelle
166277 0	41	32	Vis

Part No. Numéro	Group Groupe	Fig. Rep.	Description
166278 2	41	55	Vis
166282 1	39	1	Bouchon
166284 5	40	19	Clavette
166285 7	39	6	Joint
166286 9	39	4	Rondelle
166479 8	41	53	Bague d'écartement
167266 8	99	9	Joint
167268 2	42	27	Joint
167269 4	43	13	Joint
170006 3	72	57	Clavette
170008 7	88	8	Clavette
170010 2	78	57	Clavette
170011 4	72	16	Clavette
170012 6	5	19	Clavette
170019 0	50	38	Clavette
170030 4	94	63	Clavette
170035 4	69	2	Clavette
170047 9	57	30	Clavette
170052 0	59	5	Clavette
170058 2	61	19	Clavette
180012 8	46	16	Ressort
180020 5	59	32	Ressort
180021 7	88	39	Ressort
180032 0	106	49	Ressort
180033 2	37	23	Ressort
180035 6	19	12	Ressort
180037 0	83	43	Ressort
180063 5	96	38	Ressort
180068 5	110	44	Ressort
180069 7	105	34	Ressort
180072 4	25	38	Ressort
180087 5	34	36	Ressort
180113 2	67	25	Ressort
181211 1	42	36	Joint
181212 3	42	37	Filtre
188531 6	40	23	Pompe de gavage
188533 0	41	47	Valve
188534 2	41	81	Cheville
188535 4	41	31	Bouchon
188537 8	41	41	Piston
188541 7	39	29	Bouchon
188542 9	39	31	Plaquette de réglage
188543 1	39	30	Gasket
188544 3	41	14	Roulement
188545 5	39	33	Soupape disque
188546 7	41	17	Disque roulement
188547 9	41	18	Disque roulement
188548 1	41	19	Bague
188549 3	41	20	Bague
188550 6	39	39	Guide
188551 8	41	22	Ressort
188552 0	39	41	Bague
188553 2	39	44	Bloc cylindre
188554 4	39	43	Bague
188555 6	39	45	Guide
188557 0	41	28	Disque
188558 2	41	29	Piston
188559 4	39	49	Plateau came
188560 7	41	70	Roulement
188561 9	39	54	Carter pompe
188564 5	41	78	Bague d'étanchéité
188565 7	41	79	Bague d'arrêt
188570 8	40	14	Corps
188571 0	40	11	Soupape
188572 2	40	10	Ressort
188573 4	39	13	Block de distribution
188574 6	39	12	Piston
188576 0	39	11	Ressort
188577 2	39	19	Piston
188578 4	39	18	Bague d'étanchéité
188579 6	39	20	Joint
188580 9	39	15	Piston
188581 1	39	16	Joint
188582 3	39	17	Joint
188583 5	39	9	Bouchon
190007 9	52	4	Chambre à air
190029 5	106	32	Bloc
190067 5	24	27	Support
190102 1	102	7	Bague
190111 0	109	2	Chambre à air
190126 1	108	15	Joint
198445 5	26	51	Fusible
199954 5	108	45	Roulement
199955 7	107	26	Roulement
200020 0	60	11	Bague
200071 7	78	66	Manchon
200072 9	77	29	Poulie
200073 1	59	46	Poulie
200082 0	112	7	Bague
200086 8	45	24	Buselure
200091 9	45	24	Bague
200097 1	78	55	Buselure
200098 3	57	25	Bague
200142 8	79	5	Bague
200149 2	6	24	Bague
200167 0	58	31	Buselure
200203 8	96	6	Rondelle spéciale
200219 1	47	43	Entretoise
*200331 9	90	53	Bague
210001 2	45	47	Bille

http://michelroger.be

Part No. Numéro	Group Groupe	Fig. Rep.	Description
210006 2	46	17	Bille
210013 7	45	21	Butée
210014 9	45	17	Rondelle
210024 0	88	26	Bague
210026 4	44	4	Bague
210032 7	74	6	Roulement
210033 9	74	46	Roulement
210034 1	5	8	Roulement
210039 1	66	7	Roulement
210043 0	78	7	Roulement
210045 4	50	29	Roulement
210046 6	45	12	Roulement
210048 0	47	15	Roulement
210049 2	60	10	Roulement
210054 3	69	7	Roulement
210075 7	75	12	Roulement
211557 0	102	29	Cheville
212606 6	78	37	Roulement
212607 8	70	29	Roulement
212608 0	70	30	Bague
220010 3	78	5	Bague
220011 5	74	18	Bague
220022 8	98	50	Joint
220025 4	46	9	Roulement
220039 3	53	55	Etanche
220049 4	95	21	Bague
220050 7	81	55	Rondelle
220061 0	72	11	Bague
220062 2	72	77	Feutre
220063 4	64	12	Feutre
220105 4	95	23	Etanchéité
220120 6	94	46	Joint
220122 0	94	45	Joint
230028 2	72	33	Maillon
230029 4	74	35	Maillon
230125 8	105	51	Chaîne
230151 3	27A	4	Courroie
260023 8	71	41	Axe
260029 0	53	60	Arbre
260037 7	94	58	Cheville
260190 1	73	47	Axe
266963 6	26	14	Bouton
270064 6	78	62	Pignon
290112 3	88	30	Poulie
290114 7	88	32	Poulie
290119 7	73	26	Poulie
290122 4	73	28	Poulie
300004 7	74	44	Bague
300013 6	72	18	Bague
300014 8	64	14	Bague
300024 9	21	23	Bague
300313 2	13	23	Roulement
300351 2	17	8	Rondelle
300366 3	56	44	Rondelle à ressort
300380 3	36	37	Vis
300381 5	78	34	Vis
300382 7	95	67	Vis
300383 9	98	17	Vis
300388 9	78	52	Boulon à tête hexagonale
300389 1	108	25	Vis
300416 0	110	12	Clavette
300436 2	12	58	Vis
300444 9	89	40	Vis
300475 4	38	43	Vis
300480 5	72	65	Vis
300483 1	69	27	Vis
300488 1	8	63	Goujon
300506 1	88	17	Vis
300507 3	17	35	Vis
300508 5	27A	52	Vis à tête hexagonale
300510 0	94	6	Vis
300512 4	80	12	Boulon
300595 8	28	44	Goupille
300625 3	101	18	Circlips
300633 0	66	15	Circlips
300637 8	61	29	Circlips
300639 2	48	18	Circlips
300642 9	54	43	Circlips
300645 5	13	22	Circlips
300660 7	67	31	Vis
300809 3	21	21	Vis
300872 6	50	48	Cheville
300904 5	61	28	Joint
300934 8	26	64	Bouton appel
301202 8	108	30	Roulement
301615 9	54	41	Etuve
301624 2	59	10	Circlips
301652 1	60	21	Circlips
301663 4	97	82	Buselure
304060 9	108	54	Rondelle
304967 1	27	13	Joint
305166 4	24	18	Feu
306248 9	94	21	Clavette
306257 8	115	15	Outillage
306258 0	115	15	Peinture jaune
306259 2	115	15	Peinture jaune
306260 5	115	15	Peinture jaune
306261 7	115	15	Peinture jaune
306740 3	64	21	Douille
308109 7	115	16	Peinture

Part No. Numéro	Group Groupe	Fig. Rep.	Description
308278 4	74	36	Maillon
308450 0	64	49	Feutre
308532 4	95	24	Bride de tension
308668 1	95	65	Connexion
308684 5	95	58	Tuyau
308686 9	95	66	Tuyau
308761 9	104	24	Vis
308803 9	54	42	Roulement
308823 1	29	33	Ecrou
308853 4	57	48	Axe
308890 2	115	11	Outil
308891 4	115	10	Outil
309026 2	73	24	Bague
309090 6	108	55	Ecrou
309135 3	5	18	Ecrou
309227 8	19	23	Levier
309586 8	36	27	Levier
310045 5	74	25	Coussinet
310046 7	72	91	Palier
310048 1	72	3	Palier
310049 3	64	11	Palier
310051 8	64	7	Palier
310056 8	74	56	Feutre
310067 1	73	64	Protection
310071 0	112	29	Couvercle
310072 2	72	76	Palier
310085 9	72	78	Couvercle
310114 2	64	48	Tôle
310131 8	64	50	Couvercle
310146 9	78	61	Roulement
316128 7	81	52	Moteur Mercedes OM 401
316623 7	102	1	Réservoir
316666 7	96	31	Moteur Ford
317784 8	85	40	Moteur Fiat 8361 SI
317785 0	98	40	Moteur Fiat 8361 I
317939 7	81	52	Moteur Mercedes OM 421
317958 7	90	50	Moteur Mercedes OM 352A
318760 9	102	1	Réservoir
318761 1	102	1	Réservoir
320033 2	67	1	Palier
320177 6	89	41	Rondelle grower
320557 2	66	14	Roulement
320648 5	60	32	Ecrou
320677 6	21	32	Pivot
320771 6	28	43	Ecrou
320772 8	5	3	Vis
320855 4	63	21	Couvercle
320866 7	64	31	Poulie
320872 0	63	11	Baguette
320984 7	102	15	Tuyau
321069 8	69	8	Palier
321148 2	108	56	Enjoliveur
321150 1	108	14	Rotule
321204 1	108	9	Graisseur
321215 9	56	3	Ressort
321245 2	59	7	Rondelle
321311 3	72	48	Ressort
321507 8	69	25	Plaque
321526 8	53	26	Fourchette
321559 3	53	51	Courroie
321603 2	29	36	Rondelle
321662 6	94	57	Plaque
321665 2	46	5	Goujon
321744 0	71	36	Trappe
321803 6	113	7	Vis
321886 0	61	2	Arbre
321951 9	45	43	Roulement
322266 7	105	49	Support
322295 8	102	22	Tôle
322355 6	113	8	Rondelle
322356 8	35	5	Rondelle
322357 0	112	9	Rondelle
322358 2	111	16	Rondelle
322359 4	13	4	Rondelle
322365 7	47	20	Roulement
322423 1	46	2	Pivot
322506 7	30	12	Boule
322507 9	30	11	Boule
322508 1	49	6	Boule
322512 0	95	20	Guide
322589 1	33	5	Ecrou
322805 1	95	50	Ecartement
322901 5	62	21	Axe
323009 4	13	1	Chapeau
323116 1	26	25	Contacteur
323206 2	29	20	Protection
323222 6	10	8	Chaîne
323238 9	45	23	Ecrou
323239 1	105	50	Crochet
323307 6	71	34	Ressort
323473 7	99	17	Raccord
323505 6	8	17	Bague
323597 9	94	59	Collier
323598 1	105	28	Tôle
323713 7	108	29	Graisseur
323771 9	29	19	Etrier
323787 2	107	14	Graisseur
323903 0	78	64	Tige
323913 1	54	37	Fil
324093 2	96	30	Support

https://michelroger.be 250

Part No. Numéro	Group Groupe	Fig. Rep.	Description
324622 5	59	15	Bague
324715 2	68	10	Ailette
325103 6	75	6	Roulement
325106 2	77	2	Roulement
325110 1	94	67	Roulement
325338 3	99	7	Olive
325339 5	99	8	Olive
325354 7	28	35	Flasque
325594 5	59	23	Rondelle
325842 2	59	19	Bague
325911 9	71	54	Rivet
326078 2	97	47	Bague
326079 4	97	61	Raccord
326080 7	97	51	Fixation
326081 9	80	60	Tuyau
326082 1	97	49	Collier
326083 3	80	48	Tuyau
326307 9	113	12	Ressort
326432 4	14	10	Rondelle
326436 2	14	13	Tôle d'écartement
326440 1	14	15	Joint
326441 3	14	16	Couvercle
326442 5	14	17	Rondelle
326443 7	14	18	Vis à tête hexagonale
326444 7	14	19	Goupille élastique
326445 1	14	20	Vis à tête hexagonale
326446 3	14	5	Vis de blocage
326447 5	14	4	Bille
326870 2	42	25	Tôle de liaison
327084 6	69	38	Rondelle
327187 4	33A	9	Joint
327232 1	14	3	Anneau
327323 4	14	14	Arrêt
327454 1	28	52	Buselure
327727 0	90	42	Fixation
327802 0	61	18	Rondelle
328024 1	106	1	Boîte d'outillage
328430 2	60	38	Boulon
328754 8	8	36	Vis à collet carré
328873 0	73	49	Vis
330005 5	95	51	Etrier
330022 1	69	30	Poignée
330263 1	50	41	Pièce arrêt
330291 0	48	13	Goujon
330308 7	28	15	Vis
330309 9	28	17	Joint
330472 4	89	77	Etrier
330590 4	61	8	Levier
330677 8	26	23	Protection
330737 6	73	26	Poulie
330997 6	95	52	Olive
330999 0	95	53	Ecrou
331162 8	19	10	Rondelle
331209 1	108	13	Ecrou
331619 7	76	16	Vis
331649 0	45	18	Plaque
331712 5	70	20	Plaque
331713 7	70	35	Support
332030 0	115	6	Outillage
332038 6	72	88	Graisseur
332039 8	74	4	Graisseur
332040 1	64	15	Axe
332198 4	100	17	Tige
332401 7	24	26	Clip
332402 9	24	26	Fixation
332404 3	25	7	Fixation
332660 5	34	13	Rondelle
332672 0	29	14	Ressort
332673 2	29	16	Bague
332685 7	7	22	Bague
332749 3	56	1	Levier
332809 1	62	16	Toile
332865 9	106	19	Support
332866 1	106	13	Support
332871 2	106	14	Tige
332874 8	106	12	Support
332881 3	53	28	Axe
333040 2	105	55	Rondelle
333041 4	105	54	Rondelle
333222 8	54	4	Cornière
333235 5	88	27	Bague
333292 5	63	20	Grille
333297 5	103	7	Cale
333349 6	79	18	Support
333380 2	70	13	Couvercle
333383 8	70	24	Indicateur
333423 4	71	44	Couvercle
333506 0	75	37	Ressort
333541 4	65	11	Rondelle d'épaisseur
333656 7	58	24	Cornière
333657 9	58	23	Cornière
333744 2	6	44	Protection
333960 2	74	51	Goupille
333994 3	36	30	Arbre
334054 2	69	35	Ressort
334056 6	69	13	Entretoise
334200 3	61	25	Roulement
334237 0	68	18	Ressort
334247 1	16	18	Levier
334249 5	15	17	Chape

Part No. Numéro	Group Groupe	Fig. Rep.	Description
334483 1	6	19	Bague
334502 3	63	7	Etanchéité
334568 1	113	21	Couvercle
334605 1	26	46	Câble de batterie
334606 3	26	47	Câble de batterie
334682 3	71	4	Boulon
334695 0	24	28	Protecteur
334696 2	25	44	Passe fil
334707 7	57	8	Palier
334713 0	100	18	Levier
334732 0	24	29	Protecteur
334906 9	26	2	Compteur
334970 4	78	70	Tendeur
335005 0	36	43	Flexible
335021 4	43	22	Etrier
335036 5	24	26	Etrier
335040 4	36	20	Vis
335135 5	102	38	Ecrou
335136 7	102	39	Olive
335137 9	48	11	Cône
335168 4	27	32	Olive
335169 6	30	36	Olive
335170 9	30	42	Ecrou
335171 1	27	28	Ecrou
335172 3	49	37	Raccord
335173 5	32	12	Raccord
335174 7	32	15	Raccord
335305 6	67	18	Rivet
335307 0	54	9	Cornière
335378 9	25	41	Bouton
335872 7	26	55	Rondelle
335875 3	56	2	Poignée
335934 9	68	1	Dent
335935 1	68	8	Levier
336096 2	26	21	Commutateur
336125 5	13	2	Volant
336126 7	13	6	Clavette
336152 2	24	27	Guide
336256 2	12A	37	Ecrou hexagonal
336270 2	38	34	Goujon
336424 9	27A	10	Clavette Woodruff
336455 4	105	7	Tampon
336456 6	110	31	Tampon
336477 0	105	48	Clavette
336511 4	72	34	Plaquette
336524 1	99	12	Joint
336722 1	30	3	Raccord
336723 3	17	11	Réservoir
336724 5	17	28	Raccord
336728 3	17	30	Cylindre de frein
336745 9	18	16	Vis
336746 1	45	33	Levier
336748 5	30	22	Collier
336760 1	18	6	Fixation
336793 0	13	36	Cheville
336851 4	26	36	Fusible
336897 0	48	36	Bouchon
336937 6	96	39	Support
336945 3	48	10	Ecrou
337049 4	82	12	Etrier
337136 9	114	1	Décalque
337208 2	27A	12	Raccord
337209 4	27	1	Raccord
337322 4	95	55	Tuyau
337411 3	73	55	Rondelle
337475 7	107	6	Ecrou
337563 4	38	29	Vis
337829 8	77	38	Ressort
338009 1	28	28	Flexible
338010 4	27	45	Valve
338073 6	15	21	Levier
338074 8	15	22	Tige
338206 9	72	39	Rondelle
338413 8	69	31	Vis
338514 2	9	43	Cale
338712 2	73	53	Palier
338943 1	25	21	Bague
338949 3	77	3	Vis
340039 8	70	23	Vis
340075 4	62	20	Fourche
342172 2	64	25	Grower
350083 3	113	5	Charnière
350095 8	76	2	Charnière
350114 0	78	41	Croisillon
350186 1	100	12	Articulation
350187 3	98	35	Robinet
350232 0	112	1	Fixation
350341 1	38	41	Goujon
350342 3	38	41	Tige
350413 4	74	40	Chaîne
350613 8	7	11	Bouchon
350616 4	59	44	Boulon
350679 6	107	20	Rotule
350737 0	71	45	Tôle
350876 4	26	9	Manomètre
350918 4	112	2	Charnière
350924 7	111	4	Charnière
353064 6	110	20	Ressort
353067 2	111	11	Etrier
353072 3	81	60	Etrier

http://michelroger.be 251

Part No. Numéro	Group Groupe	Fig. Rep.	Description
353075 9	110	6	Vis
353077 3	26	29	Feu de contrôle
353078 5	26	30	Lampe
353093 7	43	8	Flexible
353094 9	43	9	Flexible
353095 1	42	41	Raccord
353096 3	99	6	Coude
353097 5	43	12	Raccord
353099 9	43	14	Raccord
353100 4	42	33	Raccord
353104 2	42	8	Raccord
353105 4	42	55	Olive
353106 6	43	6	Olive
353108 0	43	20	Joint
353145 8	57	27	Raccord
353147 2	15	12	Fixation
353213 3	37	37	Etrier
353308 4	113	15	Ecrou
353367 8	96	35	Support
353369 2	83	39	Support
353718 3	45	35	Couvercle
353720 8	45	4	Goujon
353893 3	63	6	Etrier
354013 0	93	40	Levier
354021 7	93	35	Axe
354039 4	83	33	Ressort
354085 1	37	40	Ressort
354086 3	37	41	Buselure
354087 5	37	42	Support
354088 7	37	39	Support
354133 4	57	73	Rondelle
354140 9	37	28	Cheville
354141 1	37	29	Cheville
354142 3	37	33	Palier
354143 5	37	30	Ecrou
354144 7	37	31	Ecrou
354145 9	37	32	Roulement
354146 1	37	34	Câble
354257 6	26	37	Fusible
354301 1	9	9	Levier
354302 3	9	10	Levier
354307 3	9	8	Tringle
354309 7	9	33	Ecrou
354337 6	28	13	Pastille
354372 0	25	34	Relais
354374 4	24	17	Avertisseur
354679 0	29	15	Support
354720 9	20	4	Ecrou
354730 0	69	26	Plaque
354810 0	80	8	Joint
354821 3	97	2	Etrier
354834 0	81	26	Mano
354957 0	10	9	Crochet
354969 5	97	81	Vis
354977 2	80	46	Joint
355066 2	95	59	Raccord
355071 3	97	77	Etrier
355102 0	94	11	Palier
355212 3	26	3	Joint
355259 1	80	45	Boulon
355528 2	53	39	Manomètre
355596 5	24	27	Passe fil
355604 4	34	24	Ressort
355687 8	33	3	Circlips
355690 5	33	1	Vis à tête hexagonale
355966 0	109	3	Jante
356025 7	53	52	Courroie
356169 1	42	10	Ecrou
356170 4	42	9	Olive
356331 6	24	26	Câble électrique
356341 7	27	65	Ressort
356353 2	20	17	Cylindre
356427 9	27	6	Joint
356463 5	27A	16	Vis
356464 7	27A	35	Vis
*356526 9	72	47	Rondelle
356723 7	15	39	Disque
356781 9	26	49	Batterie
356823 9	106	42	Support
356830 4	106	50	Tôle
357016 9	108	27	Bague
357060 2	115	12	Outil
357063 8	115	4	Outil
357064 0	115	3	Outillage
357077 7	27	2	Ecrou
357078 9	27	3	Olive
357079 1	115	14	Outillage
357238 9	108	48	Vis
357240 4	108	43	Joint
357294 7	45	42	Vis à tête hexagonale
357295 9	45	49	Ressort
357298 5	45	39	Attache
357299 7	45	40	Fourchette
357300 2	45	36	Fourchette
357467 4	99	10	Joint
357468 6	107	27	Moyeu
357500 6	107	3	Bague
357554 9	26	35	Boite
357692 1	102	8	Jauge
357732 1	107	45	Palier

Part No. Numéro	Group Groupe	Fig. Rep.	Description
357733 9	107	24	Couvercle
357924 4	50	16	Axe
358754 4	26	39	Etrier
358817 8	70	10	Rondelle
359494 3	20	●	Pochette
359495 5	17	40	Arbre
359497 9	20	18	Fourche
359498 1	17	12	Couvercle
359499 3	17	16	Raccord
359500 8	17	15	Joint
359674 5	57	60	Bague
359726 6	60	46	Boulon
359951 3	91	18	Clips
359952 5	91	17	Durité
360046 7	50	9	Joint
360047 9	50	8	Couvercle
360296 6	97	72	Vis
360379 2	9	29	Ressort
360747 3	98	20	Collier
360837 4	37	2	Disque
362183 9	57	61	Ressort
352237 4	53	45	Support
362250 2	96	40	Levier
362277 8	6	23	Logement
362298 2	60	13	Rondelle
362308 5	49	20	Levier
362403 7	7	26	Ressort
362452 0	32	9	Accouplement
362502 7	96	27	Tige
362626 9	53	22	Vis
362776 6	70	49	Rondelle
362784 3	76	50	Rivet
362785 5	105	21	Bague
362786 7	105	22	Plaquette
362801 1	6	22	Moyeu
362804 7	101	22	Roulement
362816 2	57	14	Maillon
362841 5	71	53	Cale
362869 3	49	24	Ressort
362973 4	113	13	Protecteur
364433 2	56	17	Arbre
364482 5	101	6	Ventilateur
364743 9	101	27	Raccord
364869 5	37	10	Rondelle
364908 9	101	4	Roulement
365018 3	101	23	Palier
365085 4	89	54	Cheville
365408 0	101	14	Joint
365830 5	53	56	Joint
366235 4	95	62	Raccord
366239 2	43	19	Bride
366298 6	35	17	Bouchon
366299 8	35	1	Bouchon
367308 0	100	15	Clips
367373 7	93	32	Support
367683 4	95	77	Bague
367684 6	95	69	Clips
367685 8	95	68	Ecrou
367923 4	17	1	Valve
368090 8	21	4	Levier
368253 4	57	15	Pignon
368445 1	106	11	Rivet
368484 3	115	7	Outillage
368582 1	26	57	Fixation
368724 3	42	21	Manomètre
370002 7	72	1	Circlips
370003 9	97	73	Circlips
370004 1	101	1	Circlips
370007 7	45	45	Circlips
370009 1	66	6	Circlips
370011 6	97	35	Circlips
370012 8	78	8	Circlips
370013 0	45	54	Circlips
370018 0	59	27	Circlips
370024 3	88	49	Circlips
370434 2	89	39	Tube d'alimentation
370647 3	93	13	Crochet
370949 3	53	58	Disque de variateur
370950 6	53	59	Bague
371222 4	3	1	Courroie
371883 4	91	4	Grille
372044 7	95	22	Elément
372045 9	98	41	Elément
372109 5	36	46	Rondelle spéciale
372110 8	36	44	Rondelle spéciale
372198 2	35	13	Couvercle
372380 9	109	1	Pneu
372381 1	109	2	Chambre à air
372630 0	7	19	Plaque
372843 1	6	21	Moyeu
373374 7	95	63	Joint
373604 6	95	70	Huile réfrigeration
373678 1	36	28	Mâchoire
373815 3	35	11	Joint
373816 5	35	9	Joint
373817 7	35	3	Joint
373868 4	73	5	Fixation
374180 7	57	7	Pignon
374342 1	93	29	Axe
374412 0	63	5	Agitateur

https://michelroger.be 252

Part No. Numéro	Group Groupe	Fig. Rep.	Description
374418 2	26	11	Connexion
374503 3	108	49	Circlips
374504 5	107	34	Ecrou
374535 0	63	10	Etanchéité
374616 2	76	15	Renforcement
374792 4	50	31	Roulement
374818 0	22	5	Transmission
374819 2	22	21	Panneau de controle
374834 4	31	11	Axe
374888 6	108	4	Vis
374889 9	59	20	Vis
374892 6	88	23	Vis à collet carré
374904 3	35	10	Couvercle
375109 8	60	39	Etanchéité
375297 5	45	38	Cheville
375421 0	54	15	Disque
375644 2	87	13	Indicateur de vide
375707 6	50	28	Reteneur
375778 5	95	76	Bouchon
375779 7	95	75	Bague d'étanchéité
375780 0	95	74	Bague d'étanchéité
375781 2	95	73	Bouchon
375782 4	95	72	Joint
377583 6	95	71	Elément refroidisseur
375804 2	13	11	Joint
376817 0	72	62	Cale
377009 8	26	42	Minuterie
377419 7	101	21	Tôle
377495 7	112	26	Tôle
377951 5	7	18	Entretoise
378056 8	48	39	Vis
378075 8	81	4	Support
378243 5	111	17	Rondelle
378244 7	110	2	Rondelle
378245 9	100	22	Rondelle
378246 1	77	32	Rondelle
378247 3	13	5	Rondelle
378248 3	6	25	Rondelle
378273 8	75	10	Joint
378632 0	28	30	Vérin
378663 5	97	30	Couvercle
378757 4	27	30	Réservoir
378840 1	37	50	Bouchon
378841 3	27	34	Raccord
378856 4	42	22	Réservoir
378857 6	104	18	Support
378989 5	59	40	Courroie
378999 6	96	34	Support
379172 5	81	61	Couvercle
379247 4	108	18	Support
379386 8	56	36	Tringle
379401 2	108	38	Pièce de retenue
379543 2	31	7	Tension
379663 6	31	28	Distributeur
379674 9	47	23	Pignon
379772 7	8	32	Ressort
379807 2	35	14	Ressort
*379985 8	87	22	Etrier
380092 8	50	22	Axe
380424 3	53	4	Ecrou
380543 5	37	51	Cheville
380592 8	95	82	Valve
380737 6	36	4	Raccord
380738 8	36	3	Raccord
381095 5	95	27	Réservoir
381096 7	95	48	Valve
381097 9	95	46	Boulon
381099 3	95	47	Joint
381100 8	95	42	Ecrou
381101 0	95	43	Ecrou
381102 2	95	41	Olive
381104 6	95	39	Olive
381105 8	95	40	Raccord
381133 7	95	26	Support
381135 1	95	28	Joint
381140 2	15	16	Clip
381144 0	92	12	Collier de serrage
381145 2	91	10	Collier de serrage
381236 5	85	11	Coirroie
381336 7	50	27	Carter
381489 0	88	1	Courroie
381503 2	48	15	Cône
381508 2	48	16	Cuvette
381511 9	45	6	Couvercle
381512 1	45	46	Disque frein
381522 2	98	7	Boulon
381540 0	113	3	Levier
381689 4	48	12	Arbre
381823 0	51	5	Manchon d'accouplement
381826 9	47	40	Rondelle
381827 8	47	37	Rondelle
381828 0	47	38	Pignon
381835 5	48	3	Pignon
381856 9	48	14	Joint
381858 3	45	11	Joint
381860 8	48	4	Joint
381895 1	48	5	Joint
381934 5	47	13	Moyeu
382102 3	45	9	Circlips
382177 0	50	30	Bague

Part No. Numéro	Group Groupe	Fig. Rep.	Description
382225 3	47	14	Joint
382226 5	47	19	Joint
382228 9	46	11	Arbre
382229 1	46	13	Levier
382236 6	46	14	Fourchette
382499 2	48	24	Tôle de sureté
382503 3	48	23	Flasque
382504 5	48	31	Joint
382506 9	48	30	Couvercle
382527 3	42	52	Etrier
382528 5	101A	3	Etrier
382610 0	51	14	Axe
382611 2	51	16	Cheville
382897 6	22	17	Bague
382898 8	22	16	Guide
382948 5	48	6	Cale
382949 7	48	6	Cale
382950 0	48	6	Cale
382974 0	8	22	Glacier
382975 2	77	41	Roulement
383230 5	48	25	Couvercle
383281 2	48	17	Pignon
383418 3	26	22	Contacteur
383419 5	26	24	Clé
383912 1	95	57	Tuyau
383941 2	28	18	Boitier de direction
384222 9	8	43	Support
384259 6	47	5	Arbre
384262 3	47	10	Pingon
384305 5	95	45	Tube
384338 4	95	44	Tube
384339 6	95	49	Tube
384397 8	88	2	Courroie
384703 9	101	13	Support
384350 0	101	17	Tamis
384878 8	48	38	Couvercle
384890 4	48	2	Cône
384891 6	48	1	Cuvette
385188 6	72	39	Rondelle
385376 5	60	12	Boulon
385386 6	80	2	Etrier
385390 5	57	37	Rondelle
385754 7	36	5	Plaque
385772 5	13	9	Vis
385818 3	31	11	Axe
385872 7	115	21	Etrier
385913 5	45	53	Rondelle
385923 6	105	53	Vis
385937 5	41	▲	Kit de réparation
385963 0	80	77	Etrier
385983 5	25	30	Pivot
385985 6	97	32	Accouplement souple
386056 8	109	3	Jante
386167 3	109	2	Chambre à air
386215 6	102	40	Raccord
386287 7	48	37	Bouchon
386289 1	57	62	Tige
386537 8	97	68	Palier
386693 8	36	1	Raccord
387048 2	60	26	Peigne
387049 4	60	25	Peigne
387205 6	64	10	Arbre
387312 3	60	5	Guide
387364 2	63	18	Grille
387368 0	64	19	Couvercle
387372 9	64	29	Palier
387374 3	64	39	Palier
387449 2	66	18	Palier
387454 3	61	16	Courroie
387460 6	57	34	Courroie
387469 4	72	80	Courroie
387505 2	33	7	Pompe
387506 4	33A	*	Pochette
387512 7	31	26	Bouchon
387530 5	36	2	Joint
387565 8	66	19	Poulie
387566 0	66	13	Palier
387618 1	101	29	Tube
387627 0	66	8	Excentrique
387644 6	66	20	Ecrou
387691 5	63	2	Axe
387753 7	60	36	Contre-batteur
387759 9	72	53	Moyeu
387760 2	84	20	Roulement
387761 4	97	19	Joint
387774 1	60	29	Disque
387775 3	60	28	Disque
387783 0	89	20	Roulement
387865 4	74	19	Pignon
387892 1	75	36	Pièce de réglage
387897 1	75	7	Vis fin
387900 0	75	33	Poulie
387901 2	72	42	Palier
387903 6	75	28	Palier
387904 8	72	54	Palier
387908 6	80	33	Flasque
387914 9	66	1	Palier
387931 5	2	1	Jeu courroie
387946 6	8	8	Moyeu
387947 8	7	59	Palier

https://michelroger.be 253

Part No. Numéro	Group Groupe	Fig. Rep.	Description
387948 0	6	18	Moyeu
387949 2	61	20	Poulie
387960 6	51	8	Essieu
388009 7	108	10	Essieu
388014 2	108	26	Extension
388016 0	108	6	Extension
388017 8	51	6	Arbre
388018 0	51	7	Arbre
388032 0	38	9	Roulement
388048 3	57	56	Flasque
388060 9	81	33	Radiateur
388062 3	38	5	Moyeu
388063 5	38	8	Poulie
388068 5	57	32	Roulement
388069 7	60	23	Roulement
388074 8	74	7	Tôle
388085 1	107	8	Tôle
388090 2	107	17	Fusée
388091 4	108	33	Fusée
388096 4	108	36	Tige
388099 0	108	41	Tige
388115 6	80	1	Silencieux
388116 8	47	17	Joint
388121 9	38	37	Connecteur
388123 3	75	17	Rondelle
388142 3	81	44	Tôle
388143 5	98	27	Joint
388145 9	98	24	Support
388154 8	80	7	Echappement tube
388156 2	57	35	Flasque
388157 4	57	36	Moyeu
388158 6	57	33	Flasque
388159 8	57	57	Flasque
388176 4	70	33	Palette
388178 8	70	31	Support
388179 0	70	50	Couvercle
388182 7	70	21	Déflecteur
388191 6	70	45	Ventilateur
388250 2	33	6	Clavette
388254 0	57	64	Joint
388255 2	69	37	Disque
388280 5	69	4	Courroie
388291 8	66	21	Tige
388293 2	16	15	Arbre
388294 4	66	2	Circlips
388295 6	69	5	Flasque
388296 8	69	3	Flasque
388316 2	80	42	Support
388320 1	81	40	Support
388330 2	70	19	Tôle
388331 4	70	18	Joint
388332 6	70	5	Joint
388333 8	70	4	Tôle
388334 0	70	6	Joint
388340 3	16	6	Fourchette
388341 5	15	1	Frein à main
388354 2	67	40	Fil
388367 9	68	6	Grille
388369 3	68	5	Peigne
388399 6	70	12	Carter
388412 6	88	21	Plaque
388425 3	69	12	Ajustement
388427 7	66	9	Joint
388449 3	81	37	Manchon
388459 4	71	8	Support
388460 7	71	35	Elévateur
388476 0	10	7	Tube
388494 8	70	41	Arbre
388503 9	54	12	Disque
388504 1	54	14	Disque
388515 4	10	49	Elément
388519 2	71	26	Tôle
388528 1	71	32	Tôle
388531 8	72	43	Arbre
388532 0	72	55	Arbre
388536 8	71	27	Support
388537 0	71	3	Couvercle
388538 2	71	31	Axe
388539 4	71	30	Tôle
388541 9	71	20	Joint
388558 4	72	23	Chaîne
388563 5	71	18	Bague
388614 4	11	5	Echelle
388629 5	73	35	Tige
388650 0	36	19	Levier
388654 8	6	3	Vis
388663 7	41	65	Circlips
388669 9	58	14	Reteneur
388716 0	9	30	Levier
388717 2	9	31	Levier
388747 5	58	13	Palier
388748 7	58	20	Palier
388752 6	67	34	Caisson
388774 2	65	6	Table
388775 4	36	*	Pochette
388776 6	30	●	Pochette
388794 4	42	1	Radiateur
388797 0	8	3	Axe
388801 1	8	21	Levier
388804 7	8	19	Support

Part No. Numéro	Group Groupe	Fig. Rep.	Description
388808 5	8	28	Support
388813 6	6	14	Roulement
388814 8	6	11	Protection
388818 6	6	40	Latte
388819 8	6	41	Chaîne
388840 3	102	11	Tuyau
388843 9	67	3	Levier
388845 3	66	37	Support
388846 5	66	36	Support
388848 9	67	9	Toile
388851 6	67	30	Bielle
388852 8	65	14	Bielle
388854 2	67	37	Déflecteur
388858 0	66	28	Levier
388863 1	65	16	Support
388872 0	67	12	Rateau
388895 8	65	5	Latte
388896 0	65	4	Toile
388904 9	19	16	Tige
388907 5	37	27	Tringle
388908 7	37	58	Support
388911 4	37	48	Support
388912 6	37	52	Levier
388916 4	8	49	Arbre
388917 6	8	53	Disque
388918 8	8	48	Arbre
388927 7	66	30	Anneau
388937 8	60	22	Reteneur
388938 0	60	24	Moyeu
388942 9	66	29	Levier
388960 7	69	18	Levier
388963 3	61	27	Bague
388966 9	67	16	Toile
388968 3	105	43	Fixation
388983 5	105	5	Tôle
388984 7	106	22	Tôle
388991 2	57	20	Vis
388995 0	57	18	Support
388997 4	57	29	Levier
389000 4	57	28	Levier
389002 8	57	59	Levier
389003 0	57	58	Levier
389005 4	57	31	Palier
389017 9	106	24	Tôle
389025 6	106	25	Tôle
389108 2	56	25	Tôle
389111 9	37	35	Câble
389141 2	104	25	Support
389150 1	21	14	Levier
389152 5	21	40	Rotule
389159 9	21	22	Arbre
389163 8	21	28	Levier
389172 7	59	34	Tige
389173 9	59	51	Tige
389174 1	73	34	Tôle
389187 8	104	21	Tôle
389204 6	83	41	Support
389205 8	86	29	Support
389215 9	98	32	Support
389238 7	79	19	Toile
389240 2	79	11	Latte
389245 2	97	65	Courroie
389285 6	31	5	Support
389295 7	31	30	Support
389301 2	31	14	Tige
389304 8	36	21	Arbre
389496 3	38	22	Support
389503 0	56	18	Axe
389506 6	56	26	Joint
389507 8	56	30	Joint
389510 5	56	4	Levier
389516 7	56	23	Levier
389518 1	56	22	Levier
389519 3	56	15	Bras
389527 0	56	14	Levier
389623 4	79	20	Latte
389686 6	104	4	Tôle
389701 0	78	6	Palier
389718 5	76	55	Couvercle
389737 5	104	33	Echelle
389744 0	104	31	Tube
389776 7	106	21	Tôle
389777 9	106	41	Latte
389779 3	24	14	Joint
389793 3	61	1	Vis
389794 5	61	3	Charnière
389796 9	94	23	Axe
389817 5	78	29	Support
389860 6	105	6	Frame
389864 4	51	4	Tôle
389873 3	38	28	Support
389880 8	105	19	Couvercle
389968 4	105	57	Latte
389970 9	105	56	Joint
389993 7	76	49	Tôle
390014 6	20	8	Cheville
390015 8	37	45	Cheville
390017 2	45	27	Arbre
390022 3	45	30	Axe pivot
390027 3	15	32	Cheville

https://michelroger.be 254

Part No. Numéro	Group Groupe	Fig. Rep.	Description
390039 8	15	19	Axe
390040 1	19	24	Axe
390062 7	21	9	Axe
390089 3	56	19	Pivot
390150 4	62	13	Levier
390151 6	62	14	Levier
390152 8	62	15	Levier
390153 0	62	17	Axe
390157 8	61	10	Tige
390161 7	62	22	Levier
390167 9	62	1	Tige
390172 0	62	10	Axe
390213 8	9	12	Tôle
390218 8	8	57	Arbre
390219 0	9	26	Elévateur
390222 7	9	25	Tôle
390224 1	9	24	Tôle
390229 1	9	1	Couvercle
390260 7	76	47	Tôle
390263 3	76	56	Tôle
390265 7	76	46	Tôle
390273 4	76	21	Tôle
390293 6	9	23	Tôle
390310 4	57	16	Axe
390359 6	57	17	Chaîne
390360 9	57	13	Chaîne
390369 7	68	27	Grille D14
390370 0	68	28	Grille D16
390371 2	68	29	Grille D18
390374 8	105	31	Latte
390375 0	105	32	Toile
390376 2	105	35	Pivot
390377 4	105	38	Toile
390382 5	105	42	Support
390384 9	105	41	Support
390388 7	105	36	Couvercle
390390 2	105	33	Tôle
390492 8	106	39	Toile
390506 9	61	5	Tôle
390508 3	106	8	Tole
390520 9	60	37	Rateau
390582 9	111	3	Support
390668 1	106	40	Support
390701 3	104	38	Tôle
390715 2	110	40	Latte
390732 8	9	18	Support
390733 0	9	22	Support
390737 8	9	45	Support
390746 7	56	37	Tôle
390748 1	104	2	Tube
390749 3	104	16	Main courante
390822 9	94	14	Ecrou
390835 6	50	54	Ressort
390836 8	42	28	Raccord
390840 7	75	21	Bouchon
390897 6	100	2	Boule
391001 0	64	9	Palier
391080 6	59	45	Tendeur
391084 4	58	12	Roulement
391092 1	64	10	Arbre
391117 5	8	7	Poulie
391118 7	6	20	Poulie
391136 5	70	40	Vis
391143 0	8	62	Jeu de courroie
391145 4	42	32	Raccord
391151 7	77	39	Ressort
391230 5	102	16	Support
391234 3	54	36	Contre-batteur
391238 1	63	2	Axe
391246 8	115	20	Cale de roue
391320 6	42	24	Bourrelet d'étanchéité
391326 8	54	36	Contre-batteur
391430 9	58	29	Contre-batteur
391431 1	58	29	Contre-batteur
391432 3	58	7	Tôle
391437 3	73	41	Couvercle
391471 5	80	9	Echappement tube
391472 7	101	5	Circlips
391484 2	42	43	Tôle
391492 9	58	1	Tôle
391503 4	60	25	Peigne
391504 6	60	26	Peigne
391506 0	58	2	Tôle
391507 2	60	37	Peigne
391514 7	59	39	Levier
391530 1	60	36	Contre-batteur
391543 8	59	55	Roulement
391586 8	56	25	Tôle
391591 9	41	84	Pompe hydraulique
391601 2	67	8	Caisson
391609 8	59	49	Levier
391615 1	79	2	Vis sans fin
391650 5	61	35	Courroie
391671 9	67	19	Tôle
391890 3	66	31	Tôle
391921 0	55	13	Tige
391953 7	106	20	Support
392105 1	66	5	Joint
392106 3	66	3	Joint
392125 3	79	1	Tube

https://michelroger.be 255

Part No. Numéro	Group Groupe	Fig. Rep.	Description
392128 9	36	29	Pédale
392214 2	93	39	Tige
392258 4	105	12	Support
392290 2	71	49	Levier
392291 4	83	31	Levier
392328 3	61	6	Ressort
392329 5	72	59	Pignon
392332 2	11	3	Support
392335 8	38	2	Couvercle
392367 5	111	14	Tôle
392385 3	90	9	Bague
392455 2	39	5	Bague d'étanchéité
392459 0	78	54	Guide
392508 5	26	27	Tôle
392521 3	109	1	Pneu
392523 7	112	22	Protecteur
392529 9	51	8	Support
392530 2	108	21	Ecrou
392531 4	108	19	Vis
392629 1	36	25	Tige
392631 6	36	23	Support
392635 4	106	31	Châssis
392644 3	105	46	Joint
392680 9	59	33	Indicateur
392682 3	8	54	Poulie
392704 1	23	28	Poulie
392706 5	106	2	Support
392713 0	89	33	Flasque
392826 9	38	47	Cornière
392829 5	104	15	Support
392887 7	38	24	Support
392900 7	51	7	Arbre
392901 2	51	6	Arbre
392928 5	21	5	Levier
392932 4	5	12	Pignon
392967 7	59	38	Support
392981 7	21	25	Tige
392983 1	21	26	Tige
392985 5	21	10	Tige
393030 3	59	28	Rondelle
393043 0	19	19	Levier
393073 3	104	26	Tube
393084 6	110	41	Cornière
393086 0	110	33	Tôle
393087 2	110	39	Echelle
393089 6	110	34	Platteforme
393096 1	43	30	Support
393133 1	28	16	Adapteur
393311 9	56	14	Charnière
393318 3	75	8	Arbre
393319 5	7	6	Rondelle
393326 0	23	19	Courroie
393330 9	24	13	Plaque
393369 0	75	9	Couvercle
393374 1	77	37	Indicateur
393379 1	58	15	Disque
393423 6	70	50	Couvercle
393424 8	70	45	Boîte
393428 6	26	12	Interrupteur
393467 8	94	33	Tôle
393473 1	70	12	Boîte
393492 1	94	22	Axe
393501 2	11	13	Echelle
393505 0	66	25	Support
393507 4	70	21	Déflecteur
393519 9	81	6	Courroie
393525 2	76	49	Couvercle
393531 5	76	21	Tôle
393570 7	67	33	Support
393594 7	76	8	Tôle
393677 3	73	50	Couvercle
393694 9	74	31	Tôle
393695 1	74	33	Racleur
393697 5	74	27	Chaîne
393699 0	54	38	Câble
393706 6	73	38	Carter
393738 3	73	31	Support
393740 8	73	19	Bague
393741 0	73	8	Couvercle
393744 6	75	23	Arbre
393753 5	106	26	Joint
393759 7	70	36	Support
393760 0	70	38	Moyeu
393802 0	98	25	Amortisseur
393806 8	20	16	Support
393812 1	71	29	Tôle
393860 2	66	26	Support
393861 4	73	16	Boulon
393870 3	83	32	Support levier
393897 9	72	49	Support
393900 8	26	6	Fusible
393901 0	26	7	Fusible
393902 2	5	14	Bague
393903 4	5	15	Moyeu
393931 3	11	7	Levier
393985 6	70	38	Bague
393992 1	104	32	Ressort
394006 3	7	21	Arbre d'articulation
394016 4	43	23	Pince
394018 8	72	45	Pignon

Part No. Numéro	Group Groupe	Fig. Rep.	Description
394027 7	47	39	Roulement
394028 9	47	33	Bague
394055 6	37	14	Cheville
394068 3	63	3	Toile
394088 5	104	20	Marche
394145 7	21	31	Levier
394147 1	21	33	Arbre
394148 3	18	9	Tôle
394154 6	5	9	Palier
394181 3	24	34	Bras
394201 7	57	21	Ecrou
394202 9	57	19	Ecrou
394213 2	55	10	Joint
394217 0	55	14	Plaque
394220 7	55	21	Couvercle
394228 3	26	43	Pastille
394230 8	65	15	Support
394236 0	21	33	Arbre
394238 4	21	22	Axe
394240 9	21	10	Tige
394266 3	77	36	Support
394289 1	51	8	Support
394309 5	26	13	Couvercle
394316 0	56	37	Latte
394329 7	107	15	Roulement
394330 0	55	13	Axe
394331 2	67	16	Toile
394336 2	55	21	Couvercle
394345 1	69	34	Couvercle
394359 0	47	8	Bague
394361 5	47	6	Bague
394362 7	38	39	Bague
394363 9	75	32	Sécurité
394365 3	58	29	Latte du batteur
394366 5	58	29	Latte du batteur
394368 9	58	2	Tole
394369 1	58	1	Latte
394372 8	30	35	Raccord
394373 0	31	22	Raccord
394374 2	27	58	Raccord
394385 5	76	6	Couvercle
394389 3	58	7	Couvercle
394394 4	105	6	Boulon
394399 4	67	12	Peigne
394401 1	65	6	Caisson
394417 4	67	8	Caisson
394426 3	7	10	Jeu de courroie
394463 1	51	21	Châssis
394464 3	105	18	Châssis
394468 1	47	3	Joint
394478 2	76	43	Tôle
394480 7	63	3	Toile
394484 5	28	38	Etrier
394487 1	54	13	Disque
394493 4	67	4	Extension
394506 3	70	6	Joint
394507 5	70	33	Latte de ventilateur
394514 0	70	41	Axe
394519 0	9	23	Tôle
394521 5	9	1	Couvercle
394532 8	105	43	Latte
394549 3	67	24	Levier
394550 6	66	16	Axe
394553 2	67	19	Couvercle
394600 3	28	30	Vérin hydraulique
394601 5	105	12	Support
394604 1	105	32	Toile
394605 3	105	38	Joint
394608 9	105	35	Tige
394609 1	105	36	Couvercle
394613 0	105	45	Tôle
394619 2	105	33	Tôle
394626 7	54	36	Coutre-batteur
394629 3	105	17	Rondelle
394630 6	105	17	Rondelle
394631 8	108	62	Rondelle
394637 0	106	33	Renforcement
394640 7	106	22	Rondelle
394641 9	105	5	Tôle
394648 3	5	11	Protection
394650 8	5	34	Latte de chaîne
394653 4	9	44	Protecteur
394654 6	9	18	Support
394656 0	67	34	Caisson
*394657 2	9	51	Cornière
394660 9	9	12	Tôle
394674 8	107	12	Boulon
394675 0	5	35	Chaîne
394686 3	106	8	Couvercle
394700 5	7	48	Axe
394701 7	7	49	Axe
394734 6	98	30	Bourrelet d'étanchéité
394745 9	57	16	Axe
394753 6	76	42	Tôle
394758 6	107	18	Tige
394762 5	107	2	Essieu
394763 7	67	37	Tôle
394768 6	108	11	Bague
394794 2	106	3	Couvercle
394836 2	68	11	Filet

Part No. Numéro	Group Groupe	Fig. Rep.	Description
394840 1	80	58	Raccord
394849 9	14	12	Cheville
394850 2	14	9	Rondelle
394851 4	14	8	Roulement
394852 6	14	7	Rondelle
394854 0	14	2	Commutateur
394855 2	14	1	Bague
394858 8	73	50	Couvercle
394862 7	68	5	Fixation
394894 4	68	6	Grille
394911 2	24	37	Support
394927 5	25	11	Stop
394945 3	25	24	Contact
394958 0	17	23	Tube
394959 2	17	25	Tube
394960 5	17	27	Tube
394961 7	17	26	Tube
394962 9	17	24	Tube
394963 1	18	3	Tube
394964 3	18	2	Tube
394967 9	70	46	Tige
394968 1	69	22	Charnière
394970 6	69	23	Tige
394973 2	69	28	Levier
394985 7	109	3	Jante
394988 3	107	18	Tringle
394993 4	107	2	Essieu
394999 6	69	19	Tige
395019 1	28	14	Raccord hyd.
395023 0	42	7	Tube
395024 2	42	6	Tube
395026 6	42	12	Tube
395153 5	22	23	Ressort
395156 1	68	27	Grille
395158 5	68	28	Grille
395160 0	68	29	Grille
395176 3	22	2	Levier
395183 8	112	24	Tôle
395184 0	113	10	Tôle
395186 4	112	21	Tôle
395187 6	113	14	Tôle
395188 8	112	15	Support
395202 0	69	42	Support
395213 3	69	43	Tôle
395273 9	22	10	Support
395311 1	97	10	Tuyau
395313 5	72	81	Chaîne
395318 5	55	1	Tôle
395319 7	55	1	Couvercle
395321 2	104	16	Tube
395324 8	104	22	Support
395391 9	48	22	Cale
395392 1	48	22	Cale
395393 3	48	22	Cale
395394 5	66	27	Bague
395444 2	28	38	Etrier
395448 0	109	4	Valve
395458 1	96	11	Boule
395472 1	102	28	Raccord
395501 4	54	2	Palier
395517 7	54	36	Contre batteur
395518 9	69	33	Clavette
395533 1	38	42	Moteur hydrostatique
395558 3	58	17	Disque
395566 0	68	9	Tige
395622 0	57	70	Tuyau
395623 2	57	69	Tube
395634 5	110	23	Support
395748 6	81	19	Tube
395779 1	95	35	Raccord
395782 8	29	12	Raccord
395826 2	90	51	Bague
395889 4	98	34	Bouchon
395900 0	7	41	Cale
395901 2	88	50	Rondelle
395924 0	28	■	Kit de joints
395925 2	29	*	Kit de joints
395928 8	28	▲	Kit de joints
395955 5	59	18	Courroie
395956 7	95	32	Pince
395957 9	95	31	Pince
395963 2	47	16	Pignon
395964 4	50	58	Pignon
395965 6	50	59	Pignon
395966 8	50	1	Arbre
395969 4	26	54	Support
395970 7	81	59	Support
395971 5	26	46	Câble
395997 3	59	25	Poulie
395998 5	59	29	Poulie
395999 7	59	9	Poulie
396000 3	59	22	Poulie
396006 5	60	9	Palier
396013 0	59	11	Levier
396015 4	59	3	Tige
396016 6	95	29	Vis
396024 3	27	■	Kit de joints
306079 8	64	23	Palier
396103 1	104	36	Charnière
396111 8	73	36	Support

https://michelroger.be 256

Part No. Numéro	Group Groupe	Fig. Rep.	Description
396115 6	38	35	Arbre
396116 8	47	35	Pignon
396117 0	47	30	Rondelle
396118 2	38	51	Bague
396120 7	47	26	Pignon
396121 9	47	22	Bague
396135 8	47	32	Roulement
396136 0	47	28	Roulement
396137 2	47	24	Roulement
396138 4	47	36	Circlips
396141 1	10	52	Protection
396142 3	11	6	Chaîne
396143 5	75	22	Clavette
396159 8	90	12	Etrier
396160 1	90	11	Ecrou
396161 3	90	13	Boulon
396175 2	91	5	Conduite
396199 2	52	1	Pneu
396200 7	52	1	Pneu
396254 0	61	11	Frein
396269 1	37	20	Décalcomanie
396270 4	104	35	Support
396319 8	39	21	Distributeur
396323 7	30	50	Raccord
396328 7	41	11	Bouchon
396329 9	41	15	Soupape
396330 2	41	62	Carter de pompe
396332 6	41	57	Boulon
396333 8	41	58	Tourillon
396334 0	41	59	Epaisseur
396335 2	41	60	Joint torique
396336 4	41	61	Roulement
396337 6	41	69	Joint
396338 8	41	71	Couvercle
396339 0	41	72	Boulon
396341 5	41	74	Joint
396342 7	41	73	Bague d'étanchéité
396343 9	41	75	Bague d'étanchéité
396344 1	41	34	Douille
396345 3	41	48	Griffe
396346 5	41	67	Maillon
396347 7	41	24	Ressort
396348 9	41	26	Bloc cylindres
396349 1	41	30	Disque
396350 4	41	66	Plateau came
396353 0	41	*	Kit de réparation
396354 2	41	●	Kit de joints
396359 2	6	17	Ressort
396402 5	42	20	Support
396409 9	76	6	Couvercle
396411 4	76	8	Tôle
396413 8	76	13	Tôle
396415 2	69	36	Flasque
396418 8	104	39	Rondelle
396420 3	71	25	Boulon
396463 3	106	33	Support
396483 5	65	8	Joint
396501 5	28	31	Guide
396503 9	28	32	Pochette
396504 1	21	4	Levier
396505 3	68	10	Levier
396553 4	64	27	Couvercle
396559 6	110	32	Latte
396606 7	37	25	Bague entretoise
396661 3	38	32	Bouchon
396750 2	59	30	Jeu courroie
396753 8	68	23	Grille 12
396755 2	68	21	Grille 6
396756 4	68	22	Grille 9
396763 9	101	12	Arbre
396766 5	101	11	Bague
396767 7	101	7	Roue complète
396785 5	112	27	Tôle
396786 7	113	2	Tôle
396791 8	24	8	Tube
396830 2	113	4	Tôle
396831 4	10	15	Joint
396832 6	10	42	Joint
396833 8	10	48	Support
396844 1	10	14	Tôle
396863 1	59	16	Poulie
396864 3	8	18	Bague
396867 9	74	8	Couvercle
396868 1	74	22	Couvercle
396870 6	74	5	Couvercle
396923 9	53	53	Poulie
396929 1	20	17	Vérin
396930 4	20	42	Vérin
396995 0	106	34	Tube
397000 4	9	26	Plaque
397012 9	94	42	Support
397039 5	68	26	Tamis
397077 5	73	30	Support
397078 7	95	37	Tuyau
397092 7	90	33	Radiateur
397097 7	61	36	Levier
397100 6	27A	3	Poulie
397101 8	101	33	Palier
397236 3	52	3	Soupape
397275 5	97	17	Poulie

Part No. Numéro	Group Groupe	Fig. Rep.	Description
397300 0	106	39	Toile
397327 6	76	63	Joint
397340 4	75	38	Couvercle
397346 6	76	7	Tole
397349 2	17	39	Kit de joints
397360 6	94	60	Support
397368 2	73	14	Joint
397380 8	6	33	Maillon de fixation
397393 5	71	19	Vis
397405 2	66	48	Bras
397447 0	73	20	Tôle
397451 9	16	17	Support
397452 1	16	21	Support
397465 8	89	70	Fixation
397467 2	27	8	Tôle
397470 9	94	69	Support
397516 7	24	46	Tôle
397522 0	76	13	Tôle
397543 4	83	24	Support
397597 7	53	6	Axe
397605 6	53	13	Support
397608 2	53	8	Bague
397611 9	53	7	Machoire
397619 5	57	71	Rondelle
397635 9	47	42	Joint
397636 1	47	41	Couvercle
397638 5	53	5	Rondelle
397640 0	37	72	Tôle
397644 8	26	28	Axe
397647 4	112	19	Tôle
397648 6	112	6	Tôle
397649 8	112	11	Tôle
397650 1	112	12	Tôle
397740 2	53	2	Fixation
397743 8	53	9	Pièce de réglage
397856 7	72	26	Palette
397872 1	112	18	Tôle
397876 9	112	17	Balustrade
397881 0	24	4	Ressort
397886 0	68	21	Tube
397887 2	68	22	Grille
397888 4	68	23	Grille
397984 8	74	30	Palette
397985 0	57	1	Boulon
397986 2	25	40	Rondelle
398025 7	42	19	Support
398084 1	88	41	Support
398087 7	88	38	Tige
398089 1	88	25	Levier
398093 0	88	40	Indicateur
398094 2	102	15	Tube
398126 9	10	21	Tôle
398131 2	81	49	Joint
398133 6	91	20	Support
398135 0	92	18	Support
398136 2	44	5	Soupape
398137 4	88	7	Support
398201 1	25	20	Roue
398202 3	25	23	Pièce de réglage
398205 9	25	25	Support
*398222 5	26	66	Interrupteur
398225 1	24	24	Contact
398226 3	25	46	Feu
398227 5	25	31	Interrupteur
398231 4	26	47	Câble
398240 3	70	17	Guide
398258 0	67	36	Latte
398262 9	29	31	Boule d'azote
398264 3	29	31	Boule d'azote
398266 7	29	31	Boule d'azote
398267 9	29	31	Boule d'azote
398269 3	29	31	Boule d'azote
398270 6	29	31	Boule d'azote
398271 8	29	31	Boule d'azote
398272 0	74	34	Chaîne
398273 2	72	29	Chaîne
398285 7	67	35	Tôle
398361 9	24	1	Support
398384 7	104	17	Tôle
398417 8	52	1	Pneu
398428 1	109	2	Chambre à air
398438 2	54	11	Jeu de battes
398439 4	54	10	Jeu de battes
398448 3	81	50	Protection
398506 7	80	42	Support
398510 6	89	63	Raccord
398555 0	91	16	Tube
398556 2	91	11	Coude
398557 4	95	64	Coude
398560 1	50	17	Fourchette
398599 2	94	7	Tuyau
398602 1	91	14	Filtre à air
398649 9	50	12	Arbre
398650 2	20	47	Levier
398658 8	50	47	Support
398710 0	87	6	Griffe
398712 4	25	6	Support
398728 7	81	53	Bouchon
398765 5	25	19	Ressort
398766 7	110	17	Support

https://michelmoger.be 257

Part No. Numéro	Group Groupe	Fig. Rep.	Description
398774 4	78	56	Rondelle
398791 0	90	29	Raccord
398810 2	67	2	Silentbloc
398819 0	81	51	Tige
398860 7	49	35	Verin
398877 2	24	48	Lampe
398878 4	7	27	Vis
398897 4	35	15	Filtre
398949 5	97	20	Roulement
398971 2	66	23	Bras
399053 7	92	15	Elément filtrant
399059 9	50	20	Roulement
399060 2	50	19	Connexion
399107 2	112	14	Support
399115 9	68	26	Grille
399117 3	30	34	Distributeur principal
399156 5	27	44	Support
399187 0	96	29	Tige
399188 2	96	37	Levier
399193 3	104	42	Support
399194 5	83	4	Rotule
399243 0	25	15	Ampoule
399329 2	71	52	Plaque
399333 1	89	79	Tuyau
399373 9	54	37	Fil
399378 5	114	10	Décalcomanie
399386 2	78	46	Fourchette
399388 6	78	45	Axe
399397 5	105	60	Support
399588 0	77	63	Support
399591 7	77	64	Latte
399598 1	78	43	Pièce intermédiaire
399599 3	78	30	Support
399601 0	78	51	Tôle
399602 2	79	21	Renforcement
399603 4	77	49	Bague
399609 6	79	2	Tuyau de vidange
399610 9	76	53	Vis sans fin
399611 1	79	1	Tuyau de vidange
399613 5	77	50	Coude
399633 7	76	37	Tôle
399634 9	76	40	Tôle
399635 1	76	22	Tôle
399637 5	83	36	Tige
399681 8	104	19	Tôle
399684 4	104	10	Tôle
399727 6	76	35	Tôle de fond
399738 9	80	78	Support
399739 1	76	36	Tôle
399825 4	77	65	Disque
399826 6	61	61	Disque
399827 8	67	13	Dent
399871 1	72	86	Tôle
399895 1	78	23	Pignon
399955 9	98	31	Support
399986 4	30	6	Passe
399993 9	73	6	Plaque
402258 7	67	41	Barre
410006 4	45	16	Pignon
410007 6	45	15	Axe
410034 3	45	20	Pignon
410063 4	66	4	Joint
410071 1	71	50	Tôile
410087 4	61	32	Bague
410174 9	8	44	Bague
410223 4	100	1	Décalcomanie
410271 5	24	35	Bras
410272 7	24	35	Bras
410278 9	31	1	Boule
410313 5	15	41	Plaque
410349 0	77	43	Couvercle
410376 7	78	40	Prise de force
410386 8	78	47	Prise de force
410418 7	45	34	Tige
410419 9	45	48	Mécanisme
410433 9	78	32	Palier
410434 1	78	50	Bride
410445 4	77	62	Vérin
410446 6	58	30	Bague
410447 8	58	32	Cale
410462 0	59	54	Cale
410463 2	109	2	Chambre à air
410464 4	109	1	Pneu
410469 4	52	1	Pneu
410472 1	25	9	Tôle
410473 3	25	8	Interrupteur
410517 7	9	14	Couvercle
410518 9	9	13	Couvercle
410539 3	78	1	Tôle
410624 4	29	34	Douille
410668 6	84	18	Bague
410670 1	94	18	Bague
410671 3	97	17	Poulie
410672 5	94	29	Flasque
410703 2	50	26	Flasque
410704 4	50	24	Disque
410705 6	50	23	Mécanisme
410715 7	57	38	Ecrou
410779 1	61	41	Poulie
410826 2	53	25	Tige

Part No. Numéro	Group Groupe	Fig. Rep.	Description
410835 1	76	48	Support
410858 9	8	65	Support
410892 1	89	42	Support
410896 9	77	21	Courroie
410897 1	49	38	Orifice
410917 5	48	19	Boîte de traction
410918 7	48	40	Flasque
410919 9	48	7	Flasque
410920 2	48	41	Joint
410921 4	53	34	Tige
410954 3	100	16	Tige
410962 0	78	14	Chaîne
410963 2	24	27	Passe fil
410967 0	97	78	Support
410970 7	17	50	Tuyau
411002 7	26	44	Compteur
411013 2	54	39	Tôle
411014 3	54	39	Tôle
411051 0	62	6	Arbre
411055 8	76	41	Tôle
411056 0	76	38	Tôle
411057 2	76	57	Axe
411058 4	76	57	Arbre
411061 1	77	8	Support
411065 9	77	57	Support
411069 7	77	40	Levier
411072 4	77	35	Tige
411073 6	77	13	Support
411076 2	77	20	Support
411078 6	77	55	Levier
411079 8	77	54	Levier
411080 1	110	5	Support
411084 9	111	5	Protecteur
411029 5	77	30	Protecteur
411130 8	77	16	Protecteur
411132 2	61	30	Levier
411209 5	76	23	Renforcement
411270 4	106	23	Tôle
411272 8	110	9	Protecteur
411310 0	107	11	Palier
411311 2	76	19	Tôle
411313 6	77	46	Tôle
411320 1	77	61	Buselure
411324 9	114	6	Décalcomanie
411332 6	114	3	Décalcomanie
411333 3	114	11	Décalcomanie
411334 0	107	9	Arbre
411335 2	112	13	Tôle
411339 0	95	61	Flexible
411340 3	95	60	Flexible
411341 5	91	22	Collier
411349 1	105	19	Couvercle
411359 2	114	11	Décalcomanie
411360 5	114	3	Décalcomanie
411363 1	76	23	Equerre
411364 3	76	43	Tôle
411369 3	76	53	Vis sans fin
411370 6	76	42	Flasque
411378 9	51	6	Arbre de traction
411479 6	98	4	Support
411484 7	76	7	Arbre de traction
411485 9	76	12	Support
411513 0	15	37	Couvercle
411515 4	15	33	Tige
411531 8	79	12	Canevas
411543 3	38	6	Courroie
411547 1	15	20	Tôle
411556 0	49	27	Tige
411558 4	49	23	Levier
411561 1	38	10	Support
411563 5	38	16	Support
411567 3	110	14	Tôle
411568 5	110	19	Support
411569 7	110	22	Latte
411570 0	82	11	Tuyau en caoutchouc
411572 4	80	22	Axe
411573 6	80	29	Flasque
411580 1	38	11	Flasque
411678 8	106	8	Couvercle
411696 6	43	15	Flexible
411792 0	43	28	Support
411793 2	43	29	Tôle
411796 8	15	44	Support
411797 0	15	43	Protecteur
411903 7	92	19	Support
411976 0	61	45	Rondelle
411995 0	54	11	Batte
411996 2	54	10	Batte
411999 8	89	29	Bride
412005 4	7	40	Tige
412012 9	96	18	Fourchette
412031 9	74	37	Maillon
412033 3	47	49	Epaisseur
412037 1	97	43	Vis
412047 2	75	24	Clavette
412064 8	13	14	Vis
412066 2	61	7	Ecrou
412068 6	50	57	Circlips
412078 7	77	60	Cheville
412089 0	20	37	Bride

https://michelvogel.be 258

Part No. Numéro	Group Groupe	Fig. Rep.	Description
412114 5	10	45	Vis
412126 0	75	13	Ecrou
412133 5	34	14	Boulon
412134 7	96	3	Tige
412141 2	97	71	Ecrou
412150 1	8	34	Boulon
412152 5	83	6	Ecrou
412156 3	97	46	Vis
412158 7	98	6	Vis
412159 9	97	7	Boulon
412160 2	97	11	Boulon
412163 8	97	83	Boulon
412192 9	47	50	Bague
412193 1	50	14	Goujon
412210 9	21	40	Joint sphérique
412211 1	97	40	Boulon
412212 3	98	39	Boulon
412221 2	12	10	Goupille cannelée
412222 4	12	11	Goupille
412223 6	12	20	Goupille
412224 8	12	57	Goupille
412225 0	12	55	Circlip
412226 2	12	26	Circlip
412227 4	12	32	Bague-ressort
412228 6	12	59	Disque
412241 4	6	42	Clavette
412250 3	98	12	Ecrou
412254 1	57	46	Vis à oeil
412259 1	26	15	Boulon
412350 5	8	40	Boulon
412351 7	47	55	Ecrou
412352 9	47	54	Rondelle
412376 9	48	27	Goujon
412413 9	48	32	Bouchon
412414 1	19	9	Cheville
412417 7	21	29	Fourchette à deux trous
412451 9	45	52	Roulement
412466 0	7	55	Vis
412502 8	12A	27	Boulon
412503 0	12A	25	Vis
412504 2	12A	24	Vis
412505 4	12A	23	Rondelle
412506 6	12A	49	Rondelle
412510 5	12A	5	Vis
412514 3	12A	50	Circlips
412515 5	12A	61	Boulon
412516 7	12A	62	Circlips
412517 9	12A	72	Goupille
412518 1	12A	71	Goupille
412519 3	12A	69	Circlips
412520 6	12A	77	Ecrou
412521 8	12A	79	Rondelle
412522 0	12A	28	Rondelle
412523 2	12A	48	Rondelle
412527 0	27A	56	Ecrou de tendeur
412528 2	27A	57	Ferrule
412540 8	12A	3	Vis
412541 0	12A	13	Fil
412565 0	47	52	Rondelle d'épaisseur
412579 9	8	40	Boulon
412587 0	108	1	Vis à tête hexagonale
412608 2	47	49	Rondelle
412609 4	47	52	Rondelle
412610 7	97	7	Vis à tête hexagonale
412619 5	53	65	Vis à tête hexagonale
417006 1	102	35	Bouchon
417073 2	89	22	Arbre
417074 4	90	39	Coude
417075 6	90	28	Coude
417076 8	90	40	Support
417082 1	89	7	Tuyau
417086 9	93	41	Support
417100 1	53	1	Support
417115 2	11	14	Protecteur
417121 5	73	15	Tole
417154 4	93	19	Etrier
417216 6	81	48	Support
417269 7	30	33	Tôle
417279 8	17	2	Pédale
417280 1	19	6	Pédale
417291 4	112	13	Tôle
417292 6	112	16	Tôle
417299 0	108	44	Buselure
417310 6	105	45	Tôle
417313 2	32	27	Support
417345 9	67	4	Extension
417346 1	67	35	Toile
417471 6	104	6	Support
417472 8	104	4	Tôle
417575 6	61	61	Poulie
417605 1	60	11	Bague
417623 9	97	9	Support
417643 1	53	51	Courroie
417675 8	43	16	Tuyau
417696 2	70	52	Protection
417701 5	69	43	Tôle
417702 7	69	42	Support
417711 6	38	30	Tige
417785 1	74	11	Pinion
417804 3	74	10	Arbre

Part No. Numéro	Group Groupe	Fig. Rep.	Description
417814 4	95	33	Tuyau
417952 6	75	29	Roue dentée
417953 8	75	18	Roue dentée
417985 5	20	24	Ecrou
417986 7	20	30	Joint
417993 2	10	13	Support
418011 3	20	●	Kit de joints
418012 5	20	43	Tige
418013 7	20	44	Tampon
418283 8	32	23	Coude
418284 0	28	29	Coude
418285 2	29	11	Coude
418312 1	14	6	Joint torique
418407 2	94	56	Etrier
418418 5	81	33	Radiateur
418503 6	53	29	Tige
418527 6	76	17	Equerre
418530 3	76	39	Tôle
418538 9	60	2	Rondelle
418641 8	110	47	Protecteur
418668 4	76	17	Renforcement
418785 2	82	22	Etrier
418787 6	82	14	Filtre à air
418788 8	82	11	Tuyau en caoutchouc
418792 7	82	3	Couvercle
418793 9	82	2	Bol
418794 1	82	1	Couvercle
418795 3	82	16	Elément filtrant
418836 1	22	12	Câble
418837 3	22	25	Pince
418846 2	33A	8	Joint
418848 6	33A	7	Disque
418849 8	33A	▲	Kit de joints
418860 2	89	1	Echappement
418863 8	24	22	Feu
418864 0	24	21	Ampoule
418865 2	24	21	Ampoule
418869 0	24	51	Feu arrière
418870 3	24	23	Ampoule
418871 5	24	47	Feu de stationnement
418872 7	25	42	Feu-D
418878 9	24	51	Feu arrière
418881 6	49	17	Arbre
418882 8	49	15	Tige
418964 2	113	19	Support
418966 6	82	4	Grille
418969 2	82	18	Support
418970 5	82	5	Tube
418971 7	82	6	Etrier
418975 5	82	28	Support
419006 3	61	21	Support
419095 0	32	22	Raccord
419105 3	110	48	Support
419107 7	110	50	Support
419108 9	110	49	Support
419143 3	24	34	Feu
419162 3	101	19	Axe
419256 2	112	17	Support
419259 8	113	20	Protecteur
419367 7	24	16	Support
419447 7	94	49	Coude
419448 9	94	48	Tuyau
419449 1	95	25	Support
419450 4	89	78	Support
419483 3	89	9	Support
419547 9	71	22	Tôle
419548 1	71	55	Couvercle
419629 3	91	11	Coude
419637 0	13	27	Support
419643 3	112	5	Protecteur
419679 8	101	6	Ventilateur
419680 1	113	6	Tôle
419716 8	19	27	Arbre
419717 0	71	56	Pièce de retenue
419721 9	113	11	Protecteur
419738 4	105	16	Support
419743 5	90	14	Support
419749 7	24	50	Interrupteur
419758 6	24	44	Support
419785 3	76	58	Support
419793 0	96	7	Protecteur
419798 0	43	21	Support
419854 0	72	87	Rondelle
419885 5	49	18	Support
419924 9	104	3	Protecteur
419925 1	104	40	Protecteur
419950 4	87	10	Collier
419964 3	110	21	Support
419966 7	53	57	Moyeu
419968 1	53	50	Disque variateur
420077 5	90	38	Protecteur
420082 6	77	67	Bague
420137 3	93	7	Support
420138 5	89	42	Support
420139 7	104	41	Support
420145 0	81	56	Raccord
420146 2	81	54	Raccord
420204 6	75	34	Rondelle
420209 6	76	30	Couvercle
420223 8	70	51	Déflecteur

https://michelroger.be 259

Part No. Numéro	Group Groupe	Fig. Rep.	Description
420225 0	70	51	Déflecteur
420332 7	73	7	Tôle
420347 8	78	12	Pignon
420348 0	78	53	Support
420349 2	88	2	Courroie
420376 9	23	13	Protecteur
420379 5	76	65	Support
420389 6	105	60	Support
420392 3	45	31	Tôle
420409 0	38	9	Roulement à billes
420410 3	50	13	Buselure
420411 5	66	16	Arbre
420434 3	61	37	Buselure
420440 6	80	80	Protection
420442 0	101	20	Tôle
420445 6	101	8	Tamis
420451 9	38	5	Moyeu
420452 1	38	8	Moyeu
420453 3	38	11	Bride
420454 5	38	50	Bague d'écartement
420455 7	105	16	Tige
420482 4	81	28	Coude en caoutchouc
420483 6	81	39	Coude en caoutchouc
420491 3	102	32	Filtre
420493 7	105	59	Support
420505 4	9	44	Protection
420514 3	69	47	Support
420515 5	69	48	Support
420522 0	102	31	Raccord
420523 2	102	30	Tuyau
420633 5	22	24	Raccord de câble
420643 6	113	25	Protection
420831 5	19	26	Support
420856 7	53	23	Ecrou
420858 1	22	6	Support
420859 3	22	26	Support
420864 4	42	13	Raccord
420893 5	27	36	Flexible
420909 0	61	60	Support
420914 1	61	15	Guide courroie
420927 8	5	17	Ressort
421025 7	102	2	Couvercle
421070 2	102	4	Couvercle
421135 0	33A	2	Pompe hydraulique
421173 0	90	6	Courroie
421296 0	47	21	Arbre
421477 4	46	22	Fourche
421478 6	46	23	Fourche
421479 8	50	56	Fourche
421596 6	27	21	Pompe hydraulique
421597 8	27	21	Pompe hydraulique
421778 2	10	22	Support
421804 9	63	15	Secoueur
421805 1	63	15	Secoueur
421869 5	29	13	Vérin
421876 0	64	20	Tôle
421897 4	71	26	Contre-batteur
421901 5	72	38	Tambour ébarbeuse
422103 4	53	19	Ecrou
422114 7	51	20	Epaisseur
422125 8	26	1	Compteur d'heures
422140 2	102	33	Filtre
422156 5	27	*	Pochette
422159 1	105	24	Couvercle-droite
422160 4	105	23	Couvercle-gauche
422175 5	86	27	Levier
422201 2	20	*	Pochette
422204 8	102	3	Joint
422348 2	30	27	Tige
422350 7	30	28	Tige
422371 1	74	50	Vis sans fin
422373 5	72	73	Vis sans fin
422375 9	74	50	Vis sans fin
422377 3	72	73	Vis sans fin
422379 7	77	*	Pochette
422380 0	49	*	Pochette
422385 0	102	1	Réservoir
422405 4	42	23	Support
422424 4	71	21	Tôle latérale
422438 3	53	6	Arbre
422568 8	64	40	Tige
422572 7	110	42	Pièce de fermeture
422634 9	56	35	Suspension
422746 6	98	18	Alternateur
422768 2	50	49	Tôle
422769 4	90	22	Ventilateur
422772 1	90	23	Poulie
422785 8	101	6	Ventilateur
422839 3	24	51	Feu rouge arrière
422866 0	81	14	Support
422891 3	101	32	Arbre
422892 5	81	3	Protecteur
422895 1	81	58	Support
422896 3	81	10	Support
423015 8	90	10	Support
423088 1	26	58	Câble de moteur
423089 3	26	58	Câble de moteur
423273 4	47	53	Roulement
423362 3	47	11	Roulement
423475 2	47	18	Flasque

Part No. Numéro	Group Groupe	Fig. Rep.	Description
423608 5	103	5	Support
423610 0	76	24	Support
423618 6	77	7	Support
423669 3	23	11	Support
423749 3	16	9	Câble de frein
423750 6	15	9	Câble de frein
423756 8	67	44	Tôle
423757 0	67	44	Tôle
423763 3	47	34	Bague
423848 3	17	1	Pédale
423849 5	20	5	Pédale
423891 4	55	20	Etanchéité
423892 6	55	20	Etanchéité
423918 3	10	53	Protecteur en caoutchouc
423967 5	32	28	Buselure
423996 6	49	42	Orifice
424012 3	76	34	Tôle de fond
424013 5	76	34	Plaque de fond
424076 7	82	17	Tôle
424143 0	67	44	Tôle
424253 3	77	31	Plaque
424254 5	78	26	Tôle
424320 6	97	79	Support
424366 2	101	3	"V" poulie
424404 4	90	43	Support du radiateur
424405 6	81	43	Support du radiateur
424525 0	32	8	Conduite
424583 2	22	19	Guide
424601 2	7	60	Support
424739 3	102	32	Filtre
424816 7	106	7	Hotte à paille
425093 4	105	61	Bride
425159 4	60	45	Tôle
425191 2	23	10	Levier
425192 4	23	2	Tringle
425254 6	52	1	Pneu
425261 1	95	7	Support du radiateur
425266 1	61	59	Etrier
425306 7	56	5	Levier
425345 9	110	18	Protection
425346 1	111	19	Protection
425460 3	106	14	Tringle
425461 5	106	20	Pièce de fixation
425463 9	26	49	Batterie
425560 5	102	34	Tuyau
425589 5	109	2	Chambre à air
425592 2	109	1	Pneu
425601 3	26	58	Câble de moteur
425640 5	10	1	Balustrade
425645 5	76	32	Protecteur
425697 4	73	52	Protection
425698 6	71	43	Protection
425740 7	10	12	Plate-forme de conduite
425877 6	106	7	Crochet
425909 5	94	66	Poulie
425910 8	88	6	Poulie
425961 5	112	28	Décalcomanie
426022 6	69	24	Tôle
426026 4	110	8	Protection
426027 6	110	10	Support
426028 8	110	3	Support
426034 1	61	52	Support
426052 9	37	73	Décalcomanie
426057 9	110	7	Protection
426061 8	88	3	Poulie
426073 3	67	17	Bourrelet d'étanchéité
426182 4	60	44	Disque
426206 6	113	24	Tôle
426207 8	113	18	Tôle
426208 0	111	14	Protecteur
426210 5	54	19	Clavette
426211 7	60	27	Clavette
426214 3	88	6	Poulie
426221 8	54	20	Arbre
426222 0	54	20	Poulie
426224 4	58	11	Arbre
426225 6	58	11	Arbre
426238 3	104	5	Protecteur
426297 7	10	35	Buselure
426303 2	10	33	Cornière
426305 6	10	31	Couvercle
426310 7	10	34	Ressort
426325 8	7	32	Ressort de compression
426366 4	67	42	Grille
426371 5	67	42	Grille
426374 1	60	30	Arbre
426397 9	27	37	Conduite hydraulique
426488 2	34	35	Soupape
426489 4	34	5	Plongeur
426490 7	34	6	Soupape
426491 9	34	26	Boulon
426492 1	34	3	Ressort
426494 5	34	8	Sphère
426496 9	34	●	Pochette de pièces
426497 1	34	*	Pochette de pièces
426498 3	34	31	Tige de réglage
426544 2	60	30	Carter
426599 7	16	23	Grippe
426619 1	111	6	Protection
426625 4	27	61	Support

https://michelanger.be 260

Part No. Numéro	Group Groupe	Fig. Rep.	Description
426630 5	56	27	Arbre d'articulation
426717 9	23	16	Flasque
426732 1	88	16	Tôle
426734 5	55	19	Tube
426735 7	56	42	Rondelle
426761 2	68	14	Arbre
426792 7	23	15	Guide
426801 8	89	76	Axe
426815 7	17	9	Plaque
426845 2	63	22	Recouvrement
426846 2	63	23	Recouvrement
426932 5	29	28	Cheville
426933 7	29	17	Cheville
426949 0	63	3	Canevas
426950 3	63	16	Tôle
426983 2	27	●	Support
426984 4	27	21	Pompe
426995 7	68	13	Grille
426998 3	68	13	Grille
426999 5	68	12	Grille
427000 1	68	13	Grille
427001 3	67	42	Grille
427002 5	68	13	Grille
427003 7	89	11	Support
427018 8	6	39	Jeu de 3 chaînes
427048 1	7	56	Moyeu
427049 3	8	56	Moyeu
427078 4	8	35	Buselure
427082 2	7	38	Arbre de suspension - g.
427083 5	8	37	Arbre de suspension - dr.
427126 7	9	11	Recouvrement d'élévateur
427127 5	9	11	Recouvrement d'élévateur
427138 2	99	14	Huile réfrigération
427178 6	97	29	Flasque
427210 6	97	33	Flasque
427226 9	97	22	Arbre
427232 2	87	21	Support
427246 1	63	16	Tôle
427252 4	75	41	Tôle d'étanchéité
427315 8	23	27	Guide
427417 4	102	36	Tuyau
427445 3	113	22	Support
427446 5	113	23	Support
427448 9	10	27	Tôle anti-glisser
427453 0	31	9	Arbre
427454 2	31	2	Levier
427503 7	86	28	Tige
427577 2	98	22	Radiateur
427580 9	98	8	Mano
427581 1	102	34	Conduite
427705 5	16	22	Protection
427774 0	13	41	Buselure
427775 2	13	40	Rondelle
427776 4	97	47	Douille
427810 8	98	16	Poulie
427822 3	92	29	Joint
427825 9	92	28	Flasque
427826 1	92	17	Courbe
427827 3	92	16	Tube
427829 7	98	47	Joint
427832 4	98	45	Entrée
427833 6	98	9	Bague
427834 8	98	10	Bague
427915 0	97	1	Echappement
427921 3	88	6	Poulie
427929 9	97	41	Support
427970 6	98	36	Support
427972 0	98	36	Support
427975 6	55	19	Tôle
427985 7	105	29	Support
427986 9	105	47	Support
428002 6	48	43	Rondelle butée
428004 0	17	48	Support
428007 6	77	64	Plat
428009 0	77	63	Support
428051 9	98	28	Support
428261 4	57	75	Ecrou
428262 6	57	43	Ecrou
428263 8	57	44	Ressort
428329 8	13	42	Buselure
428346 4	13	8	Axe
428347 6	13	12	Axe
428349 0	13	37	Tôle
428351 5	13	33	Support
428428 8	13	39	Pédale
428429 0	13	30	Boule
428827 4	57	5	Volant
428829 8	57	77	Arbre
428834 9	56	43	Support
428853 9	10	43	Boîte
428880 6	26	16	Brosse
429330 2	53	60	Arbre
429378 2	98	43	Raccord
429623 3	19	26	Levier
429646 1	26	45	Tableau de bord
429789 3	49	5	Leviers
430015 7	26	8	Connecteur
430347 0	10	40	Décalcomanie
430356 9	32	24	Pince
430357 1	49	33	Pince

Part No. Numéro	Group Groupe	Fig. Rep.	Description
430363 4	13	17	Protection
430364 6	13	18	Protection
430367 2	13	16	Protection
430433 3	44	9	Transmission
430435 7	38	40	Flasque
430436 7	45	10	Logement des freins
430437 1	50	2	Buselure-lisse
430513 3	47	7	Roue dentée
430515 7	47	27	Roue dentée
430516 9	47	31	Roue dentée
430517 1	47	9	Roue dentée
430575 3	31	10	Charnière
430606 0	98	29	Tôle
430661 6	47	2	Flangette
430695 7	45	5	Logement des freins
430755 5	99	13	Joint
430756 7	99	18	Support
430772 1	46	18	Arbre de vitesse
430773 3	50	60	Arbre de vitesse
430783 4	44	8	Bourrelet d'étanchéité
430800 2	16	15	Arbre
430801 4	50	3	Bourrelet d'étanchéité
430870 9	113	17	Support
430888 6	16	17	Support
430889 8	16	21	Support
430891 3	45	25	Levier
430897 5	52	1	Pneu
430936 9	45	8	Bague
430937 1	44	3	Couvercle
430944 6	46	6	Goujon
430945 8	46	1	Goujon
430946 0	46	4	Goujon
430964 8	47	51	Buselure
431056 4	105	59	Toile
431057 6	105	44	Toile
431058 8	105	58	Tôle
431059 0	105	58	Tôle
431088 1	45	3	Goujon
431112 4	18	18	Cylindre de frein
431220 3	72	13	Arbre
431234 2	27A	20	Amortisseur
431351 0	102	21	Pince
431352 2	97	56	Bride de tension
431363 5	100	29	Levier
431364 7	100	20	Support
431368 5	97	42	Support de moteur
431380 1	92	11	Courbe
431411 8	97	61	Nipple
431415 6	91	16	Tube
431485 3	13	26	Embrayage
431842 1	65	17	Canevas
431843 3	65	7	Canevas
431844 5	65	7	Canevas
431888 7	10	32	Câble
431911 8	98	21	Flexible
431912 0	85	44	Flexible
431941 1	49	41	Support
431942 3	32	17	Support
431988 9	45	13	Axe differentiel
431989 1	45	44	Axe differentiel
432002 2	97	48	Flexible
432017 3	93	10	Levier
432023 6	93	23	Tige
432026 2	20	15	Levier
432027 4	20	14	Ressort de traction
432029 8	89	53	Support
432030 1	95	9	Support
432042 6	13	13	Protection
432067 8	106	51	Circlips
432086 8	91	17	Courbe
432097 1	91	29	Support
432243 2	10	51	Tôle
432244 4	10	50	Support
432249 4	74	58	Bague d'arrêt
432275 9	103	6	Protection
432276 1	103	12	Protection
432332 1	50	4	Logement d'embrayage
432343 4	20	27	Réservoir
432351 1	12	1	Siège
432352 3	12	2	Dossier
432353 5	12	3	Ressort
432354 7	12	4	Ressort
432355 9	12	5	Boulon
432356 1	12	6	Boule
432357 3	12	7	Levier
432358 5	12	8	Ressort
432359 7	12	9	Fixation
432364 8	111	13	Protection
432376 3	12	12	Châssis
432377 5	12	13	Levier de commande
432378 7	12	14	Levier
432379 9	12	15	Levier
432380 2	12	16	Levier
432381 4	12	17	Arc
432382 6	12	18	Ressort
432383 8	12	27	Guide
432384 0	12	19	Buselure
432385 2	12	21	Ressort
432386 4	12	22	Ressort
432387 6	12	23	Tige

https://michelroger.be 261

Part No. Numéro	Group Groupe	Fig. Rep.	Description
432388 8	12	24	Pièce de glissement
432389 0	12	25	Boulon
432390 3	12	28	Guide
432391 5	12	29	Disque de glissement
432392 7	12	31	Boulon
432393 9	12	33	Tôle
432394 1	12	34	Châssis
432395 3	12	35	Châssis
432396 5	12	36	Ressort
432397 7	12	37	Tôle
432398 9	12	38	Arc
432399 1	12	39	Protection
432400 6	12	40	Amortisseur
432401 8	12	41	Buselure de palier
432402 0	12	42	Boulon
432403 2	12	43	Pignon
432404 4	12	44	Ecrou
432405 6	12	45	Arrêt
432406 8	12	46	Pignon
432407 0	12	47	Poignée de réglage
432408 2	12	48	Disque
432409 4	12	49	Arbre
432410 7	12	50	Buselure
432411 9	12	51	Buselure de palier
432412 1	12	52	Boulon
432413 3	12	53	Roulement
432414 5	12	54	Amortisseur
432415 7	12	56	Disque
432416 9	12	61	Accoudoir
432420 8	26	45	Tableau de bord
432490 5	86	7	Pièce d'articulation
432492 9	100	21	Levier
432495 5	100	28	Tige
432520 0	10	23	Balustrade
432522 4	10	24	Balustrade
432562 8	10	12	Plate-forme de conduite
432563 0	97	12	Joint
432566 6	13	49	Joint
432567 8	13	21	Protection
432583 2	37	67	Bouton
432588 2	17	23	Tube
432589 4	18	14	Tube
432590 7	18	15	Tube
432591 9	20	33	Tube
432592 1	20	21	Tube
432596 9	21	39	Tôle
432621 4	26	19	Bouchon
432626 4	26	26	Tôle
432628 8	21	11	Support
432629 0	21	11	Support
432631 5	13	38	Support
432632 7	13	35	Support
432635 3	99	5	Flexible
432636 5	99	20	Plaque de fixation
432638 9	81	39	Courbe
432639 1	81	28	Courbe
432642 8	81	6	Courroie
432665 6	102	34	Tube
432666 9	75	16	Flasque
432695 9	75	8	Arbre
432726 6	26	58	Tôle
432729 2	26	45	Câble du moteur
432730 5	26	45	Tableau
432737 9	10	2	Balustrade
432745 6	93	24	Joint sphérique
432748 2	10	46	Arbre
432749 4	10	46	Arbre
432755 7	37	4	Ressort
432756 9	83	21	Tôle
432772 3	96	25	Câble
432773 5	93	25	Câble
432796 3	49	13	Tige
432805 4	31	13	Tige
432808 0	76	31	Protection
432809 2	37	1	Tôle charnière
432814 3	49	4	Protecteur
432816 7	37	63	Protecteur
432817 9	49	8	Protecteur
432819 3	30	13	Leviers
432820 6	37	62	Protecteur
432826 8	76	20	Tôle
432827 0	76	66	Tôle
432829 4	98	11	Courroie
432831 9	6	10	Axe
432837 1	37	61	Brosse
432838 3	37	26	Tige de réglage
432839 5	37	16	Indicateur
432840 8	37	5	Buselure
432847 2	37	64	Support
432849 6	37	65	Guide
432851 1	37	22	Support
432855 9	37	68	Guide
432858 5	37	3	Support
432861 2	37	69	Butée
432865 0	37	66	Tôle
432868 6	37	7	Levier
432899 1	37	59	Charnière
432907 0	30	1	Manomètre
432945 0	76	66	Tôle
432992 9	30	4	Tube

Part No. Numéro	Group Groupe	Fig. Rep.	Description
432993 1	30	10	Tube
433006 1	42	48	Pince
433007 3	43	31	Pince
433008 5	102	21	Pince
433020 1	76	62	Couvercle
433085 7	5	10	Axe
433087 1	76	61	Tôle
433097 2	32	20	Pince
433099 6	42	46	Support
433100 1	43	32	Support
433101 3	102	22	Support
433108 7	30	46	Conduite flexible
433132 8	25	10	Connecteur
433190 0	18	22	Arbre
433191 2	18	20	Ecrou
433192 4	18	23	Pochette
433201 5	57	74	Bague
433202 7	57	45	Plaque
433225 5	20	31	Nipple
433244 5	26	20	Passe fil
433262 3	76	67	Joint
433273 6	14	11	Ressort
433329 2	96	33	Collier
433317 0	87	17	Manchon de raccordem.
433318 2	87	11	Courbe
433325 7	84	12	Joint
433331 0	37	71	Rondelle
433377 6	55	11	Bac à pierres
433378 8	55	11	Bac à pierres
433382 7	76	61	Tôle
433414 6	91	16	Tube
433514 8	13	25	Entraîneur
433515 0	13	28	Entraîneur
433519 8	54	36	Contre-batteur
433520 1	54	36	Contre-batteur
433529 9	10	44	Protection
433553 0	32	33	Frein
433554 2	32	34	Pince
433614 0	21	12	Bouton
433615 2	21	12	Bouton
433629 1	50	61	Joint
433630 4	48	42	Bague
433659 4	74	47	Tôle
433665 7	75	16	Flasque
433676 0	24	53	Tube
433755 8	84	84	Support
433756 0	84	10	Tuyau
433758 4	84	1	Echappement
433873 8	9	50	Levier
434008 6	32	26	Support
434095 9	28	21	Pince
434096 1	28	22	Support
434097 3	49	10	Pince
434099 7	43	1	Support
434101 4	42	31	Conduite hydraulique
434102 6	27	56	Pince
434103 8	27	43	Plat
434104 0	28	24	Support
434105 2	28	25	Pince
434108 8	28	10	Support
434109 0	43	2	Conduite hydraulique
434110 3	28	50	Support
434119 1	43	3	Conduite hydraulique
434182 4	101	35	Bague
434240 8	45	22	Differentiel
434241 0	45	14	Differentiel
434256 1	27	59	Plat
434330 9	77	72	Couvercle
434529 0	25	48	Contact de pression
434707 8	83	9	Tige
435070 8	76	14	Vitrine
435114 2	77	70	Support
435352 6	13	31	Cheville d'articulation
435364 1	76	54	Protecteur
435372 8	86	14	Tube
435378 0	96	26	Support
435468 1	26	63	Claxon
435484 5	93	5	Support
435485 7	83	18	Support
435486 9	100	7	Support
435493 4	76	33	Couvercle
435498 4	103	10	Support
435499 6	103	11	Couvercle
435728 3	59	3	Tige
435913 6	83	23	Tige
436086 2	56	10	Secteur
436146 0	114	9	Décalcomanie
436173 7	10	55	Bouchon
436304 6	85	11	Courroie d'alternateur
436320 0	85	16	Poulie
436338 7	25	50	Raccord
436357 7	47	25	Bague
436358 9	47	27	Pignon
436422 6	46	19	Jeu d'étanchéité
436457 9	47	23	Pignon
436458 1	47	31	Pignon
436459 3	47	38	Pignon
436488 4	102	37	Courbe
436582 4	69	11	Goujon
436709 4	83	26	Support

https://michelroger.be 262

Part No. Numéro	Group Groupe	Fig. Rep.	Description
436778 9	87	16	Tube
436836 3	102	34	Conduite
437024 3	112	23	Réflecteur
437033 2	59	30	Tube
437059 6	99	22	Protecteur
437354 2	93	44	Levier
437422 7	24	10	Tôle
437423 9	24	11	Joint
437592 6	42	21	Manomètre
437604 3	54	40	Poulie
437605 5	54	44	Arbre
437607 9	54	49	Courroie
437649 7	24	7	Support
437650 0	24	9	Mirroir
437682 7	102	25	Conduite
437683 9	102	30	Conduite
437699 2	102	33	Tamis
437706 9	42	21	Mano
437716 0	24	2	Tube
437717 2	24	2	Tube
437764 1	17	45	Arbre
437765 3	17	46	Ecrou
437766 5	17	47	Fourche
437767 7	17	44	Pochette
437768 9	18	25	Arbre
437769 1	18	24	Ecrou
437771 6	18	26	Pochette
437773 0	7	62	Canevas
437777 8	45	22	Differentiel
437778 0	45	14	Differentiel
437786 7	100	27	Levier
437811 2	95	79	Bague d'étanchéité
437817 4	95	81	Nipple
437841 5	26	18	Bouton
437842 7	26	17	Bouton
437869 3	47	34	Bague de raccord
437870 6	47	25	Bague de raccord
437904 9	10	41	Tube
437974 6	54	48	Support
438097 7	70	53	Latte de ventilateur
438121 0	114	5	Décalcomanie
438139 7	77	50	Coude
438419 1	48	12	Flasque d'entraînement
438420 4	48	19	Boîte
438781 8	50	12	Arbre
438900 2	95	78	Soupape
438901 4	95	80	Bague d'étanchéité
438902 6	95	49	Tube
439060 1	9	44	Protecteur
439116 0	10	50	Support
439178 0	5	34	Latte de chaîne
439181 7	6	40	Latte de chaîne
439288 3	29	▲	Kit de joints
439289 5	29	■	Pochette de pièces
439303 7	37	71	Joint
439304 9	49	12	Tôle
439322 7	37	17	Support
439323 9	37	65	Support
439388 5	37	66	Support
439430 6	102	41	Support
439511 8	109	1	Pneu
439513 2	109	1	Pneu
439518 2	109	1	Pneu
439684 3	57	36	Moyeu
439876 0	79	19	Toile en caoutchouc
440001 0	115	9	Outil
440002 2	115	8	Outil
440006 0	115	5	Clé
440009 6	115	2	Clé
440010 9	115	1	Clé
440011 1	115	13	Tournevis
440012 3	115	17	Pince
440014 7	115	18	Pompe
440784 8	46	18	Arbre
441020 1	7	59	Palier
441072 0	87	3	Pré-filtre à air
441397 8	10	54	Support
441465 3	97	84	Raccord
441587 1	7	26	Tringle
441792 6	50	22	Cheville
441794 0	50	20	Roulement butée
441981 7	108	26	Pièce d'extension
441990 6	108	10	Essieu de direction
442271 3	57	18	Tôle
442340 7	27A	39	Bride de serrage
442353 7	20	46	Ressort
442354 9	50	24	Disque d'embrayage
442355 1	50	23	Disque d'embrayage
442360 2	50	12	Arbre
442368 8	50	19	Palier
442534 0	50	4	Demi-carter d'embrayage
442542 8	50	26	Arbre avec bride
442543 0	50	4	Demi-carter d'embrayage
442570 7	110	48	Support
442711 7	58	34	Bague
442806 8	110	50	Support
442891 7	110	46	Protection
443076 0	107	42	Rondelle
443511 4	99	19	Support
443536 6	41	68	Axe de commande

Part No. Numéro	Group Groupe	Fig. Rep.	Description
443898 2	75	27	Roulement
444009 0	84	77	Etrier
444030 5	104	15	Support
444036 7	104	19	Protecteur
444037 9	104	10	Protecteur
444186 4	73	31	Support
444331 3	73	38	Elévateur de grain
444447 8	110	49	Support
444450 5	110	47	Protection
444597 5	26	19	Tôle
444791 7	9	11	Caisson de convoyeur
444792 9	9	11	Caisson de convoyeur
444800 8	59	34	Tige
444828 6	26	58	Câble de moteur
444920 2	20	22	Conduite hydraulique
444921 4	20	35	Conduite hydraulique
444922 6	20	41	Conduite hydraulique
444934 1	53	51	Courroie trapézoïdale
444935 3	53	51	Courroie trapézoïdale
444936 5	53	52	Courroie trapézoïdale
445033 2	42	54	Nipple
445050 8	75	41	Tôle d'étanchéité
445064 7	75	7	Vis sans fin
445067 3	73	15	Partie supérieure d'élévateur
445369 3	108	27	Palier-lisse
445371 8	10	17	Ressort
445397 6	108	56	Couvercle
445399 6	108	47	Moyeu
445400 1	10	48	Support
445401 3	10	48	Support
445405 1	20	5	Levier
445438 0	48	19	Transmission
445439 2	48	30	Couvercle
445497 4	48	31	Etanchéité
445728 5	21	20	Flangette
445763 9	108	48	Boulon de roue
445780 5	76	8	Tôle
446023 2	58	29	Latte dentée
446024 4	58	29	Latte dentée
446025 6	58	29	Latte dentée
446026 8	58	29	Latte dentée
446390 9	15	43	Protecteur
446392 3	81	62	Douille
*446470 1	20	27	Réservoir
*446471 1	20	27	Réservoir
446860 6	109	3	Jante
446861 8	109	3	Jante
446887 2	12A	21	Entretoise
446888 4	12A	22	Support-gauche
446889 6	12A	29	Tuyau
446893 5	12A	12	Tôle
446897 3	12A	9	Entretoise
446898 5	12A	6	Support-droite
446902 6	12A	14	Arbre d'articulation
446910 3	12A	31	Guide
446912 7	12A	30	Guide
446913 9	12A	41	Protection
446914 1	12A	42	Bouchon
446915 3	12A	38	Support
446916 5	12A	43	Arbre
446917 7	12A	44	Buselure
446918 9	12A	45	Charnière
446919 1	12A	46	Arbre
446920 4	12A	47	Buselure
446921 6	12A	51	Rouleau
446922 8	12A	52	Tôle
446923 0	12A	53	Ressort
446924 2	12A	54	Tôle
446925 4	12A	55	Arbre
446926 6	12A	56	Charnière
446927 8	12A	39	Plat
446928 0	12A	40	Couvercle
446929 2	12A	60	Amortisseur
446930 5	12A	65	Cheville
446931 7	12A	64	Profil
446932 9	12A	63	Tôle
446934 3	12A	76	Ressort
446935 5	12A	75	Capot
446936 7	12A	74	Rouleau
446937 9	12A	67	Ressort
446938 1	12A	68	Bouchon
446940 6	12A	80	Rondelle
446941 8	12A	70	Bouton
446942 0	12A	73	Support
446943 2	12A	78	Roulement
446944 4	12A	59	Bouchon
446945 6	12A	58	Fourchette
447026 9	34	■	Pochette
*447177 8	102	42	Support
447240 3	27A	61	Raccord
447241 5	27A	58	Raccord
447288 3	33A	1	Pompe hydraulique
447340 5	84	42	Support de moteur
447406 5	27A	59	Filtre à huile
447407 7	27A	60	Elément filtrant
447513 2	27A	55	Tube hydraulique
447611 0	89	42	Support de moteur
447945 7	27A	64	Support
448041 2	5	41	Pignon
448042 4	5	10	Arbre

https://michelroger.be 263

Part No. Numéro	Group Groupe	Fig. Rep.	Description
448043 6	6	10	Arbre
448134 9	81	63	Tuyau
448174 3	110	52	Plat
448175 5	110	51	Plat
448186 8	102	14	Raccord
448346 8	101A	1	Pré-filtre à air
448366 0	84	87	Protection
448404 2	10	50	Support
448434 5	12A	8	Tube
448435 7	12A	20	Tôle
448436 9	12A	16	Profil
448437 1	12A	7	Boule
448438 3	12A	2	Séparateur
448439 5	12A	1	Accoudoir
448440 8	12A	19	Profil de protection
448441 0	12A	4	Support
448442 2	12A	57	Support
*448443 4	12A	18	Coussin de siège
*448444 6	12A	15	Dossier
448445 8	12A	17	Tôle
448517 7	12A	18	Coussin de siège
448518 3	12A	15	Dos de siège
448689 4	12A	66	Indicateur
448716 3	38	50	Distance d'écartement
448724 0	106	24	Tôle-droit
448725 2	106	25	Tôle-gauche
448730 3	38	8	Poulie
448859 5	42	20	Pince
448860 8	27A	71	Etrier
448916 7	105	59	Support
449027 3	7	44	Tube
449083 1	6	20	Poulie
449084 3	8	54	Poulie
449103 5	41	■	Kit de joints
449161 7	27A	48	Raccord
449223 9	106	7	Hotte à paille
449224 1	106	7	Hotte à paille
449256 8	13	13	Console
449260 7	9	14	Couvercle
449261 9	9	13	Couvercle
449564 1	9	24	Capot-droit
449565 3	9	25	Capot-gauche
449583 1	103	15	Support
449584 3	103	10	Support
449618 6	12A	91	Châssis de siège
449619 8	12A	90	Siège complète
*449627 5	12A	90	Siège
449669 3	101A	2	Conduite
449792 4	107	17	Fusée
449793 6	107	16	Fusée
449815 4	101A	6	Pince
449816 6	101A	5	Fond
449817 8	101A	4	Grille
449855 8	27A	73	Réservoir d'huile
449884 9	42	57	Raccord de connexion
449915 6	42	23	Support
449916 8	42	19	Support
449961 3	35	18	Réservoir d'huile
449962 5	99	20	Support
449973 8	114	4	Décalcomanie
450044 2	88	48	Protection
450073 3	26	63	Interrup. signal d'alarme
450140 6	114	8	Décalcomanie
450141 8	114	7	Décalcomanie
450191 3	7	62	Canevas
450320 8	7	26	Goujon
450329 6	27A	70	Etrier
*450409 0	38	9	Roulement à billes
450417 3	101A	16	Filtre à air
450420 0	38	9	Roulement à billes
450463 0	50	23	Disque d'embrayage
450464 2	50	12	Arbre
450481 8	38	5	Moyeu
450482 0	38	11	Bride
450573 3	54	36	Contre batteur
450583 4	55	11	Bac à pierre
450584 6	114	7	Décalcomanie
450594 7	27A	30	Coude
450595 9	114	8	Décalcomanie
450596 1	114	7	Décalcomanie
*450628 0	54	36	Contre-batteur
450652 1	35	25	Bague
450663 4	35	23	Bague d'étanchéité
450679 7	80	32	Accouplement
450685 0	35	22	Couvercle
450688 6	27A	40	Support
450689 8	113	1	Tôle
450698 7	27A	33	Conduite flexible
450740 8	80	42	Support de moteur
450788 8	114	2	Décalcomanie
450873 9	101A	13	Tuyau flexible
450878 9	80	1	Silencieux
450970 5	27A	32	Conduite flexible
451019 0	101A	18	Support
451020 3	101A	15	Support
451022 7	101A	17	Conduite d'échappement
451024 1	101A	11	Tuyau d'extension
451027 7	101A	14	Etrier
451029 1	101A	17	Conduite d'échappement
451050 6	42	58	Support

Part No. Numéro	Group Groupe	Fig. Rep.	Description
451086 1	101A	11	Tuyau d'extension
451088 5	101A	18	Support
451089 7	101A	17	Conduite d'échappement
451102 7	108	18	Support
451264 9	27A	37	Support
451271 4	33A	3	Pompe hydraulique
451393 2	9	11	Caisson de convoyeur
451394 4	9	11	Caisson de convoyeur
451481 9	61	16	Courroie
451556 8	27A	72	Conduite flexible
451557 0	27A	69	Conduite flexible
451558 2	27A	68	Conduite flexible
451619 2	52	4	Chambre à air
451651 0	5	14	Bride
451691 4	84	86	Bracket
452096 3	26	65	Décalcomanie
452097 5	26	65	Décalcomanie
452098 7	26	65	Décalcomanie
452179 9	76	2	Charnière
452204 4	63	26	Couvercle
452309 6	90	5	Alternateur
452470 7	9	44	Protection
452493 5	42	31	Tuyau hydraulique
452497 3	42	53	Tuyau hydraulique
452723 4	9	49	Support
453177 6	52	1	Pneu
453396 0	37	51	Cheville
454113 3	88	41	Support
454372 1	50	20	Roulement de butée
454401 4	67	45	Plaque
454772 9	63	25	Sécoueur à paille, arrière
454773 1	63	24	Sécoueur à paille, avant
455011 8	38	42	Moteur hydrostatique
455012 0	39	5	Clapet de sécurité
455021 9	37	27	Tige de connexion
455031 0	27A	61	Raccord
455106 9	5	10	Arbre
455139 8	27A	59	Filtre de huile
455140 1	52	4	Chambre à air
455141 3	52	4	Chambre à air
455144 9	52	4	Chambre à air
455173 0	39	19	Guide du piston
455321 5	37	50	Bouchon
455328 9	37	48	Levier
455509 3	24	13	Plaque
455564 9	63	24	Sécoueur à paille, avant
455565 1	63	25	Sécoueur à paille, arrière
455864 5	35	19	Bouchon du filtre
455914 2	15	39	Disque de frein
455927 9	52	2	Pneu
455929 3	52	2	Pneu
455930 6	52	2	Pneu
455931 8	52	2	Pneu
455934 4	52	2	Pneu
456012 1	36	45	Raccord
*456014 5	36	47	Bouchon
456025 8	106	55	Support
456027 2	106	54	Support
456028 4	106	53	Support
456029 6	106	52	Support
456080 4	43	28	Support
456142 6	26	49	Batterie
456143 8	26	49	Batterie
456162 8	50	3	Bourage
456187 0	97	33	Bride
456331 7	47	4	Roulement
456468 6	94	57	Couvercle
456472 5	29	31	Accumulateur
456473 7	35	21	Elément filtrant
456478 7	27A	73	Réservoir à huile
456510 7	19	18	Rondelle
456524 6	29	31	Accumulateur
456525 8	29	31	Accumulateur
456526 0	29	31	Accumulateur
456527 2	29	31	Accumulateur
456528 4	29	31	Accumulateur
456560 2	54	38	Compte-tours
456639 9	47	21	Arbre de pignons de commande
456648 8	38	40	Flasque
456649 0	50	4	Logement d'accouplement
456665 4	47	4	Roulement à billes
456744 2	44	9	Boîtier nu
456836 7	81	64	Support
456856 9	107	2	Essieu de direction
456857 1	107	2	Essieu de direction
457046 3	85	50	Support
457214 0	48	30	Couvercle
457728 9	12A	38	Tôle de support
457729 1	12A	60	Amortiseur de choc
457730 4	12A	57	Support
457731 6	12A	66	Indicateur
457732 8	12A	70	Poignée
457733 0	12A	58	Fourchette
457879 8	60	48	Latte
457881 3	60	48	Latte
458888 8	101A	15	Support
460071 1	63	19	Grille
470013 1	24	20	Ampoule
470016 7	25	43	Lampe
470017 9	24	49	Lampe

https://michelroger.be 264

INDEX

Part No. Numéro	Group Groupe	Fig. Rep.	Description
470020 6	24	19	Lampe
470023 2	24	45	Réflecteur
470030 7	26	22	Contacteur
470033 3	26	33	Commutateur
470041 0	25	33	Contacteur et ressort
480247 8	66	33	Ecartement
481491 6	54	30	Support
481494 2	60	17	Plaque
481560 3	63	8	Plat d'étanchéité
481595 6	72	27	Tôle
481730 4	68	16	Barre
482006 0	70	22	Vis
482282 4	45	28	Charnière
482300 4	15	40	Plateau
482301 6	15	38	Plateau
482305 4	56	39	Tôle
482319 3	24	38	Support d'articulation
482744 4	5	7	Rondelle
484361 4	93	43	Attache
484756 1	99	2	Clip
484811 9	70	47	Indicateur
485978 2	93	9	Tôle
486087 4	62	18	Tige
487060 9	60	36	Câble
487828 7	61	58	Rondelle
488131 1	9	6	Entrêtoise
488940 6	73	45	Fermeture
514098 2	39	65	Joint
514967 5	26	50	Relais
539140 2	15	23	Ressort
554195 6	13	43	Rondelle
554516 8	109	1	Pneu
605529 7	64	46	Courroie
*740589 7	68	30	Toile d'étanchéité
*740590 0	68	31	Latte de fixation
*740647 1	68	30	Toile d'étanchéité
*740686 3	68	31	Latte de fixation
*742042 0	85	40	Moteur Fiat 8361 SI 10
743381 0	114	8	Décalcomanie
743382 2	114	12	Décalcomanie
743655 1	91	20	Support
746949 7	115	16	Aërosol, peinture jaune
746950 0	115	15	Peinture jaune
746951 2	115	15	Peinture jaune
746952 4	115	15	Peinture jaune
746953 6	115	15	Peinture jaune
747420 8	9	44	Protection
748036 4	60	47	Toile
748037 6	60	47	Toile
748076 8	48	30	Couvercle
748150 6	37	7	Levier de commande
748245 7	56	25	Profile
748271 2	84	78	Support
748272 4	84	86	Support
*748277 4	67	41	Barre de grille
*748961 5	48	10	Ecrou de roue
750186 5	24	35	Arbre
750187 7	24	35	Arbre
*750208 3	42	59	Décalcomanie
*750802 3	9	12	Tôle
*750804 7	9	12	Tôle
751022 0	14	8	Roulement de butée
*751098 9	90	52	Support
753041 2	79	12	Toile
753146 4	106	39	Toile
753147 6	106	39	Toile
753271 9	31	9	Poignée
753272 1	31	10	Articulation
753273 3	36	29	Pédale
*753455 9	60	26	Peigne à dents
*753456 1	60	25	Peigne à dents
*754422 1	17	23	Conduite hydraulique
*754529 7	20	49	Conduite hydraulique
*754530 0	30	■	Kit de joints
*754992 8	9	23	Tôle
*913340 6	69	12	Bloc de réglage
*913354 9	87	14	Filtre à air complet
*913355 1	87	4	Tamis d'aspiration
*913888 0	17	49	Etrier
*916250 2	85	16	Poulie
*916265 3	84	88	Support
*916303 8	73	56	Couvercle
*916338 8	73	15	Partie supérieure d'élevateur
*916529 3	30	34	Distributeur principal
*916863 1	5	10	Arbre
*918126 1	9	14	Couvercle
*918127 3	9	13	Couvercle
*918128 5	9	25	Couvercle
*918129 9	9	24	Couvercle
*918279 4	6	39	Chaîne
*918281 9	6	41	Chaîne d'élevateur
*918297 2	8	38	Tôle
*918299 6	8	37	Tôle
*918394 8	84	9	Support
*918525 7	84	1	Silencieux
*918622 3	84	10	Conduite d'échappement
*918623 5	86	20	Tuyau de support
*918624 7	86	28	Tige de connexion
*918634 8	87	27	Flexible en caoutchouc
*918766 7	110	48	Support

INDEX

Part No. Numéro	Group Groupe	Fig. Rep.	Description
*918767 4	110	50	Support
*918768 1	110	47	Protection
*918812 6	56	30	Plaque
*919437 1	6	10	Arbre
*919770 7	114	13	Décalcomanie
*920228 1	102	30	Tuyau à combustible
*922092 4	48	44	Bague
*922246 1	84	89	Rondelle d'étanchéité
*922426 3	7	56	Moyeu
*922427 5	8	56	Moyeu
*922659 6	84	84	Support
*922660 9	84	86	Support

http://michelroger.be 265

APPENDIX TO INDEX

Part No. Numero	Group Groupe	Fig. Rep.	Description
421866 9	72	92	Goupille
452114 3	32	21	Cylindre hydraulique
9508580 5	38	53	Buselure
9508805 3	32	*	Pochette
9512098 8	45	46	Disque frein
9512703 3	9	51	Cornière
9512983 5	5	16	Rondelle
9513272 9	114	14	Décalcomanie
9513500 4	15	21	Levier
9513501 6	15	20	Support
9514319 0	12A	92	Support

Michel ROGER

GROUP **199**

DEALER – DISTRIBUTOR INFORMATION ONLY
RECOMMENDED INITIAL PARTS STOCK

https://michelroger.be 266

DEALER — DISTRIBUTOR INFORMATION ONLY
RECOMMENDED INITIAL SERVICE PARTS STOCK

Part Number	Description	Qty. for 5 mach. 8070	8080
025194 4	Coupler link	10	10
025805 1	Roller link	10	10
025816 4	Offset link	10	10
025953 4	Bearing	5	5
034439 5	Ball bearing	10	10
040241 4	Coupler link	10	10
040242 6	Offset link	10	10
043048 7	Flange	5	5
043278 4	Roller link	10	10
100016 0	Hex. nut	50	50
100020 9	Hex. nut	5	5
100042 5	Coupler nut	10	10
100043 7	Coupler nut	10	10
150014 6	Ferrule	10	10
150015 8	Ferrule	10	10
150017 2	Nipple	5	5
150018 4	Nipple	5	5
160164 5	Hydraulic hose	1	1
167266 8	O Ring	5	5
170006 3	Key	2	2
170010 2	Key	2	2
170011 4	Flat key	5	5
170030 4	Key	2	2
170047 9	Key	2	2
170052 0	Key	1	1
180035 6	Spring	2	2
210032 7	Ball bearing	2	2
210033 9	Bearing	5	5
210034 1	Ball bearing	2	2
210039 1	Bearing	2	2
210043 0	Bearing	5	5
210049 2	Ball bearing	5	5
212606 6	Bearing complet	1	1
220011 5	Seal ring	2	2
220061 0	Felt ring	5	5
220062 2	Seal ring	10	10
220063 4	Felt ring	5	5
230028 2	Roller link	5	5
230029 4	Connector link	2	2
230151 3	"V" belt	2	2
270064 6	Sprocket	2	2
290119 7	Pulley half	2	2

DEALER — DISTRIBUTOR INFORMATION ONLY
RECOMMENDED INITIAL SERVICE PARTS STOCK

Part Number	Description	Qty. for 5 mach. 8070	8080
290122 4	Pulley half	2	2
308278 4	Offset link	4	4
308450 0	Felt ring	5	5
310045 5	Cover	1	1
310046 7	Bearing housing	4	4
310048 1	Cover	1	1
310049 3	Bearing cover	4	4
310051 8	Bearing cover	4	4
310067 1	Cover	2	2
310131 8	Bearing cover	4	4
320557 2	Bearing	2	2
321204 6	Grease fitting	30	30
321559 7	"V" belt normal speed	2	
323787 2	Grease fitting	5	5
323913 1	Concave wire	50	50
325103 6	Ball bearing	6	6
325106 2	Bearing	4	4
325110 1	Bearing	2	2
326440 1	"O" ring	4	4
327187 4	Seal ring	2	2
327232 1	"O" ring	2	2
330291 0	Wheel bolt	5	5
332038 6	Grease fitting	10	10
334054 2	Spring	1	1
334970 4	Chain idler	2	2
335005 0	Hydraulic hose	2	
335136 7	Ferrule	10	10
335137 9	Wheel bolt spacer	5	5
335169 6	Ferrule	20	20
336945 3	Wheel nut	10	10
337475 7	Hex. nut	50	50
338009 1	Hydraulic hose	1	1
350114 0	Journal bearing assy.	1	1
350418 4	Chain	1	1
350679 6	Ball joint	1	1
356025 7	"V" belt	1	
357295 9	Spring	6	6
387506 4	Seal kit	2	2
362403 7	Spring	1	1
362801 1	Cltuch half	10	10
371222 4	"V" belt	2	
378989 5	"V" belt	2	2
381489 0	"V" belt	2	2

https://michelroger.be 267

DEALER — DISTRIBUTOR INFORMATION ONLY
RECOMMENDED INITIAL SERVICE PARTS STOCK

Part Number	Description	Qty. for 5 mach. 8070	8080
381512 1	Brake disc	2	2
384397 8	"V" belt	2	2
385376 5	Hex. cap screw	100	100
387460 6	"V" belt	2	2
387469 4	"V" belt	2	2
387931 5	Sets of 2 belts		1
388068 5	Trust bearing	1	1
388069 7	Bearing	2	2
388280 5	"V" belt	2	2
388775 4	Seal kit	1	1
388819 8	Elevator chain compl.		1
389245 2	"V" belt	2	2
391084 4	Bearing	1	1
391143 0	Sets of 2 belts		1
391650 5	Power belt		1
392459 0	Chain support	3	3
392932 4	Sprocket	3	3
393326 0	"V" belt	2	2
393519 9	"V" belt OM 401		1
394018 8	Pinion	2	2
394363 3	Clutch half	10	10
394426 3	"V" belt	2	
394630 6	Washer	10	10
394675 0	Elevator chain compl.	1	
395313 5	Chain	1	1
395394 5	Rubber bushing	2	2
395925 2	Seal kit	2	2
395955 5	"V" belt	2	2
396079 8	Bearing housing	2	2
396750 2	Set of 2 belts	2	
397349 2	Seal repair kit	1	1
397856 7	Paddle	20	20
397984 8	Paddle	20	20
398438 2	Rasp bar set		2
398439 4	Rasp bar set		2
398810 2	Rubber bushing	6	6
410704 4	Clutch plate	1	
410896 9	"V" belt	2	2
410962 0	Chain	1	1
411543 3	Powerband	1	1
441995 0	Rasp bar set	2	
411996 2	Rasp bar set	2	

DEALER — DISTRIBUTOR INFORMATION ONLY
RECOMMENDED INITIAL SERVICE PARTS STOCK

Part Number	Description	Qty. for 5 mach. 8070	8080
412031 9	Attachment link	2	2
412241 4	Key	2	2
412527 0	Coupler nut	5	5
412528 2	Ferrulle	5	5
417643 1	"V" belt Low speed	1	
417785 1	Sprocket	2	2
418312 1	Seal	2	2
418846 2	Seal ring	2	2
418849 8	Seal kit	2	2
420893 5	Hydraulic hose	1	1
421173 0	"V" belt OM 352	2	
422379 7	Seal kit	1	1
424525 0	Hydraulic hose	2	2
426397 9	Hydraulic hose	1	1
432027 4	Hydraulic hose		2
432829 4	Set of 2 belts Aifo-Fiat engine	1	
437033 2	Set of 2 belts	2	2
439178 0	Lath	5	
441794 0	Thrust bearing	1	1
442354 9	Clutch plate		1
444934 1	"V" belt - Low speed		2
444935 3	"V" belt - Normal speed		2
444936 5	"V" belt - Ground speed		2
445050 8	Seal ring	2	2
447241 5	Nipple	2	2
447401 5	Filter element	2	2
447407 7	Filter element	5	5
448041 2	Sprocket		1
449161 7	Connector	5	5
449816 6	Screen	2	2
450594 7	Elbow	5	5
450698 7	Hydraulic hose	2	2
450970 5	Hydraulic hose	2	2
451481 9	Power band	2	2

https://michelroger.be 268

NEW HOLLAND

QUALITY PARTS

497108 3 - DEC. 1986 - 1250 + 500

PRINTED IN BELGIUM

https://michelroger.be 269